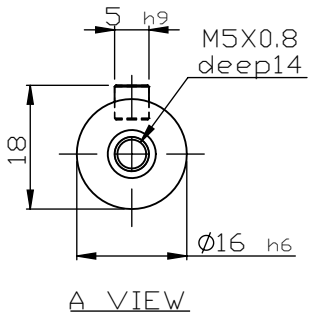

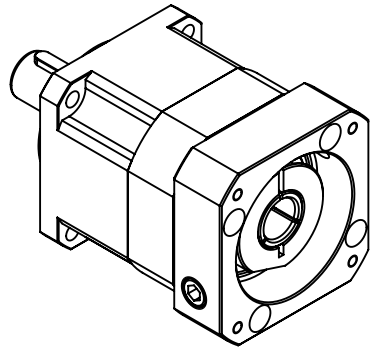

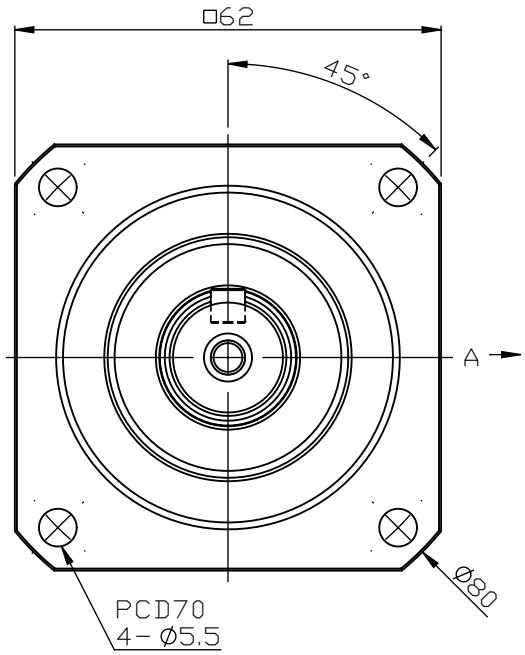

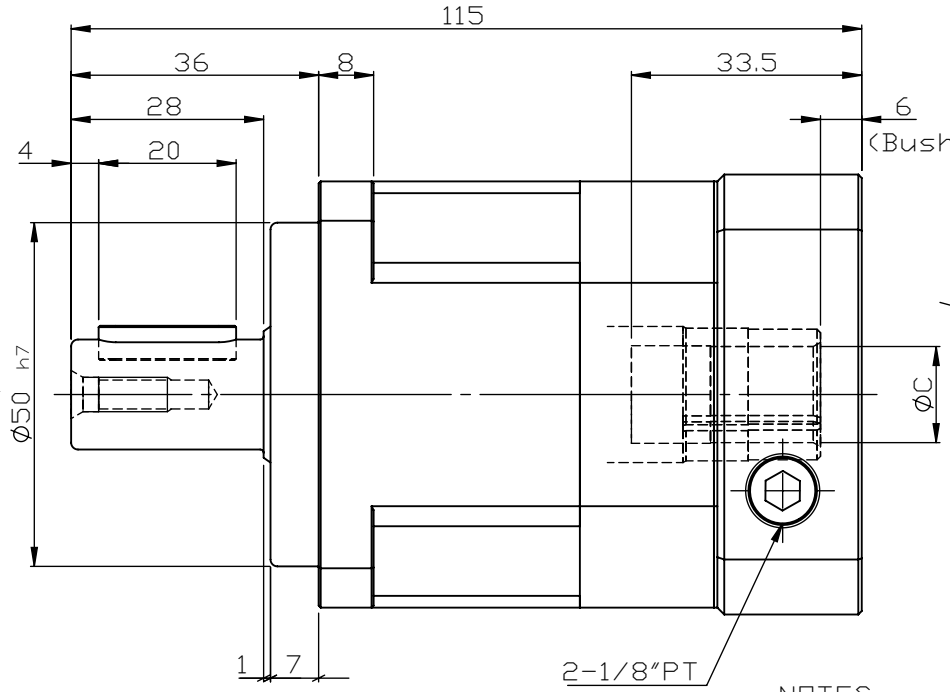

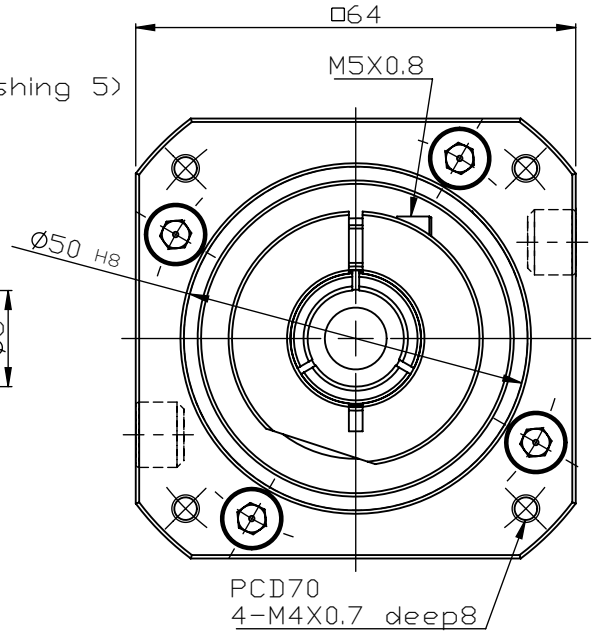

NOTES

1. Flange: 7MP62A-50-A2
2. Output shaft have keyway, without keyway is optional.
3. Bushing is supplied to input bore Ø6.35, Ø8, Ø10, Ø11 or Ø12.
4. ØC: Ø14.

LIMING LI MING MACHINERY CO., LTD.	VARIETY OUTLINE DIMENSION	POWER 100W~400W		APPROVED	DATE	NO	REVISION	REVISER	DATE
	DRAWING NO. SB62-1-50M4	PATH		EXAMINED	DATE				
TITLE Planetary Gearhead SERVOBOX	MODEL SB62	STAGE 1	VERSION 01	CHECKED	DATE				
	RATIO 3,4,5,6,7,8,9,10	UNIT mm		DRAWN MIN-LING	DATE 2011/5/30				

D:\epdm\lmpdm\solidworks\lm7\as\sb-se\