ONGUARD®

800 System

Modular Special Hazard Safety Controls

INPUT VOTE module



Model 1530 Input Module is a primary detector module that accepts two independent dry relay contacts from initiating devices. This module can vote between its local two input channels as well as other Input Vote Modules, requiring the combination of up to four valid alarms to confirm the alarm condition. The voting configuration can trip the Alarm, Release and Relay Modules based on DIP switch settings.

Inputs are individually monitored for a fault condition. A fault will be announced with its respective yellow fault LED and will activate the Fault Module. The detector power output fuse is monitored and rated at 3A.



FEATURES

- Module can occupy same rack as three channel model 1440 Input Module
- Accepts two independent inputs applicable to any dry input contact device, such as optical, smoke, or heat detectors
- Optional time delays are adjustable from 0 to 15 seconds for each input
- Auxiliary form C fire relay can be independently voted
- Relay is selective for latching or non-latching
- Memory feature allows alarm LED to remain on during alarm, and blinks when alarm clears
- Input voting capability has independent control transferred to Alarm Module and Release Module
- Recessed detector test switch option able to source or sink current
- Individual open collector outputs for each channel operate in failsafe mode
- Detector fused power output and reset switch
- All field wiring supervised per NFPA requirement

REPRESENTED BY:

ALLESTEC CORPORATION

810 RUSSELL PALMER ROAD KINGWOOD, TEXAS 77339
P.O. BOX 6092 KINGWOOD, TEXAS 77325
PHONE: 281-359-1519 FAX: 281-359-2085
ALLESTEC.COM

CE

SPECIFICATIONS

ELECTRICAL

Approved operating voltage:	20 - 28 VDC redundant power sources
Operating current:	30mA quiescent, 54mA alarm
Detector power source fuse rating:	3 amps
Dry relay outputs:	5 amps, 30 VDC resistive, 250 VAC Output relay sealed and contains an inert gas Auxiliary fire relay is customer selective for latching or non-latching Relay is form C configuration

MECHANICAL

Size:	1.04”W X 3.46”H X 6.4”D
Weight:	3.7 ounces

ENVIRONMENT

Ambient operating temperature:	0 degrees F to 150 degrees F, -17 degrees C to 65 degrees C, 90% humidity non-condensing
Packaging and exposure:	NEMA 1

PART NUMBER	DESCRIPTION
800-1530	Input Module
800-1211	End of line resistors, 2 supplied
800-1378	Test switch rod
800-1186	System manual

TYPICAL WIRING

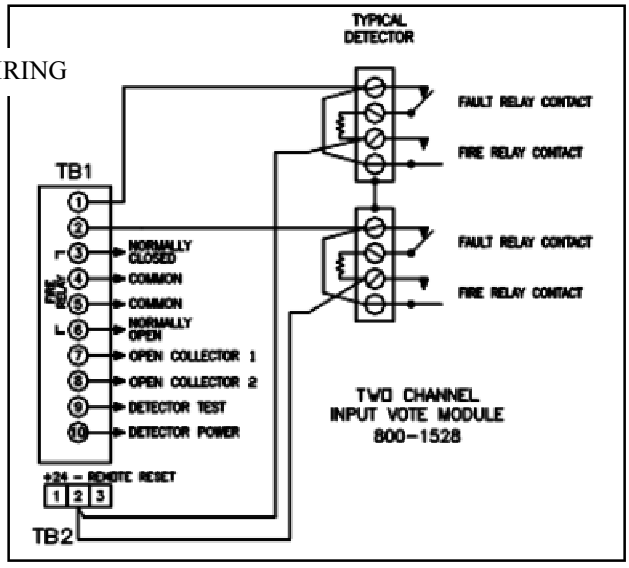

© 2013 ALLESTEC CORP.