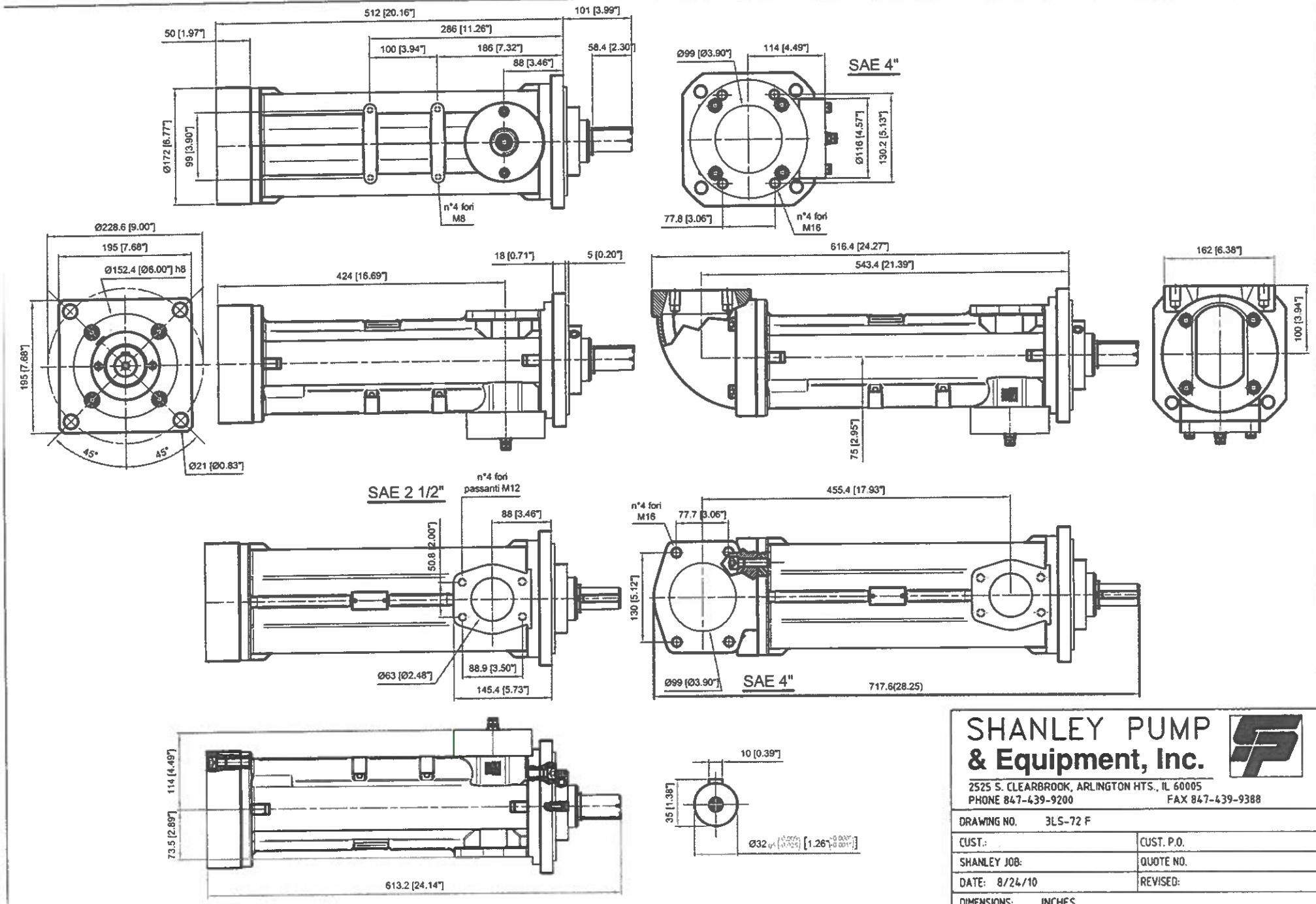

SHANLEY PUMP
& Equipment, Inc.

2525 S. CLEARBROOK, ARLINGTON HTS., IL 60005
PHONE 847-439-9200 FAX 847-439-9388

DRAWING NO. 3LS-72 F	
CUST.:	CUST. P.O.
SHANLEY JOB:	QUOTE NO.
DATE: 8/24/10	REVISED:
DIMENSIONS: INCHES	
DRAWN BY: MURALI	CERTIFIED BY: