Pressure-Operated Siren

Description

The pressure-operated siren is used to warn personnel of a system discharge. The siren operates upon pilot container activation and continues to sound through most of the discharge time.

A pipe hanger or bracket must be installed within 1 ft (0.3 m) of the siren.

Component	Material	Approvals
Siren	Body: Brass Grille: Steel Screen: Stainless Steel	UL Listed (EX-2968); Listed for use with FM Approved systems

Shipping Assembly Part No.	Description
437616	Pressure-operated siren

The design requirements are as follows:
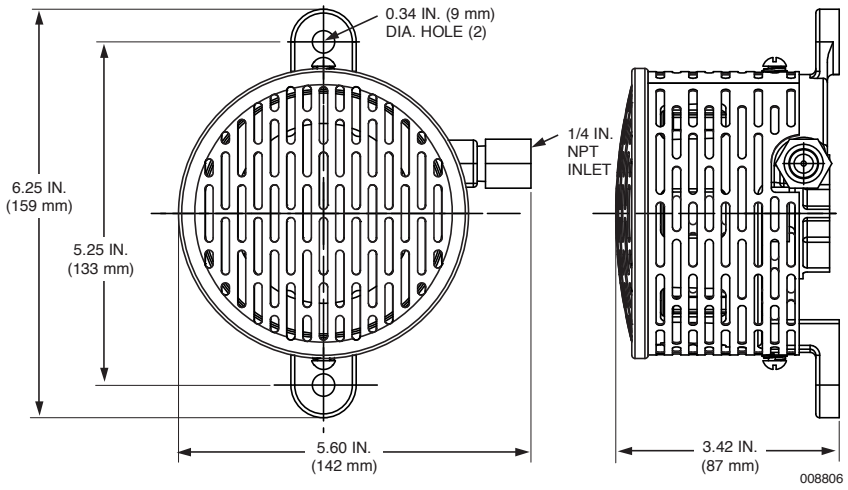
- Maximum Pipe Length:
  - 240 ft (73.2 m) of 3/4 in. Schedule 40 pipe
  - 430 ft (131.1 m) of 1/2 in. Schedule 40 pipe
  - 675 ft (205.7 m) of 3/8 in. Schedule 40 pipe
- Maximum Sirens: 5
- Maximum Elbows: 30
- Flow Rate: 14.4 lb/min (65 kg/min)
- If siren is not located in hazard area, include agent flow and quantity through siren in system design