USER'S MANUAL

Rev. 01/2024

REVO C 2PH

THE CONNECTING UNIT

from 30A to 40A

020

M-RC2-30-40



CD Automation S.r.l.
Via Picasso, 34/36 - 20025 Legnano (MI)- Italy
Tel. +39 0331 577479 - Fax +39 0331 579479
E-mail: info@cdautomation.com - Web: www.cdautomation.com

Declaration of conformity

Declaration of conformity-Dichiarazione di Conformità CE

PRODUCT MANUFACTURER / PRODUTTORE:

CD Automation S.R.L.
Controllers, Drives & Automation

Via Picasso, 34/36 - 20025 Legnano (MI)- Italy
P.I. 08925720156 -Tel. +39 0331 577479 - Fax +39 0331 579479
E-mail: info@cdautomation.com - Web: www.cdautomation.com

Declare that the product / Dichiara che il prodotto:

Revo C 2Ph 30-40A

PRODUCT DESCRIPTION: Electric power control
SCOPE OF APPLICATION: Thermal control process
DESCRIZIONE DEL PRODOTTO: Unità di controllo potenza elettrica
UTILIZZO: Controllo processi termici

FULFILS THE REQUIREMENTS OF THE STANDARD:

Electrical safety Standard	EN60947-1:	2007 + A1 2011, A2 2014
	EN60947-4-3:	2014
Generic Emission standard	EN60947-4-3:	2014 Group 1 Class A emissions
Generic Immunity standard	EN60947-4-3:	2014 Industrial Immunity
Industrial electromagnetic environment	61326-1	

SODDISFA I REQUISITI DELLA NORMA:

Specifica di sicurezza	EN60947-1:	2007 + A1 2011, A2 2014
	EN60947-4-3:	2014
Specifica sulle emissioni	EN60947-4-3:	2014 gruppo 1 emissioni classe A
Specifica sulle Immunità	EN60947-4-3:	2014 Immunità industriale
Ambiente elettromagnetico industriale	61326-1	

CDAutomation declares that the products above mentioned are conforming to the directive
CDAutomation dichiara che i prodotti sopra menzionati sono conformi alla direttiva
Bassa Tensione (low Voltage)
Low Voltage Directive updated 2014/35/EU
EMC directive updated 2014/30/EU

Issued on: 03/03/2023
Data di emissione: 03/03/2023

Amministratore Unico e
Legale Rappresentante
Simone Brizzi

Declaration of conformity

Declaration of conformity-Dichiarazione di Conformità

UK CA

PRODUCT MANUFACTURER / PRODUTTORE:

CD Automation S.R.L.
Controllers, Drives & Automation

Via Picasso, 34/36 - 20025 Legnano (MI)- Italy
P.I. 08925720156 -Tel. +39 0331 577479 - Fax +39 0331 579479
E-mail: info@cdautomation.com - Web: www.cdautomation.com

Declare that the product / Dichiara che il prodotto:

Revo C 2Ph 30-40A

PRODUCT DESCRIPTION: Electric power control
SCOPE OF APPLICATION: Thermal control process
DESCRIZIONE DEL PRODOTTO: Unità di controllo potenza elettrica
UTILIZZO: Controllo processi termici

FULFILS THE REQUIREMENTS OF THE STANDARD:

Electrical safety Standard	EN60947-1:	2007 + A1 2011, A2 2014
	EN60947-4-3:	2014
Generic Emission standard	EN60947-4-3:	2014 Group 1 Class A emissions
Generic Immunity standard	EN60947-4-3:	2014 Industrial Immunity
Industrial electromagnetic environment	61326-1	

SODDISFA I REQUISITI DELLA NORMA:

Specifica di sicurezza	EN60947-1:	2007 + A1 2011, A2 2014
	EN60947-4-3:	2014
Specifica sulle emissioni	EN60947-4-3:	2014 gruppo 1 emissioni classe A
Specifica sulle Immunità	EN60947-4-3:	2014 Immunità industriale
Ambiente elettromagnetico industriale	61326-1	

CDAutomation declares that the products above mentioned are conforming to the directive
CDAutomation dichiara che i prodotti sopra menzionati sono conformi alla direttiva
Bassa Tensione (low Voltage)
Low Voltage Directive updated 2014/35/EU
EMC directive updated 2014/30/EU

Issued on: 03/03/2023
Data di emissione: 03/03/2023

Amministratore Unico e
Legale Rappresentante
Simone Brizzi

Important warnings for safety

This chapter contains important information for the safety. The not observance of these instructions may result in serious personal injury or death and can cause serious damages to the Thyristor unit and to the components system included.
The installation should be performed by qualified persons.
In the manual are used symbols to give more evidence at the notes of safety and operativity for the attention for the user:

	This icon is present in all the operational procedures where the Improper operation may result in serious personal injury or death by Electrical Shock Hazard Symbol (a lightning bolt in a triangle) precedes an electric shock hazard CAUTION or WARNING safety statement.
	Warning or Hazard that needs further explanation than the label on unit can provide. Consult User's Guide for further information.
CE	Unit is compliant with European Union directives. See Declaration of Conformity for further details on Directives and Standards used for Compliance.
UL	If available, unit is a Listed device per Underwriters Laboratories. It has been investigated to ANSI/UL® 508 standards for Industrial Control Switches and equivalent to CSA C22.2 #14. For more detail search for File E231578 on www.ul.com
	ESD Sensitive product, use proper grounding and handling techniques when installing or servicing product.
	Do not throw in trash, use proper recycling techniques or consult manufacturer for proper disposal.

A **"NOTE"** marks a short message to alert you to an important detail.

A **"CAUTION"** safety alert appears with information that is important for protecting your equipment and performance. Be especially careful to read and follow all cautions that apply to your application.

A **"WARNING"** safety alert appears with information that is important for protecting you, others and equipment from damage. Pay very close attention to all warnings that apply to your application.

Safety notes



WARNING! To avoid damage to property and equipment, injury and loss of life, adhere to applicable electrical codes and standard wiring practices when installing and operating this product. Failure to do so could result in damage, injury and death.



AVERTISSEMENT! Pour éviter d'endommager la propriété et l'équipement, les blessures et la perte de vie, respecter les codes électriques en vigueur et les pratiques de câblage standard au moment de l'installation et de l'utilisation de ce produit. Dans le cas contraire, cela peut entraîner la mort, des blessures graves ou des dommages.

WARNING! All service including inspection, installation, wiring, maintenance, troubleshooting, fuse or other user serviceable component replacement must be performed only by properly qualified personnel. Service personnel must read this manual before proceeding with work. While service is being performed unqualified personnel should not work on the unit or be allowed in the immediate vicinity.

AVERTISSEMENT! Tous les services, y compris l'inspection, l'installation, le câblage, l'entretien, le dépannage, le remplacement de fusibles ou d'autres composants pouvant être réparés par l'utilisateur, doivent être effectués uniquement par un personnel diment qualifié. Le personnel de service doit lire ce manuel avant d'effectuer tout travail. Pendant que l'entretien est exécuté, tout personnel non qualifié ne doit effectuer de travail sur l'appareil ni se trouver a proximité.

WARNING! When in use the power controller is connected to dangerous voltages. Do not remove the protective covers without first disconnecting and preventing power from being restored while servicing the unit.

AVERTISSEMENT! Au moment de l'utilisation, le régulateur de puissance est connecté a des tensions dangereuses. Ne retirer aucun couvercle de protection sans d'abord débrancher l'appareil et ainsi empêcher l'alimentation d'être rétablie pendant l'entretien.

WARNING! Do not use in aerospace or nuclear applications.

AVERTISSEMENT! Ne pas utiliser pour les applications aérospatiales ou nucléaires.

WARNING! The units are not developed to manage capacitive loads.

AVERTISSEMENT! Les unités ne sont pas développées pour la conduite de charges capacitives.

WARNING! The power controller's protection rating is IP20 with all covers installed and closed. It must be installed in an enclosure that provides all the necessary additional protections appropriate for the environment and application.

AVERTISSEMENT! L'indice de protection du régulateur de puissance est de IP20 lorsque les couvercles sont installés et fermés. L'appareil doit être installé dans une enceinte qui assure toute la protection supplémentaire nécessaire pour l'environnement et l'application.

WARNING! Ground the power controller via the provided protective earth grounding terminal. Verify ground is within impedance specifications. This should be verified periodically.

AVERTISSEMENT! Mise a la terre du régulateur de puissance par le biais de la borne de prise de terre de protection fournie. Vérifier que la prise de terre est conforme aux spécifications de l'impédance. Cela doit être vérifié périodiquement.

WARNING! Electric Shock Hazard: when the power controller has been energized, after shutting off the power, wait at least one minute for internal capacitors to discharge before commencing work that brings you in to contact with power connections or internal components.

AVERTISSEMENT! Risque de décharges électriques: lorsque le régulateur de puissance est mis sous tension, après avoir été éteint, attendre au moins une minute pour que les condensateurs internes se déchargent avant de commencer tout travail incluant le contact avec les connexions électriques ou les composants internes.

WARNING! The installation must be protected by electromagnetic circuit breakers or by fuses. The semiconductor fuses located inside the power controller are classified for UL as supplementary protection for semiconductor devices. They are not approved for branch circuit protection.

AVERTISSEMENT! L'installation doit être protégée par des disjoncteurs électromagnétiques ou des fusibles. Les fusibles pour semi-conducteurs situés a l'intérieur du régulateur de puissance sont classés UL comme protection supplémentaire pour les dispositifs pour semi-conducteurs. Ils ne sont pas approuvés pour la protection des circuits de dérivation.

WARNING! When making live voltage or current measurements, use proper personal protective equipment for the voltages and arc-flash potentials involved.

AVERTISSEMENT! Au moment de relever des mesures de tension ou de courant en direct, utiliser un équipement de protection individuelle approprié pour les tensions et les potentiels d'arc électrique concernés.

WARNING! Verify the voltage and current ratings of the power controller are correct for the application.

AVERTISSEMENT! Vérifier que les valeurs de tension et de courant du régulateur de puissance sont correctes pour l'application.

CAUTION: To avoid compromising the insulation, do not bend wire or other components beyond their bend radius specifications.

ATTENTION: Pour éviter de compromettre l'isolation, ne pas plier le fil ou tout autre composant au-delà de ses spécifications en matière de rayon de courbure.

CAUTION: Protect the power controller from high temperature, humidity and vibrations.

ATTENTION: Protéger le régulateur de puissance contre les températures élevées, l'humidité et les vibrations.

CAUTION: The power controller warranty is void if the tested and approved fuses are not used.

ATTENTION: La garantie du régulateur de puissance est nulle si aucun fusible testé et approuvé n'est utilisé.

CAUTION: Only trained and authorized personnel should access and handle the internal electronics and they must follow proper electro-static prevention procedures.

ATTENTION: Seul le personnel formé et autorisé peut accéder aux composants électroniques internes et les gérer, et il doit se conformer a des procédures de prévention électrostatique appropriées.

CAUTION: Install an appropriately sized RC filter across contactor coils, relays and other inductive loads.

ATTENTION: Installer un filtre RC de dimensions appropriées sur les bobines du contacteur, les relais et autres charges par induction.

CAUTION: The thyristor units here described have been designed for use with sinusoidal networks with nominal frequency 50-60 Hz. Any application with NON-SINUSOIDAL, distorted or disturbed networks could compromise the correct operation of the unit.

ATTENTION: Les unités de thyristors décrites ici ont été conçues pour être utilisées avec des réseaux sinusoïdaux d'une fréquence nominale de 50 à 60 Hz. Toute application utilisant des réseaux NON SINUSOÏDAUX, déformés ou perturbés peut compromettre le bon fonctionnement de l'appareil.

NOTE: Provide a local disconnect to isolate the power controller for servicing.

REMARQUE: Fournir une déconnexion locale afin d'isoler le régulateur de puissance pour l'entretien.

NOTE: The nominal current is specified for ambient temperatures at or below 40° C. Ensure the application design allows for adequate cooling of each power controller. The power controller must be mounted vertically. The cooling design must prevent air heated by one power controller from causing power controllers mounted above to exceed the ambient operating temperature limit. When power controllers are mounted side by side allow a minimum spacing of 15mm between them.

REMARQUE: Le courant nominal est précisé pour des températures ambiantes égales ou inférieures a 40°C. S'assurer que la conception de l'application permette le refroidissement adéquat de chaque régulateur de puissance. Le régulateur de puissance doit être monté verticalement. La conception de refroidissement doit empêcher l'air chauffé par le régulateur de puissance de dépasser la limite de température de fonctionnement ambiante de la part des régulateurs de puissance montés au-dessus. Lorsque les régulateurs de puissance sont montés côte a côte, il faut conserver un espacement minimal de 15 mm entre les deux.

NOTE: Use only copper cables and wires rated for use at 90°C or greater.

REMARQUE: N'utiliser que des cables et des fils en cuivre pour l'utilisation a 90°C ou plus.

Maintenance

In order to have a corrected cooling, the user must clean the heat-sink and the protective grill of the fans. The frequency of this servicing depends on environmental pollution.
Also check periodically if the screw for the power cables and safety earth are tightened correctly (See Connection Diagram).

Warranty condition

Producer gives a 12 months warranty to its products.

The warranty is limited to repairing and parts substitution in our factory and does exclude products not properly used and fuses.

Warranty does not include products with serial numbers deleted. The faulty product should be shipped to Producer at customer's cost and our Service will evaluate if product is under warranty terms.

Substituted parts remain of Producer property.

CE

CD Automation srl assumes no liability for any damage to persons or property deriving from tampering, from incorrect or improper use, or from any use not conforming to the characteristics of the controller and to the instructions in this User Manual.

Return Material Authorization (RMA)

Customers wishing to return any items, whether they are incorrectly supplied, faulty or damaged in transit, must first complete a Return Material Authorisation (RMA) form to obtain an RMA number from the Service Department.
A full repair service is available for customers. Prior to submitting the RMA form and returning products, customers are recommended to contact the technical support team to determine whether the issue can be resolved with telephone support.

How the RMA service works

The RMA form and details are available on our web sites:

https://www.cdautomation.com/rma-english-version/

When completing the RMA form, please be as specific as possible about the problem, including any pertinent application details. The more information given, the more quickly and more thoroughly the problem can be solved. The minimum information required is:

1. The Full Model Number
2. Quantity of units being returned
3. The units Serial Number(s)
4. A description of the problem ("faulty" or "unknown" is not sufficient)

Summary

Declaration of conformity. 2
Important warnings for safety 4
Maintenance 7
Introduction 10
1 Advantages compared with analog thyristor unit 11
1.1 Overview 11
2 Software Configurator 12
3 Quick Start 13
4 Basic Connections and sizing 14
5 Identification and Order Code 15
5.1 Identification of the unit. 15
5.2 Order Code 16
6 Technical Specifications 17
6.1 General features 17
6.2 Input features. 17
6.3 Output features (power device) 17
6.4 Environmental installation conditions 18
6.5 Derating Curve 18
6.6 Calculating flow capacity of the fan. 18
6.7 Wi-Fi Transmitter Module 19
7 Installation 20
7.1 Dimensions and weight 21
7.2 Fixing holes 21
8 Wiring instructions 22
8.1 Access to L1-L3 and T1-T3 terminal Screw 23
8.2 Command Terminals 25
8.3 Schematic 26
8.4 Connection Diagram for 3 phases (control on 2 phases) 29
9 Control Panel. 30
9.1 Menu navigation 31
9.2 Control Panel Led 32
9.3 Displayed alarms 32
9.4 Parameter list. 33
10 Using the Configurator 46
10.1 Typical Uses 46
10.2 Communicating with Power Controllers 46
10.3 Recipes 46
10.4 How to. 46

10.5 Using the Configurator . . . 48
10.6 Software General information . . . 51
10.7 Configurator access levels . . . 58
11 Configurable Inputs and Outputs . . . 59
11.1 Digital Inputs . . . 59
11.2 Analog Input 1: Set Point . . . 59
11.3 Analog Input 2: Set Point or Feedback . . . 60
11.4 Alarms and Alarm Relay Output . . . 60
12 Alarm description . . . 61
12.1 Heater Break Alarm . . . 61
12.2. AUX High . . . 62
12.3 AUX Low . . . 62
12.4 ComError . . . 62
12.5 AUX Line Loss . . . 62
12.6 SD Error . . . 62
12.7 SHRT . . . 62
12.8 SCR Temp . . . 62
12.9 Line Loss . . . 62
13 "Enable" Function in static Unit . . . 63
13.1 Using Digital Input only . . . 63
13.2 Using Serial Port RS485 only . . . 64
13.3 Using Digital Input + Serial Port RS485 . . . 64
13.4 Using FieldBus only . . . 65
13.5 Using Digital Input + FieldBus . . . 66
14 Firing type . . . 67
14.1 Zero Crossing . . . 67
14.2 Burst Firing . . . 67
15 Control Mode (feed-back) . . . 68
16 Electronic boards . . . 69
16.1 How to access . . . 69
16.2 Supply the Electronic Board . . . 70
17 24Vdc input Auxiliary supplemental power . . . 72
18 RS485 Serial port . . . 73
19 Fieldbus communication option . . . 73
20 Internal Fuse . . . 74
20.1 Fuses Replacement . . . 74

Introduction

A thyristor unit is semiconductor device which acts as a switch formed by two thyristors in antiparallel.
To switch on the alternating current the input signal will be on and the thyristor will switch off at first Zero Crossing voltage with no input signal.
The benefits of thyristor units compared with electromechanical contactors are numerouses: no moving parts, no maintenance and capacity to switch very fast. Thyristors are the only solution to control transformers and special loads that change resistance with temperature and with age.

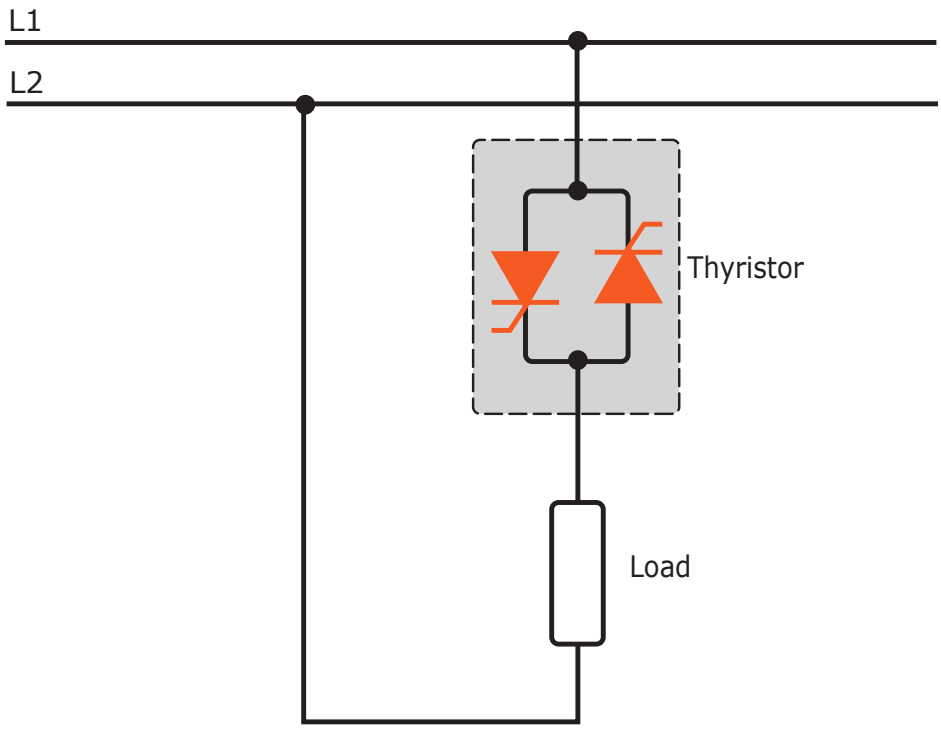

1 Advantages compared with analog thyristor unit

Communication RS485 is a standard feature of REVO C this allows the use of many information like: current, power, load state and all the parameters for diagnostic and configuration. Ulterior advantages of the digital system vs the analogical is the flexibility and the possibility of implement special characteristics without change the hardware. Several strategies can be implemented and selected through the configuration parameters. With software configuration, you can have access to the configuration parameters.
To connect the Thyristor unit to the computer use a micro USB cable.



1.1 Overview

Integrated semiconductor fusing, current transformer and user interface
- Saves installation time and eases setup and commissioning
- Delivers a user-friendly, intuitive interface

Industry-leading design and serviceability
- Offers a robust SCR design to meet a rugged industrial environment's high quality and reliability needs
- Provides quick and easy access to maintain and service fuses and individual legs in minimal time
- Enables fast troubleshooting by providing helpful thermal system diagnostics

Comprehensive power controller range
- Provides wide range of options from simple single phase to complex three-phase loads to 690V

100kA short circuit current rating (SCCR) (Not reviewed by UL®)
- Enables greater protection in the event of a short circuit

c-UL® 508 Listed
- Shortens project schedules, agency testing and expenses

Control modes: contactor, voltage, current or power
- Satisfies a wide range of demanding thermal applications

Load firing modes: zero-cross, burst fire
- Handles a wide range of load types including nichrome, medium and long waveform infrared lamps, moly, transformers, silicon carbide, UV lamps and tungsten
- Protects and extends the life of connected loads

Wide range of communication protocols
- Enable factory and process automation with connectivity to process and equipment data via Modbus® RTU, Modbus® TCP, Wi-Fi, Profibus, Profinet, USB device (configuration and data file transfers)

Open heater and shorted SCR indication
- Minimizes production downtime with easy to understand, intelligent, troubleshooting diagnostics

Integrated USB and user interface for configuration
- Easily and safely program configuration settings as the user interface can be powered through USB connection
- Eliminates need to work in a high voltage hazard environment. High voltage to the power controller and system panel can be shut off and locked out for safety while configuring controller.

2 Software Configurator

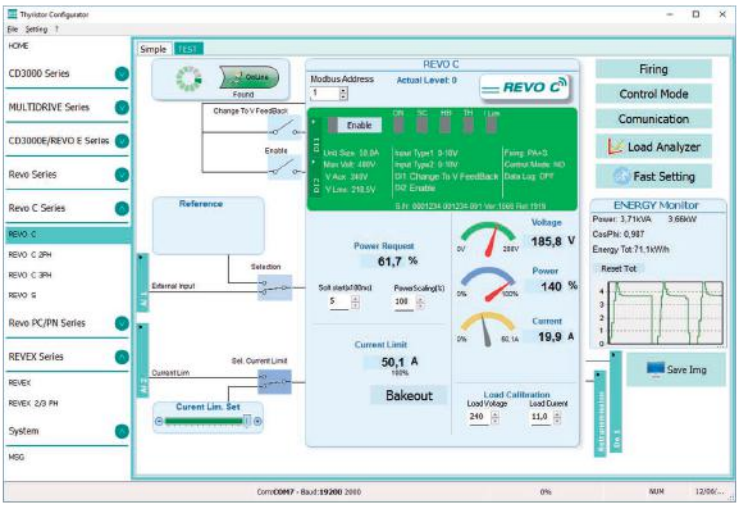

Thyristor configurator software is free and is possible download it from our site.
If the Order Code is in line with requirement, then unit has been already configured in Factory and it's ready to use.
You need the software only to modify the ordered configuration. Anyway we suggest to check the unit on the machine with the "Test unit" section.
For install the software, launch the program and follow the instructions on the screen.
Run the software configurator and set the correct serial port number by menu setting-serial com – port number.

Software Configurator download link:
https://www.cdautomation.com/wp-content/uploads/ThyristorConfigurator_ver6.zip

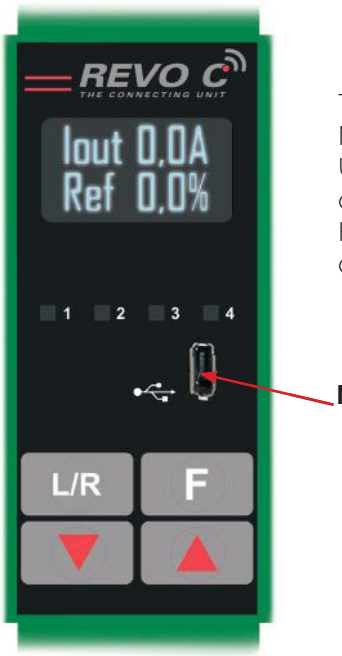

To connect the unit at the PC, it's necessary to use the micro USB 2.0 Modbus RTU cable.
USB connection need a driver to work properly, you can find it from our site.
However the configuration software installer will install as default the correct driver.

3 Quick Start



Attention: this procedure must be carried out by skilled people only.

If your REVO C code is in line with what you really need, then the main configuration is already done by Producer and you just need to do the following steps:

1. Verify REVO C current sizing. Be sure that:
   • the load current is equal or less than the nominal one of REVO C
   • the main voltage is equal or less than the nominal voltage of REVO C
2. Verify the Installation
3. Verify the Wiring:
   • all auxiliary connections must be done in line with wirings on this manual
   • verify that there isn't a short circuit on the load
4. Supply the Unit
5. Go in the **Operator menu**
   Set the parameters **Operative Load Voltage** and **Nominal Current of the load** using the frontal keypad or Thyristor configurator software.

   The Unit is ready to work

The auxiliary voltage supply of the REVO C unit must be synchronized with load voltage power supply.
If the Auxiliary Voltage (written on the identification label) is different from Supply Voltage (to the load), use an external transformer.

IMPORTANT

Suggested Starting Strategy (Enable) (See Chapter 13):

1: Feed the unit with L1-L2-L3 power voltage supply

2: Feed the auxiliary supply

3: Close the Enable contact to start with the regulation

If your REVO C code is NOT in line with what you really need, use the enclosed configurator software tool to set-up the unit. Install the software on your PC, select REVO C and click on test unit changing what you need.

4 Basic Connections and sizing

Star wiring with resistive load (control on two phases with REVO C-2PH)

$$I = \frac{P}{1{,}73V}$$

V = Nominal voltage of the load
I = Nominal current of the load
P = Nominal power of the load

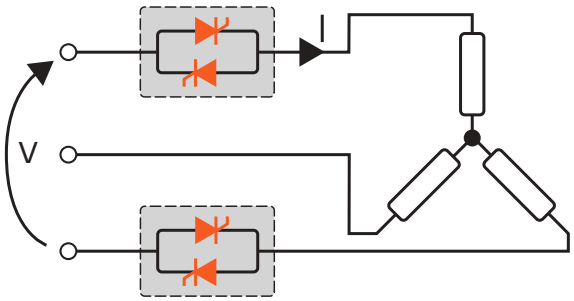

Delta wiring with resistive load (control on two phases with REVO C-2PH)

$$I = \frac{P}{1{,}73V}$$

V = Nominal voltage of the load
I = Nominal current of the load
P = Nominal power of the load

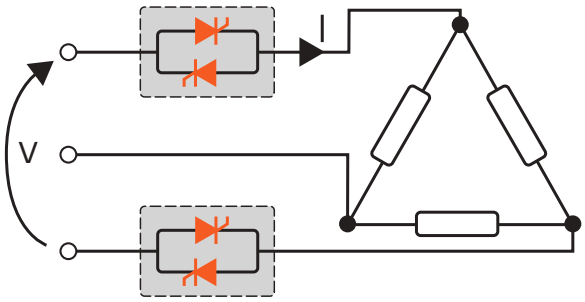

5 Identification and Order Code

5.1 Identification of the unit

Caution: Before to install, make sure that the Thyristor unit have not damages. If the product has a fault, please contact the dealer from which you purchased the product.

The identification label give all the information regarding the factory settings of the Thyristor unit, this label is on the unit, like represented in figure.
Verify that the product is the same thing as ordered.

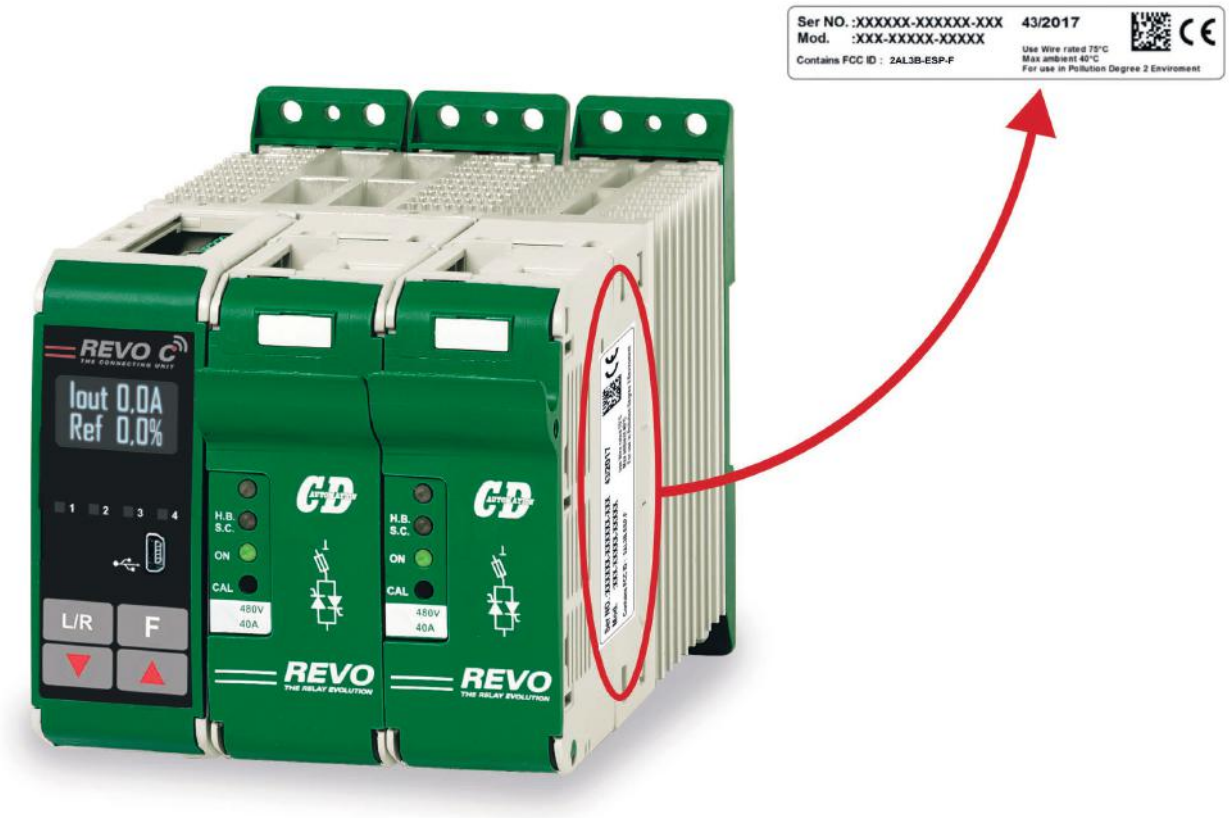

5.2 Order Code

	1	2	3	4	5	6		7	8	9	10	11	12	13	14	15	16
REVO C 2PH	R	C	2	_	_	_	-	_	_	_	_	_	_	_	_	_	_

CURRENT	FUSES	4	5	6
description	description	code		
30A	Fuse + Fuse Holder Included	0	3	0
35A	Fuse + Fuse Holder Included	0	3	5
40A	Fuse + Fuse Holder Included	0	4	0

MAX VOLTAGE	7
description	code
480V	4
600V	6

MAIN SUPPLY VOLTAGE	AUX VOLTAGE RANGE	8
description	description	code
100/120Vac	90 to 135V Vac	1
200/208/230/240Vac	180 to 265V Vac	2
277Vac	238 to 330V Vac	3
380/415/480Vac	342 to 528V Vac	5
600Vac	540 to 759V Vac	6

INPUT	9
description	code
SSR	S
0:20mA	B
4:20mA	A
0:10V	V
10KPot	K

FIRING	START OPTION	10
description	description	code
Burst Firing	No Soft Start	B
Zero Crossing	No Soft Start	Z

CONTROL MODE	11
description	code
Open Loop	0
Voltage	U
Voltage Square	Q
Current	I
Current Square	A
Power VxI	W

OPTION	12
description	code
No Option	0
Option code, see code page table	...

FAN VOLTAGE	13
description	code
No Fan < 90A	0

APPROVALS	14
description	code
CE EMC For European Market	0
CUL us + CE EMC For American & European Market	L

LOAD TYPE	15
description	code
Normal Resistive Load with 3 Phase Star without neutral Connection	0
Normal Resistive Load with 3 Phase Delta Connection	1
IRSW Infrared Short wave with 3 Phase Star Connection	2
IRSW Infrared Short wave with 3 Phase Delta Connection	3

COMMUNICATION AND RETRANSMISSION		16
description	description	code
N°1 Modbus RTU	No Retransmission	0
	Retransmission 4:20mA	1
	Retransmission 0:10V	2
N°2 Modbus RTU	No Retransmission	3
	Retransmission 4:20mA	4
	Retransmission 0:10V	5
N°1 Profibus DP	No Retransmission	6
	Retransmission 4:20mA	7
	Retransmission 0:10V	8
N°1 Profinet IO	No Retransmission	9
	Retransmission 4:20mA	A
	Retransmission 0:10V	B
N°1 Modbus TCP	No Retransmission	C
	Retransmission 4:20mA	D
	Retransmission 0:10V	E

5.2.1 Option Code

HB	WIFI	LOGGING	TOTALIZER	CODE
				0
			■	1
		■		2
		■	■	3
	■			4
	■		■	5
	■	■		6
	■	■	■	7
■				8
■			■	9
■		■		A
■		■	■	B
■	■			C
■	■		■	D
■	■	■		E
■	■	■	■	F

HB Alarm for partial or total load failure and Short Circuit on SCR (relay output).

WiFi Option that allows communication with a smart phone. From your smart phone via the CD Automation App, direct to your thyristor unit in the cabinet to read current, voltage, power and energy totalization as well as the ability to change parameters to improve process and product quality without opening the cabinet door.

APP Free of charge download it from Google Play or Apple Store.

DATA LOGGER This feature is important to see the historical data of parameter like Current, Voltage and Power and can be useful to diagnose a fault.

ENERGY TOTALIZER This function totalize the energy consumption of the load allowing the calculation cost of heat treatment.

6 Technical Specifications

6.1 General features

Operative voltage:	480V +10% max -10% min; 600V +10% max -10% min
Cover and Socket material:	PolymericV2
Mounting:	DIN bar (thickness type 1mm Max)
Utilization Category:	AC-51 AC-55b
IP Code:	20
Method of Connecting:	Load in Delta, Load in Star

Auxiliary voltage:
Order Code RC2_ _ _-_1 = line voltage 100/120V transformer range 90:135V (8 VA Max)
Order Code RC2_ _ _-_2 = line voltage 200/208/220/230/240V transformer range 180:265V (8 VA Max)
Order Code RC2_ _ _-_3 = line voltage 277 transformer range 238:330V (8 VA Max)
Order Code RC2_ _ _-_5 = line voltage 380/400/415/440/480V transformer range 342:528V (8 VA Max)
Order Code RC2_ _ _-_6 = line voltage 600V transformer range 540:759V (8 VA Max)

Relay output for Heater Break Alarm (only with HB option):	0.5A a 125VAC

6.2 Input features

Digital Input:	4 ÷ 30Vdc 5mA Max (ON ≥4Vdc OFF <1Vdc) 0,5Hz max
Volt Analogic input:	0 ÷ 10Vdc impedance 15 kΩ
Current Analogic input:	0 ÷ 20mA impedance 100 Ω 4 ÷ 20mA impedance 100 Ω
POT:	10 kΩ min.
Logic input SSR (Fast Enable):	4 ÷ 30Vdc 5mA Max (ON ≥4Vdc OFF <1Vdc) duty cycle min. 100 ms max 3Hz

6.3 Output features (power device)

Nominal current in continuous service:	See order code
Max peak current (10ms):	360A for unit type 030 540A for unit type 035 700A for unit type 040
Nominal Voltage range **Ue**:	24÷600V
Repetitive peak reverse voltage **Uimp**:	1200V (480V) 1600V (600V)
Latching current:	250mA
Leakage current:	15mA eff
FUSE I^2t value suggested at 500Vac tp=10msec:	525 A^2s for unit type 030 1260 A^2s for unit type 035 1260 A^2s for unit type 040
Frequency range:	47÷70Hz
Power loss (I=Inom):	76W for unit type 030 88W for unit type 035 100W for unit type 040
Isolation Voltage **Ui**:	2500Vac

6.4 Environmental installation conditions

Ambient temperature	0-40°C (32-104°F) at nominal current. Over 40°C-104°F use the derating curve (max 50°C).
Storage temperature	-25°C to 70°C -13°F to 158°F
Installation place	Don't install at direct sun light, where there are conductive dust, corrosive gas, vibration or water and also in salty environmental.
Altitude	Up to 1000 meter over sea level. For higher altitude reduce the nominal current of 2% for each 100m over 1000m
Humidity	From 5 to 95% without condense and ice
Pollution Level	Up to 2nd Level ref. IEC 60947-1 6.1.3.2

6.5 Derating Curve

The nominal current of the units in specification are referred to continuous service at 40° ambient temperature. For higher temperature multiply the nominal current times derating coefficient K below represented:

I max = I nominal x K

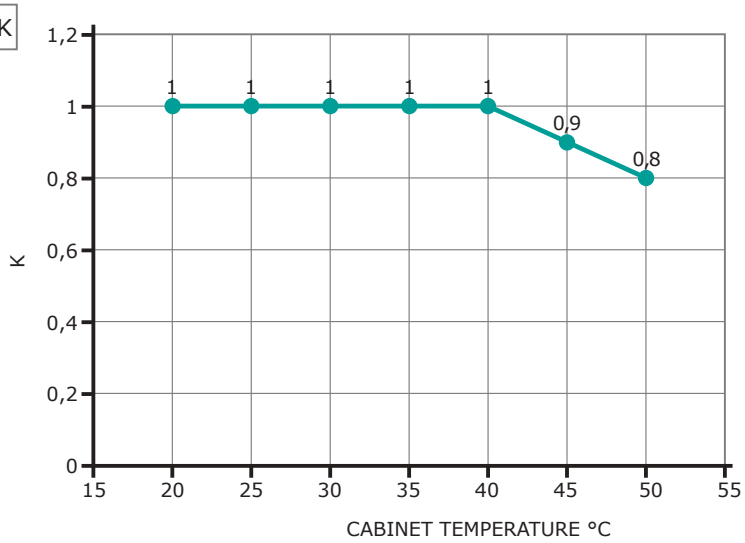

For higher cabinet temperature (more than 50°C) contact the producer of the unit

6.6 Calculating flow capacity of the fan

All the thyristor units when are in conduction produces power loss that is dissipated inside cubicle in terms of heating. Due to this fact the internal temperature of cubicle is higher than ambient temperature. To be cooled the thyristor need of fresh air cooling and to do it is normally used a fan mounted on the front door or on the roof of the cabinet.

Procedure to size **Fan air mass flow (V)**: *see power loss for each thyristor and fuse mounted indicated in the manual related to the current (Output feature and Internal fuse Chapter).*

$$V = f * \frac{Qv}{tc - ta}$$

Qv = total power losses (w)
(thyristor + fuse power loss)
ta = ambient temperature (°C)
tc = cabinet temperature (°C)
V = fan air mass flow (m3/h)
f = altitude coefficient (see table on right)

Altitude	
0:100	meters f = 3.1 m3k/Wh
100:250	meters f = 3.2 m3k/Wh
250:500	meters f = 3.3 m3k/Wh
500:750	meters f = 3.4 m3k/Wh

The formulas used are for information only and is not a substitute for a proper thermal rating done by a qualified person.

6.7 Wi-Fi Transmitter Module

Models RC_ _ _-_ _ _ _ _-_ _ _ with WiFi option contains a Wi-Fi transmitter module, see model label plate for details on which module is installed.
The transmitter module is mounted on the top of the microprocessor board.

The module used can be:

Module FCC ID: 2ADUIESP-12-F 802.11b/g/n 2412-2462 MHz Output Power: • 802.11b: 15.58 dBm (Max.) • 802.11g: 13.72 dBm (Max.) • 802.11n: 12.53 dBm (Max.) Antenna gain: 1.0 dBi PCB antenna 11 channels.	OR	Module FCC ID: 2AL3B-ESP-F 802.11b/g/n 2412-2462 MHz Output Power: • 802.11b: 14.0 dBm (Max.) • 802.11g: 12.8 dBm (Max.) • 802.11n: 13.6 dBm (Max.) Antenna gain: 1.0 dBi PCB antenna 11 channels.

Unit is assembled from tested components, complete system is tested.

This device complies with Part 15 of the FCC Rules. Operation is subject to the following two conditions:

(1) this device may not cause harmful interference, and
(2) this device must accept any interference received, including interference that may cause undesired operation.

Caution: *no changes or modifications allowed on the equipment not expressly approved by the party responsible for compliance. It could void the user's authority to operate the equipment.*
The FCC number is located on the right side of the unit, see sample below:

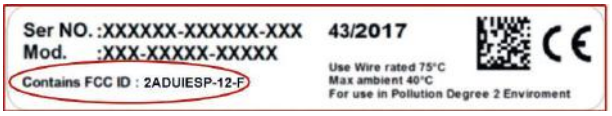

OR

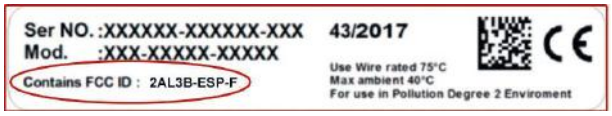

Note: This equipment has been tested and found to comply with the limits for a Class A digital device, pursuant to part 15 of the FCC Rules. These limits are designed to provide reasonable protection against harmful interference when the equipment is operated in a commercial environment. This equipment generates, uses, and can radiate radio frequency energy and, if not installed and used in accordance with the instruction manual, may cause harmful interference to radio communications. Operation of this equipment in a residential area is likely to cause harmful interference in which case the user will be required to correct the interference at his own expense.

7 Installation

Before to install, make sure that the Thyristor unit have not damages.
If the product has a fault, please contact the dealer from which you purchased the product. Verify that the product is the same thing as ordered.
The Thyristor unit must be always mounted in vertical position to improve air cooling on heat-sink.
Maintain the minimum distances (*) in vertical and in horizontal as represented, *this area must be free from obstacle* (wire, copper bar, plastic channel).
When more unit has mounted inside the cabinet maintain the air circulation like represented in figure without obstacle for the air flow.Is necessary to install a fan to have better air circulation as calculated previously.

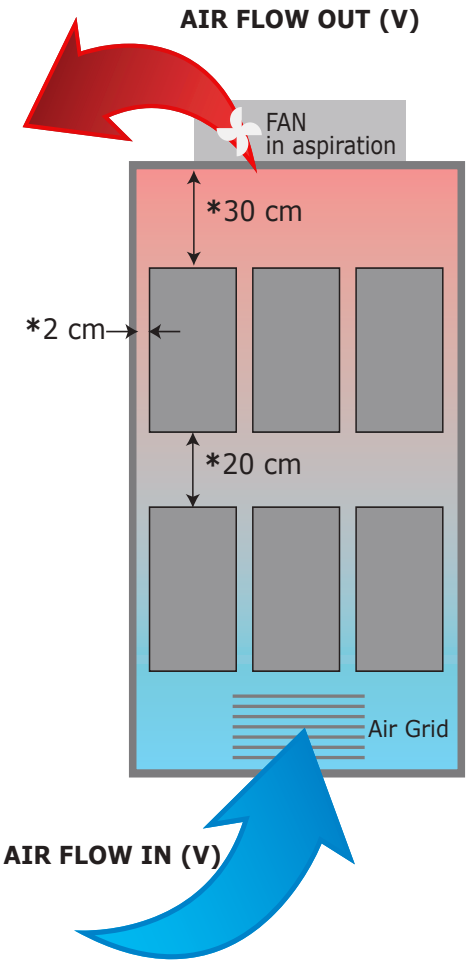

The V Air flow must be equal or more than the value calculated.

If the cabinet fan mounted by the customer have an air flow lower than the correct value the warranty will decay.

7.1 Dimensions and weight

REVO C 2PH
Size: SR10

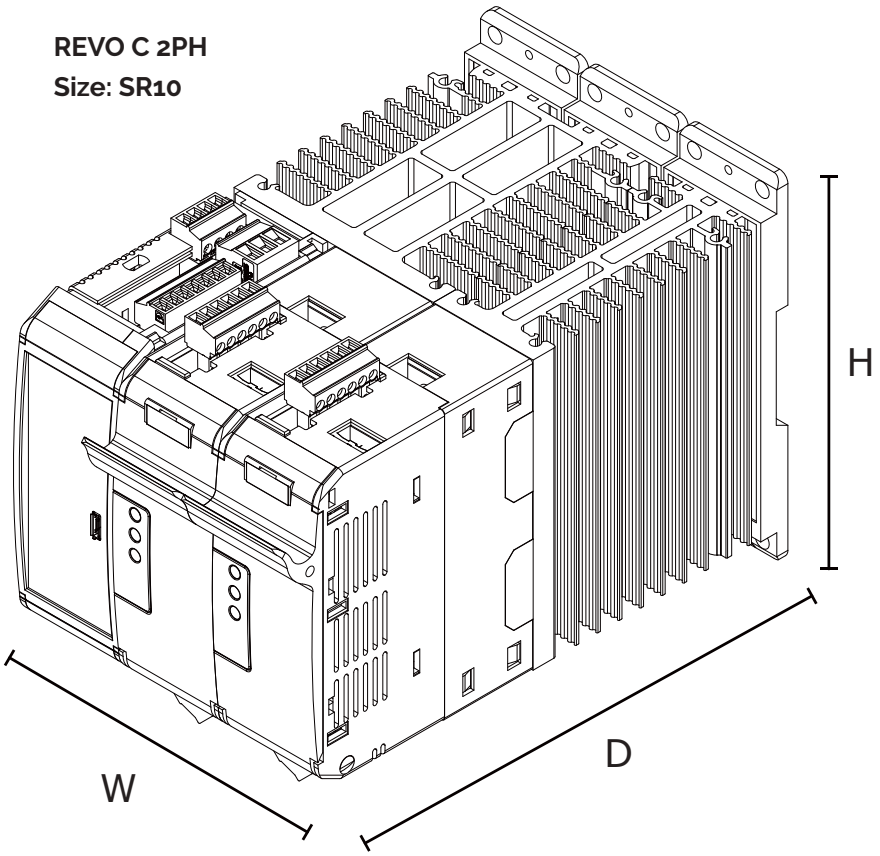

Size:	SR10 (2PH)
W (mm):	108
H (mm):	121
D (mm):	185
Weight (Kg):	1,76

7.2 Fixing holes

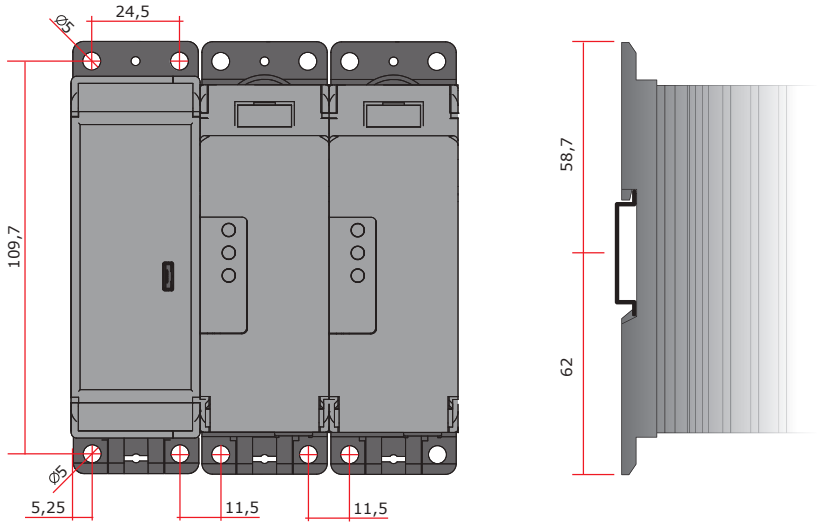

8 Wiring instructions

The Thyristor unit could be susceptible to interferences lost by near equipments or by the power supply, for this reason in accord to the fundamental practices rules is opportune take some precautions:

- The coil contactor, the relays and other inductive loads must be equipped with opportune RC filter.
- Use shielded bipolar cables for all the input and output signals.
- The signal cables must not be near and parallel to the power cables.
- Local regulations regarding electrical installation should be rigidly observed.

Use 90°C copper (CU) conductor only, wire ranges (AWG), wire terminal type (ZMVV), terminal tightening torque in the table below.

Power cable torque (suggested)

Type	Connector Type	Torque Lb-in (N-m)	Wire Range mm^2 (AWG)	MAX Current Terminals	Wire Terminals UL Listed (ZMVV)
030 035 040	Screw M5	26.6 (3.0)	1.5-10 (16-8)	40A	Rigid / Flexible Spade Terminal

Cable dimensions of the Command Terminals **Temperature rating:** 90°C or greater	0.5 mm^2 (AWG 18)
Cable dimensions of the Earth (suggested) **Temperature rating:** 75°C or greater	6 mm^2 (AWG 10)



Warning: Before connecting or disconnecting the unit check that power and control cables are isolated from voltage sources.

Terminal	Description
L1	Line Input Phase 1
T1	Load Output Phase 1
L3	Line Input Phase 2
T3	Load Output Phase 2

8.1 Access to L1-L3 and T1-T3 terminal Screw

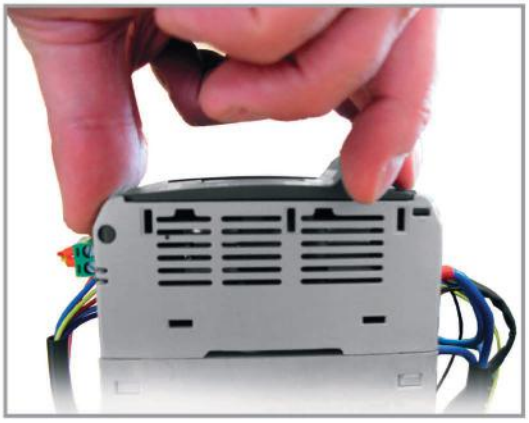



1. Open fuse holder by pulling the frontal cover

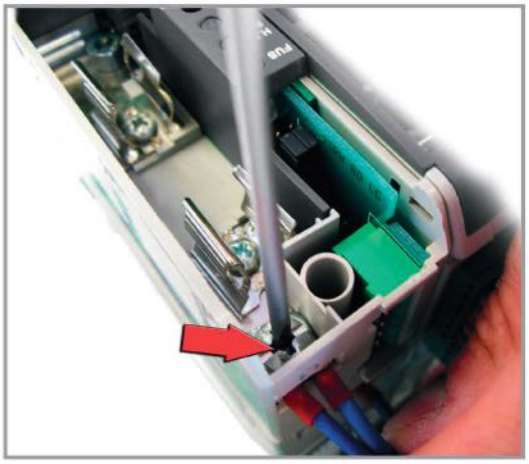

2. Fix the wire on Ln

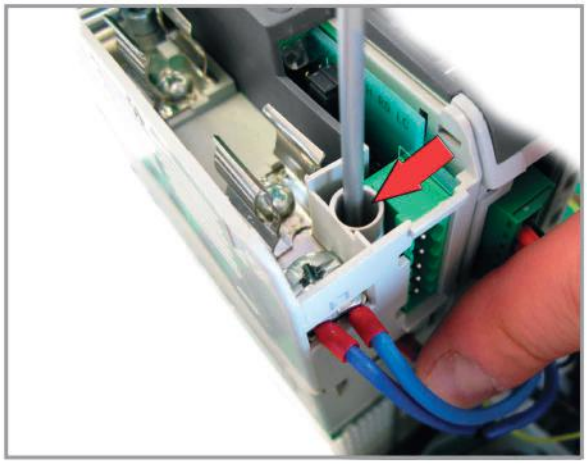

3. Fix the wire on Tn

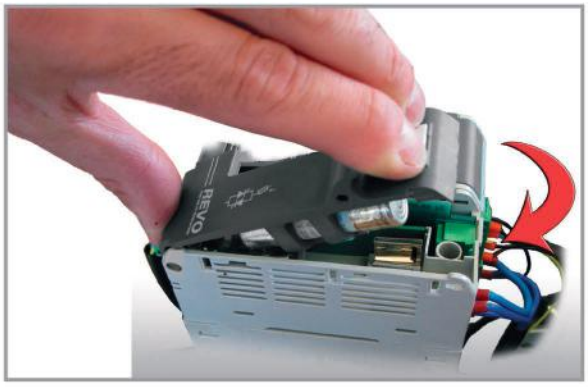

4. Close the cover by pressing

Repeat for each Phase

Locations of the line power, load, earth ground and control signal connections.

Cover closed

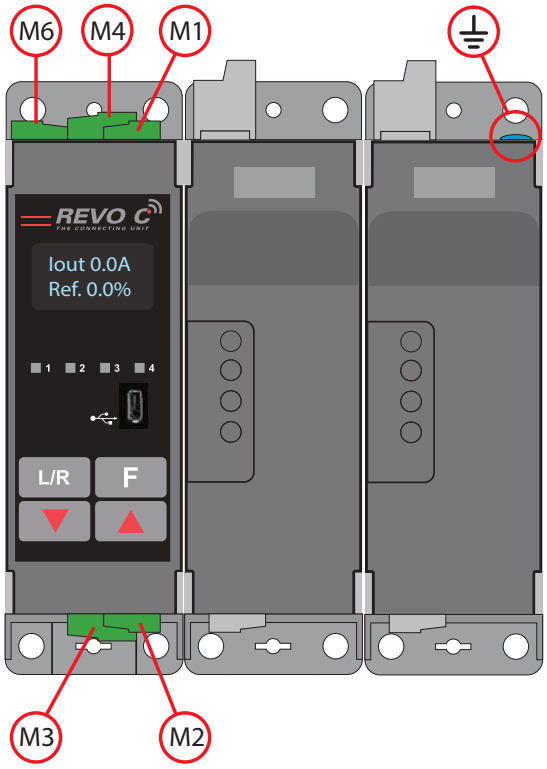

Cover tipped forward

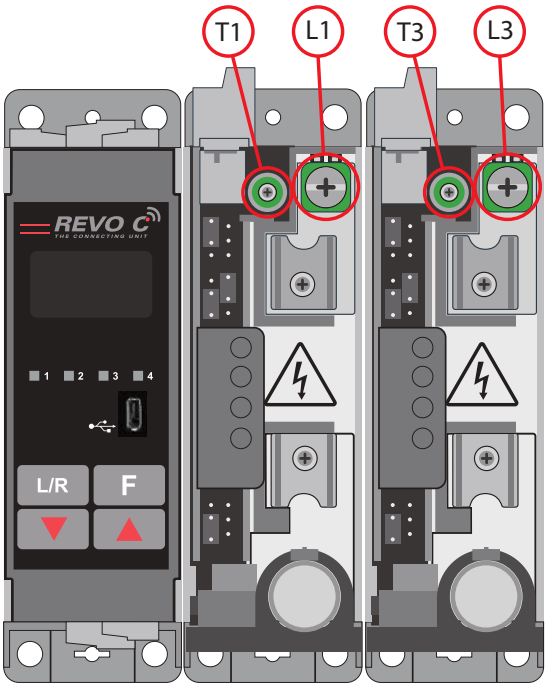

8.2 Command Terminals



Warning: Before connecting or disconnecting the unit check that power and control cables are isolated from voltage sources.

8.2.1 Terminal block M2

Terminal	Description
1	GND
2	COM I - Common Digital Input
3	DI 2 – Enable Digital Input
4	DI 1 - Configurable Input
5	+ Analog Input1 (0-10Vdc/4-20mA Analog Setpoint)
6	- Analog Input1 (0-10Vdc/4-20mA Analog Setpoint)
7	Output +10Vdc stabilized 1 mA MAX
8	Slave Output - (factory connection)
9	Slave Output + (factory connection)

8.2.2 Terminal block M1

Terminal	Description
10	GND
11	TA1 Input (factory connection)
12	TA1 or TA2 input (factory connection)
13	TA3 input (factory connection)
14	C - Common contact alarm relay output
15	NO - Normally Open contact alarm relay output (Thermal or SC/HB/CL)
16	NC - Normally Close contact alarm relay output (Thermal or SC/HB/CL)

8.2.3 Terminal block M3

Terminal	Description
A+	RS485 A+
B-	RS485 B-

8.2.4 Terminal block M4

Terminal	Description
L1	Aux – Voltage Supply for electronic boards and synchronization (See order code for the Value)
-	Not Connected
L2/N	Aux – Voltage Supply for electronic boards and synchronization (See order code for the Value)

8.2.5 Terminal block M6

Terminal	Description
17	Auxiliary +24Vdc 500mA Input backup power supply for communication
18	- Analog Input2 (0-10Vdc/4-20mA Analog Setpoint) – 0 Volt
19	+ Analog Input2 (0-10Vdc/4-20mA Analog Setpoint)
20	Retransmission Output 0-10Vdc 4-20mA

8.2.1 Terminal block M5 (only with Second serial485 optional)

Terminal	Description
A+	RS485 A+
B-	RS485 B-

8.3 Schematic

Caution: this procedure must be performed only by qualified persons

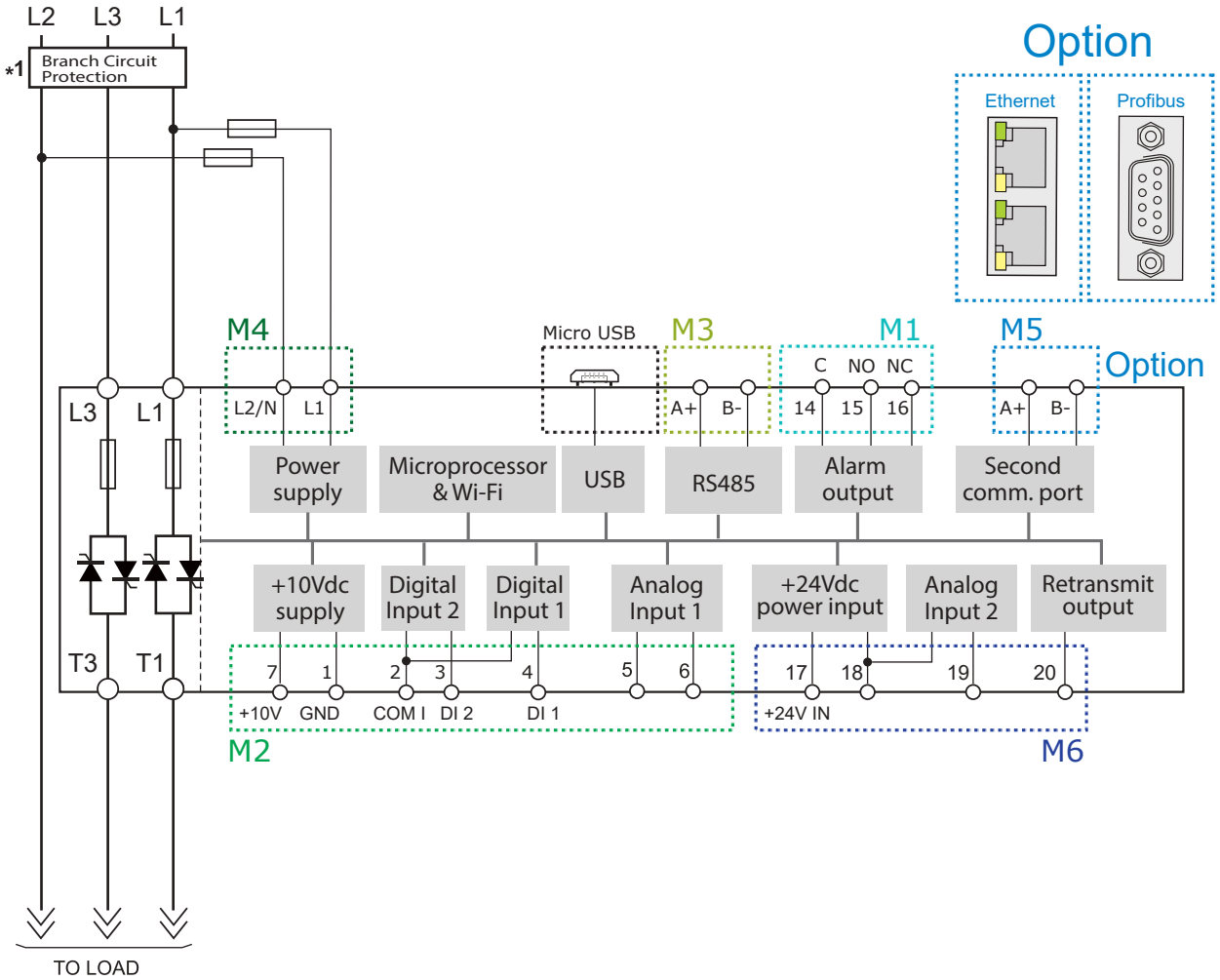

Caution: this procedure must be performed only by qualified persons

Indicative connection diagrams. Refer to local regulations for proper system protection.

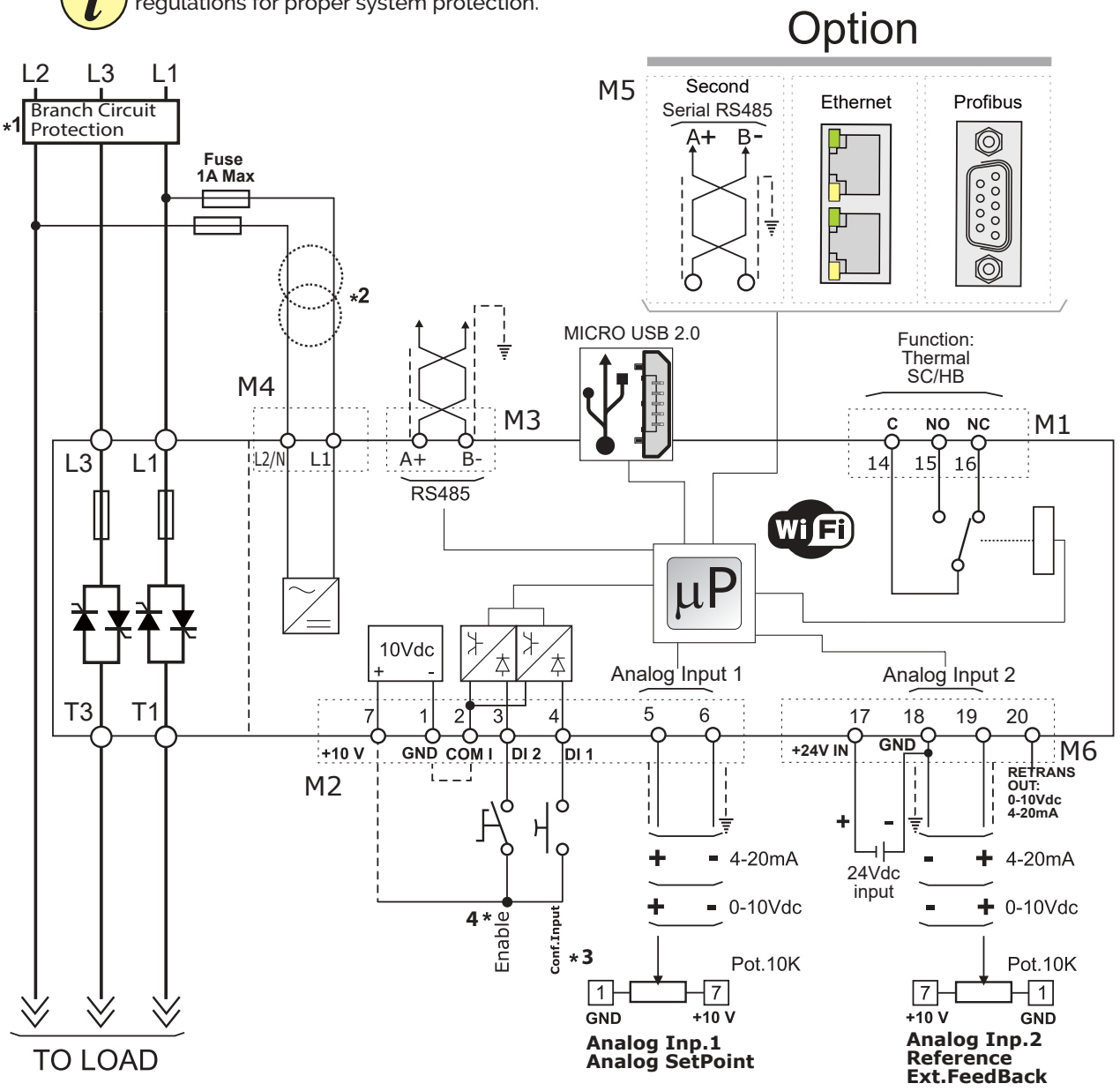

NOTE:

***1** The user installation must be protecting by electromagnetic circuit breaker or by fuse isolator. The Fuse must be branch circuit protection. For UL any listed UL branch circuit fuse would be acceptable as an external fuse, following national electric code guide for resistive heating of 125% load current rating to protect external wires.

***2** *The auxiliary voltage supply of the REVO C unit must be synchronized with load voltage power supply.* If the Auxiliary Voltage (written on the identification label) is different from Supply Voltage (to the load), use an external transformer as designated.

***3** For SSR input connection follow next page schematic.

***4 IMPORTANT! Starting Strategy (Enable) (See Chapter 13)**:

1: Feed the unit with L1-L2-L3 power voltage supply

2: Feed the auxiliary supply

3: Close the Enable contact to start with the regulation

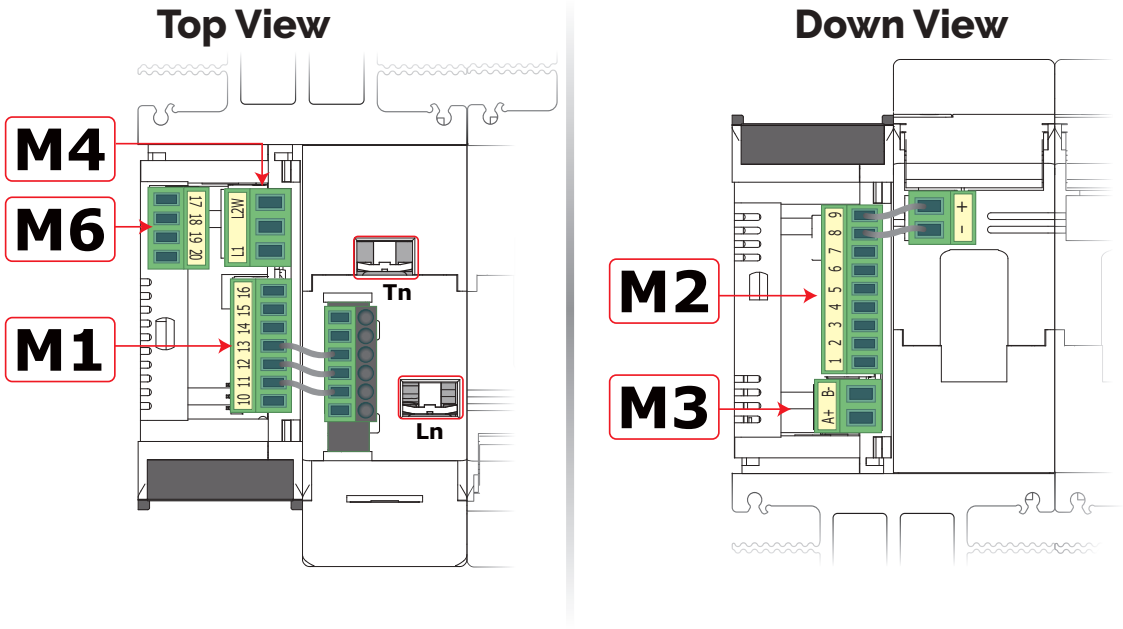

8.3.1 SSR Control Input schematic

For SSR input use follow the schematic below and configure Digital Input 1 as Fast Enable.

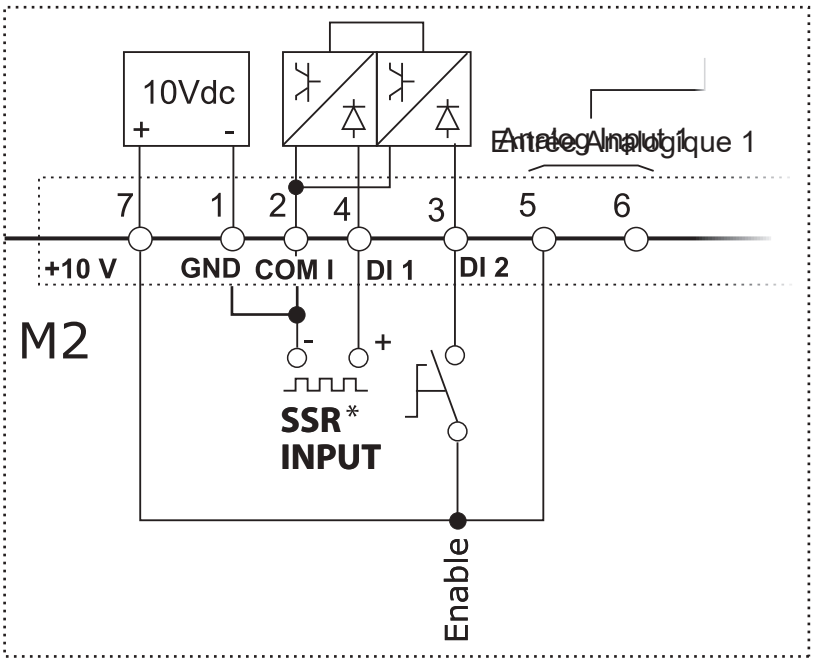

*** SSR Input:** 4÷30Vdc 5mA Max (ON ≥4Vdc / OFF <1Vdc)
Frequency 3Hz Max - On time min. 100 ms

8.4 Connection Diagram for 3 phases (control on 2 phases)

Caution: this procedure must be performed only by qualified persons.

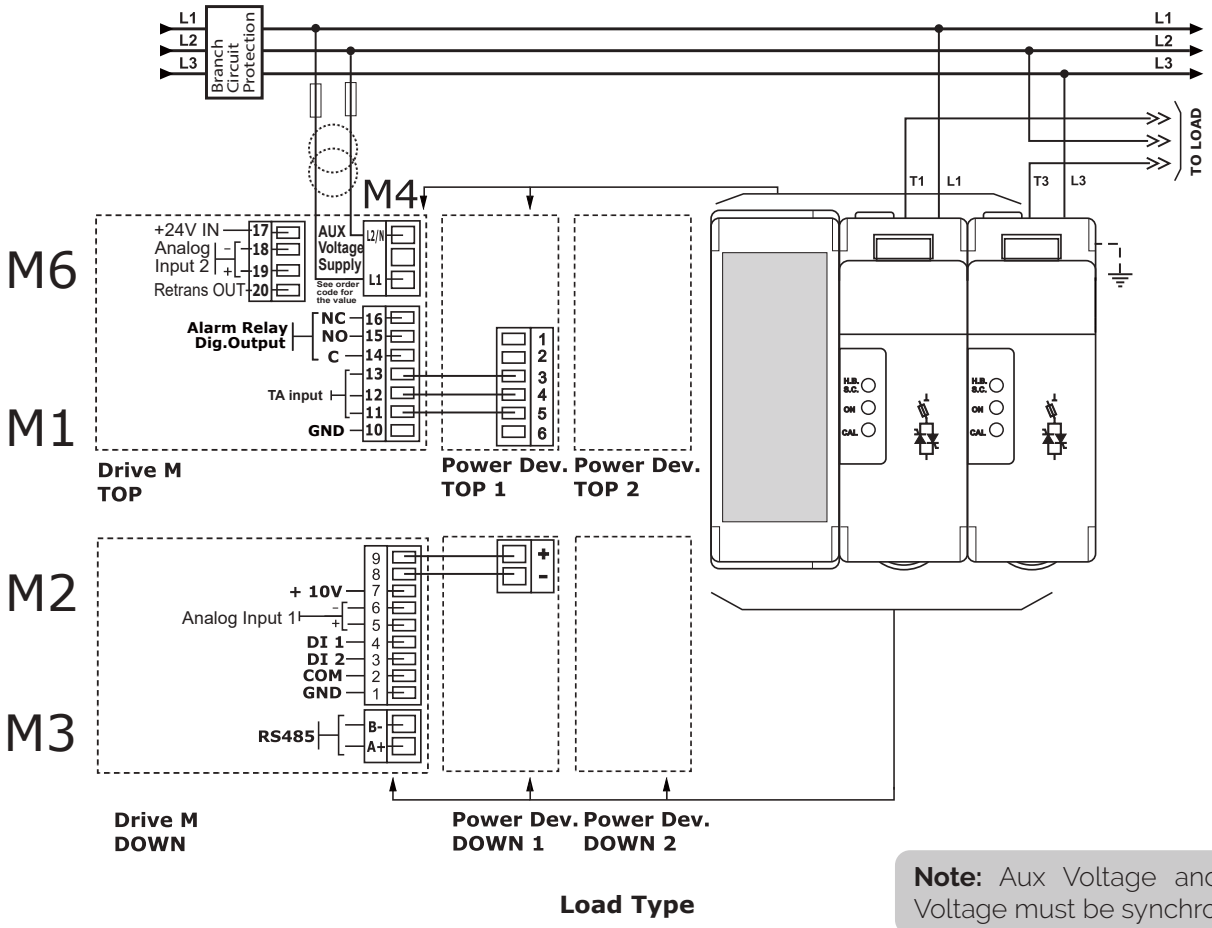

Note: Aux Voltage and Load Voltage must be synchronized

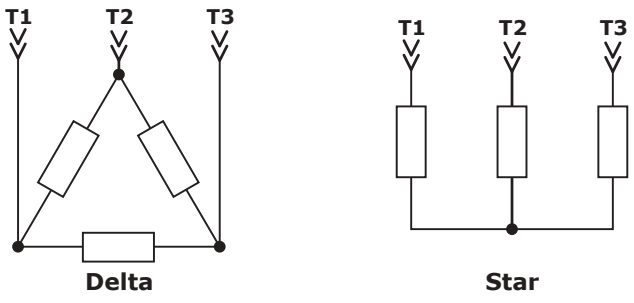

9 Control Panel

The Control Panel is placed on the front of the thyristor unit, on his display you can visualize the alarms, the input and output signals and all the configuration parameters.



Output Current RMS



Output Voltage (RMS)



Output Power (Average)



Alarms

On the home page the keys are used as follows:

Press...		to...
F	Function	Scroll through the parameters on the home page
L/R	Local/Remote	Switch between local and remote set point for power demand
▼	Up	Increment power demand set point when set to local
▲	Down	Decrement power demand set point when set to local
F + L/R		Press and hold for about two seconds to access the menus

To view the status parameters:

- Press Function F once to advance from one parameter to the next

To set the set point locally:

- Press Local/Remote L/R (Note: indicator 1 flashes steadily when set point is set locally)
- Use Down ▼ and/or Up ▲ to set the local set point.

9.1 Menu navigation

The menus are accessible using the control panel keypad and display.

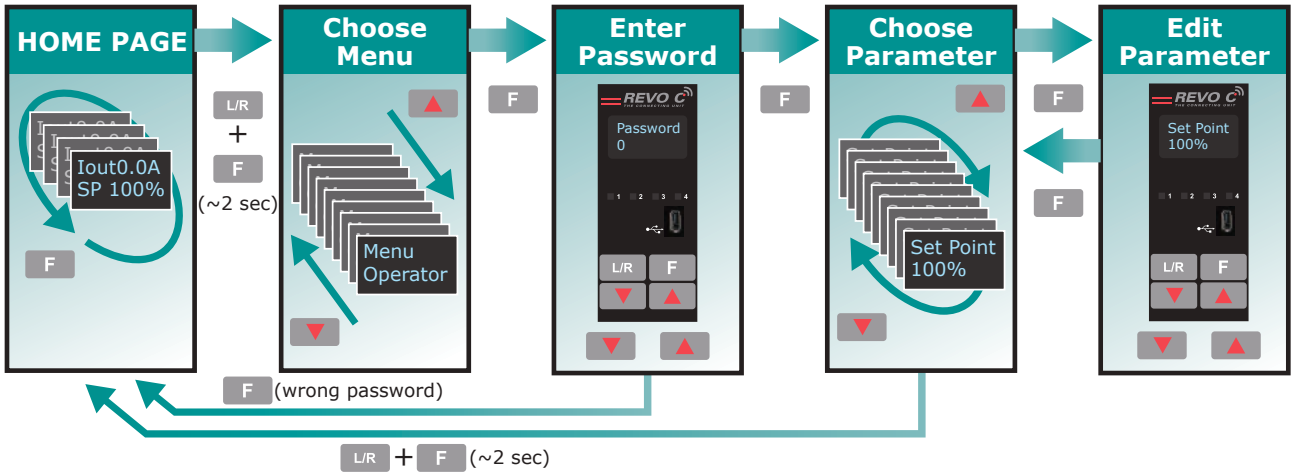

To access a menu and edit a setting:

1. Press and hold Local/Remote and Function together L/R + F until the upper display flashes Menu.
2. Press Up ▲ to choose the menu. (Press down ▼ if you overshoot the menu you want).
3. Press function F to advance to the password prompt.
4. Use up ▲ and/or down ▼ to set the password (see the table).
5. Press function F to enter the password and advance to the first parameter of the menu.
6. Press Up ▲ to advance to the next parameter and repeat to reach the desired parameter.
7. Press function F to start editing the parameter. The parameter name flashes in the upper display.
8. Use Up ▲ and/or down ▼ to edit the parameter setting.
9. Press function F to enter the new setting. The parameter name stops flashing.
10. Press and hold local/remote and function together L/R + F for about two seconds to exit the menus.

Menu	Password	Parameter used to...
Operator	0	View measured values and basic settings including current, voltage and set point
Setup	2	Configure the power controller for the load
Adv Setup	10	Configure the operation and performance of the power controller in the application
Hardware	5	Configure the functions of the analog and digital inputs and outputs, and the re-transmission parameters
Comm	3	Configure field bus communicating parameters
Monitoring	0	View measured and calculated values and other read-only parameters

9.2 Control Panel Led

The four indicators on the control panel show the general state of the power controller.



1	Local/Remote	Flashing	Power output set locally or via communications
		Off	Power output set remotely (via analog input)
2	Enable	On	Output enabled
		Off	Output disabled
3	Communications	Flashing	Active communications
4	Alarm	Flashing	Active alarm
		Off	No alarm

9.3 Displayed alarms

Alarm	Description
HeatBrk	Heater Break
Aux High	Aux voltage too high
Aux Low	Aux voltage too low
ComError	Communication Watchdog error
Line Loss	Line power not detected
SD Error	SD card error
SHRT	Short Circuit on SCR
Line Loss	L1 and L2 not detected

9.4 Parameter list

This chapter describes the parameter on the menus accessed via the control panel and Configurator software. To learn how to access the menus described below see "Menu navigation" chapter.

Menu Listing

The table below lists the parameters found on each menu. See the following pages for descriptions and other details of each parameter.

Operator	Setup	Advanced Setup	Hardware	Communication	Monitoring
Set Point	Out Scale	Firing Type	Analog in 1	Port 1 Baud	Dig in 1
Volts Out	Nom Line V	Min Cycle	Analog in 2	Port 1 Addr	Dig in 2
Current	Nominal I	Start Ramp	An2 Funct	Port 2 Baud	Enable
Power	SP Select	Delay	DI1 Functn	Watchdog	SP Source
Volts In		Cycle Time	DI2 Functn	WD Reset	Analog In1
Frequency		Feedback	Alm Out Fn	Wi-Fi Addr	Analog In2
Pwr Factor		Pb Power	Retransmit	Field Name	SW Ver
Load Ω		Ti Power	Rtx Scale	Unit Name	SW Rel
Out Scale		HB Sense	Rtx Type	Port 2 Addr	Unit Type
Nom Line V		HB Delay	Start Disp	Port 2	Max Voltage
Nominal I		Logging		Wi-Fi	Max Current
		Log Period			Aux Voltage
					Serial No.

Read/write Read only

9.4.1 Operator Menu

This section describes each item on the operator menu. Use this menu to view the measured values and basic settings of the power controller. **The password to access this menu is 0.**

Parameter Name	Description	Range	Unit	Modbus Address	Par. Type
Set Point	View the set point	0 to 100	%	15	Read Only
Volts Out	Indicates the average (RMS) voltage of all phases	0 to 1023	V	10	Read Only
Current	Indicates the average (RMS) current of all phases	0 to 1023	V	11	Read Only
Power	Indicates the average (RMS) power output	0 to 100	%	12	Read Only
Volts In	Indicates the average (RMS) voltage input	0 to 65535	V	47	Read Only
Frequency	Indicates frequency of the power input	0 to 655.35	Hz	9	Read Only
Pwr Factor	Indicates power factor of the output power	0 to 1000		102	Read Only
Load Ω	Indicates the resistance of the load	0 to 655.35	Ω	46	Read Only
Out Scale	Indicates the percentage by which the power demand set point is scaled	0 to 100.0	%	16	Read Only
Nom Line V	Indicates the user-set, nominal value for the line voltage input	0 to 1023	V	37	Read Only
Nominal I	Indicates the user-set, nominal load current	0 to 999.9	A	38	Read Only

9.4.2 Setup Menu

This section describes each item on the setup menu. Use this menu to configure the power controller for the load. **The password to access this menu is 2.**

Parameter Name	Description	Range	Unit	Modbus Address	Par. Type
Out Scale	Set the percentage by which the set point is scaled. For example, if a 0 to 10V analog input providing the set point is 5V and output scaling is 80% then the effective set point is 40%	0 to 100.0	%	16	Read Write

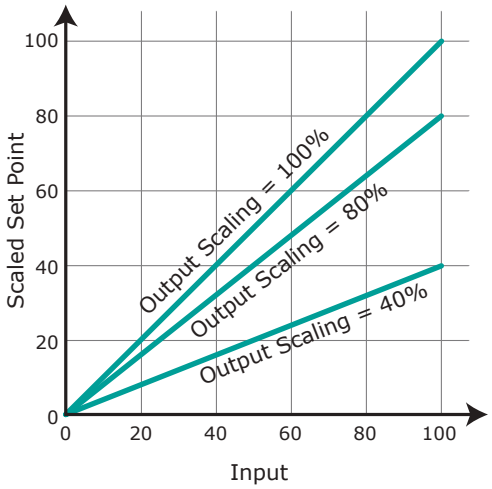

Parameter Name	Description	Default	Range	Unit	Modbus Address	Par. Type
Nom Line V	Set the nominal value for the line voltage input	220V	0 to 1023	V	37	Read Write
Nominal I	Set the nominal load current	Maximum current	0 to 6000,0	A	38	Read Write
SP select	Choose the source for the remote set point	0			61	Read Write

Option	Value
Analog In 1	0
Analog In 2	1

9.4.3 Advanced Setup Menu

This section describes each item on the advanced setup menu. Use this menu to configure the power switching, closed loop control of power and adjustable settings for data logging and heater bakeout. **The password to access this menu is 10.**

Parameter Name	Description	Default	Modbus Address	Par. Type
Firing Type	Choose the firing mode	3	18	Read Write

Option	Value
Zero Cross	1
Burst fire	3
DEFAULT: Burst Fire	3

Parameter Name	Description	Default	Range	Unit	Modbus Address	Par. Type
Min Cycles	Set the minimum number of On cycles and off cycles for burst firing	8	0 to 999.9	n°	20	Read Write
Start Ramp	Set the number of half cycles over which the power ramps each time the output turns on	0	0 to 1024	n°	25	Read Write
Delay	Set the firing delay degrees. Applies to burst firing with delay trigger	1	1 to 255	°	22	Read Write
Cycle time	Set the duration of one on-off cycle in increments of 50mSec. Applies to zero crossing	60 (3 sec)	0 to 255 0 to 12,75 sec)		24	Read Write
Feedback	Choose the feed-back type	1			19	Read Write

Option	Description	Value
V^2	Voltage squared	0
None	No feed-back	1
I^2	Current squared	2
Voltage	Voltage	32
Current	Current	64
Power	Power	128
External	External signal via analog input 2	256
DEFAULT: None		1

Parameter Name	Description	Default	Range	Unit	Modbus Address	Par. Type
Pb Power	Set the gain for the main loop. A larger value yields a larger adjustment for a given deviation	10%	0 to 255	%	26	Read Write
Ti Power	Set how aggressively the integral part of the control algorithm acts. A larger settings yields a larger adjustment for a given deviation over a given time	50	0 to 255		27	Read Write
HB Sense	Set the threshold of resistance that activates the Heater Break alarm. This setting is in percentage of the nominal load resistance	100%	0 to 100.0	%	29	Read Write
HB Delay	Set a delay between when the resistance drops below the value set for a heater break sensitivity and when the heater break alarm is indicated. This set increments of 50mSec	50 (2,5 sec)	0 to 255 (0 to 12,75 sec)		28	Read Write
Logging	Enable or disable data logging on the internal SD card	0			139	Read Write

Option	Value
Off	0
On	1
DEFAULT: Off	0

Parameter Name	Description	Default	Range	Unit	Modbus Address	Par. Type
Log Period	Set how often data is logged	5 sec	0 to 255	sec	70	Read Write

9.4.4 Hardware Menu

This section describes each item on the hardware menu. Use this menu to configure how the inputs and outputs are used in the application. **The password to access this menu is 5.**

Parameter Name	Description	Default	Modbus Address	Par. Type
Analog In 1	Choose the type of signal to be measured by analog input 1	1	44	Read Write

Option	Description	Value
0-10V	0 to 10 Vdc or 10,000Ω	1
4-20mA	4 to 20 mAdc	2
0-20mA	0 to 20 mAdc	3
DEFAULT: 0-10V		1

Parameter Name	Description	Default	Modbus Address	Par. Type
Analog In 2	Choose the type of signal to be measured by analog input 2	1	105	Read Write

Option	Description	Value
0-10V	0 to 10 Vdc or 10,000Ω	1
4-20mA	4 to 20 mAdc	2
0-20mA	0 to 20 mAdc	3
DEFAULT: 0-10V		1

Parameter Name	Description	Default	Modbus Address	Par. Type
An2 Funct	Choose how the signal measured by analog input 2 is used	1	116	Read Write

Option	Description	Value
Feedback	External feed-back	1
Set Point	Power Demand set point	2
DEFAULT: Feedback		1

Parameter Name	Description	Default	Modbus Address	Par. Type
DI1 Functn	Choose how the signal detected by digital input 1 is used	2	32	Read Write

Option	Description	Value
Enable	Enable power output	0
V Feedback	Use voltage feed-back when on	2
Local / Rmt	Local when on / Remote when off	3
SP AI1/AI2	Select remote set point source: analog input 1 when off or analog input 2 when on	5
Logging	Enable logging	6
FastEn	Fast Enable*	8
Alarm reset		9
DEFAULT: Voltage Feed-back		2

*** SSR Input:** 4÷30Vdc 5mA Max (ON ≥4Vdc / OFF <1Vdc) Frequency 3Hz Max - On time min. 100 ms

Parameter Name	Description	Default	Modbus Address	Par. Type
DI2 Functn	Choose how the signal detected by digital input 2 is used	0	33	Read Write

Option	Description	Value
Enable	Enable power output	0
V Feedback	Use voltage feed-back when on	2
Local / Rmt	Local when on / Remote when off	3
SP AI1/AI2	Select remote set point source: analog input 1 when off or analog input 2 when on	5
Logging	Enable logging	6
FastEn	Fast Enable*	8
Alarm reset		9
DEFAULT: Enable		0

*** SSR Input:** 4÷30Vdc 5mA Max (ON ≥4Vdc / OFF <1Vdc) Frequency 3Hz Max - On time min. 100 ms

Parameter Name	Description	Default	Modbus Address	Par. Type
Alm Out Fn	Choose for which conditions the digital output indicates alarm. The output always indicate an alarm when the heat sink is over temperature. The digital output is energized for normal operating condition and de-energized when the power controller is off or when there is an alarm. **Note!:** The power controller monitors for heater break or short circuit condition only when included in the option selected for Alarm Output Function	1	34	Read Write

Option	Description	Bit
Heater Break	Heater Break	0
Short Circuit	Short circuit	1
Therm	SCR is over temperature	3
Communication	Communication watchdog error	4
DEFAULT		None

Alarm Bitwise is allowed

Parameter Name	Description	Default	Modbus Address	Par. Type
Retransmit	Choose wich parameter is retransmitted by the analog output	12	68	Read Write

Option	Description	Value
Set Point	Set point	15
Volts Out	RMS voltage output	10
Power	Average output power	12
Current	RMS current output	11
None	Do not retransmit value	0
DEFAULT: Power		12

Parameter Name	Description	Default	Range	Unit	Modbus Address	Par. Type
Rtx Scale	Set the value of retransmitted parameter to be represented by the full scale of the analog output. See the table below	0	0 to 9999		124	Read Write

Retransmit	Recommended Retransmission Scaling	Resulting Signal (4 to 20 mADC)	Resulting Signal (0 to 20 mADC)	Resulting Signal (0 to 10 VDC)	Max Value
Set Point	100	4mADC = 0% 20mADC = 100%	0mADC = 0% 20mADC = 100%	0VDC = 0% 10VDC = 100%	100.0
V Output	**xV** where **x** is the Nominal Line Voltage	4mADC = 0V 20mADC = xV	0mADC = 0V 20mADC = xV	0VDC = 0V 10VDC = xV	999.9
I Output	**xA** where **x** is the Nominal Line Current	4mADC = 0A 20mADC = xA	0mADC = 0A 20mADC = xA	0VDC = 0A 10VDC = xA	999.9
Power	100	4mADC = 0% 20mADC = 100%	0mADC = 0% 20mADC = 100%	0VDC = 0% 10VDC = 100%	100

Parameter Name	Description	Default	Modbus Address	Par. Type
Rtx Type	Choose type of signal for the retransmission output	1	69	Read Write

Option	Value
4-20mA	0
0-10V	1
0-20mA	2
DEFAULT: 0-10V	1

Parameter Name	Description	Default	Modbus Address	Par. Type
Start Disp	Choose which parameter is displayed on the home page at power-up	1	60	Read Write

Option	Value
Current	0
Volts Out	1
Power	2
DEFAULT: Voltage	1

9.4.5 Communication Menu

This section describes each item on the communication menu. Use this menu to configure the communication options. **The password to access this menu is 3.**

Parameter Name	Description	Default	Modbus Address	Par. Type
Port 1 Baud	Choose the baud rate for the primary serial port	2	30	Read Write

Option	Value
9600	0
19.2K	1
38.4K	2
115.2K	3
DEFAULT: 38.4K	2

Parameter Name	Description	Default	Range	Unit	Modbus Address	Par. Type
Port 1 Addr	Set the address for the primary serial port	1	0 to 255		31	Read Write
Port 2 Baud	Choose the baud rate for the primary serial port	2			45	Read Write

Option	Value
9600	0
19.2K	1
38.4K	2
115.2K	3
DEFAULT: 38.4K	2

Parameter Name	Description	Default	Modbus Address	Par. Type
Watchdog	Enable or disable the watchdog on the primary serial port	0	142	Read Write

Option	Value
Off	0
On	1
DEFAULT: Off	0

Parameter Name	Description	Default	Range	Unit	Modbus Address	Par. Type
WD Reset	Set the amount of time to wait for a communication message before triggering the watchdog error	5	0 to 255	Sec	143	Read Write
Wi-Fi Addr	Indicate the IP address of the WiFi connection in the power controller		0 to 255		94-95 96-97	Read Only
Field Name	Only with Profinet option		0 to 255		79-80 81-82	Read Only
Unit Name	Indicate the name of the unit		max 16 characters		83-84 85-86 87-88 89-90	Read Only
Port 2 Addr	Set the address for the secondary serial port or the Profibus Address	0	0 to 1024		122	Read Write
Port 2	Indicates the type of secondary communication port				119	Read Write

Option	Description	Value
Disabled	No secondary communication port	0
Ethernet	Modbus TCP or ProfiNet	1
RS-485	RS-485	2

Parameter Name	Description	Default	Modbus Address	Par. Type
Wi-Fi	Enable or disable WiFi communication	0	120	Read Write

Option	Value
Off	0
On	1
DEFAULT: Off	0

Caution: If Bus port is not connected or in error, all writable parameters are set to 0 value

9.4.6 Monitoring Menu

This section describes each item on the monitoring menu. Use this menu to view the states of digital input, values of analog input and information about the power controller such as serial number and software version.
The password to access this menu is 0.

Parameter Name	Description	Modbus Address	Par. Type
Dig In 1	Indicate the state of the signal to digital input 1	13 bit8	Read Only

Option	Value
Off	0
On	1

Parameter Name	Description	Modbus Address	Par. Type
Dig In 2	Indicate the state of the signal to digital input 2	13 bit9	Read Only

Option	Value
Off	0
On	1

Parameter Name	Description	Modbus Address	Par. Type
Enable	Indicate whether or not the power controller is enabled. The enable signal must be on for the unit to output power to the load	14 bit2	Read Only

Option	Value
Off	0
On	1

Parameter Name	Description	Modbus Address	Par. Type
SP Source	Indicate whether the power controller is local or remote set point mode	14 bit1	Read Only

Option	Description	Value
Local / Comms	Set Point via keypad or communication	2
Remote	Set Point via analog input	0

Parameter Name	Description	Range	Unit	Modbus Address	Par. Type
Analog In1	Indicates the percent of full scale measured by analog input 1	0 to 100.0	%	138	Read Only
Analog In2	Indicates the percent of full scale measured by analog input 2	0 to 100.0	%	137	Read Only
SW Ver	Indicates the software version number (x.xx.x)	0 to 65535		48	Read Only
SW Rel	Indicates the software release date year and week (yyww)	0 to 65535		49	Read Only
Unit Type	Indicates the type of power controller			36	Read Only

Option	Description	Value
RC 1	Single Phase	7
RC 2	Two Leg, three phase	8
RC 3	Three Leg, three phase	9
RC 3P	Three Leg, three phase with phase angle capability	10

Parameter Name	Description	Range	Unit	Modbus Address	Par. Type
Max Voltage	Indicates the maximum voltage rating of the power controller	0 to 1023	V	41	Read Only
Max Current	Indicates the maximum current capacity of the power controller	0 to 9999	A	62	Read Only
Aux Voltage	Indicates the measured line voltage	0 to 1023	V	43	Read Only
Serial No	Indicates the serial number of the power controller	0 to 9999		149-150 151-152	Read Only

10 Using the Configurator

Configurator software can be used like an alternative of the power controller's keypad and set the advanced features not available via the power controller's onboard user interface.
Here we explain how to use it.

10.1 Typical Uses

The software may be used during commissioning to:

- set internal parameter do determine how the power controller operates and performs;
- save and restore a setup, copy or clone one power controller to another;
- on a day-to-day basis to monitor operation and power usage;
- to examine performance in more detail to determine if any corrective actions are needed.

10.2 Communicating with Power Controllers

When commissioning the power controller, may be useful to connect via the USB port, located below the control panel's display, a computer, so it's possible to configure and examine the settings of the controller.
The controller's electronics is powered vis USB cable, so it's to possible inspect it before applying power.

⚠ **NOTE!** the power of the USB port is limited and not designed to power industrial cards, so it manages to feed only the essential parts of the electronics. For complete control, you need to power up the auxiliaries of the power controller.

10.3 Recipes

A recipe is a file that store the settings of power controller internal parameter.
Is used to save a power controller configuration or restore an existing configuration in a power controller.

10.3.1 Upload a recipe

A recipe is created using upload function Configurator software and saving it as a file on the computer.

10.3.2 Download a recipe

An existing recipe can be download to a power controller using download function in Configurator software

10.4 How To

Here the procedures for common tasks are described step-by-step.

10.4.1 Install and communication with the power controller

Procedure to install the Configurator:

1) Locate t lhe installer

   direct link: https://www.cdautomation.com/wp-content/uploads/ThyristorConfigurator_ver6.zip

   On our website: "Download" page --> Software & Drivers
   or
   Product page --> SW/Comm tab

2) Double-click on the installer program to start installation.

3) Follow the on-screen instructions.

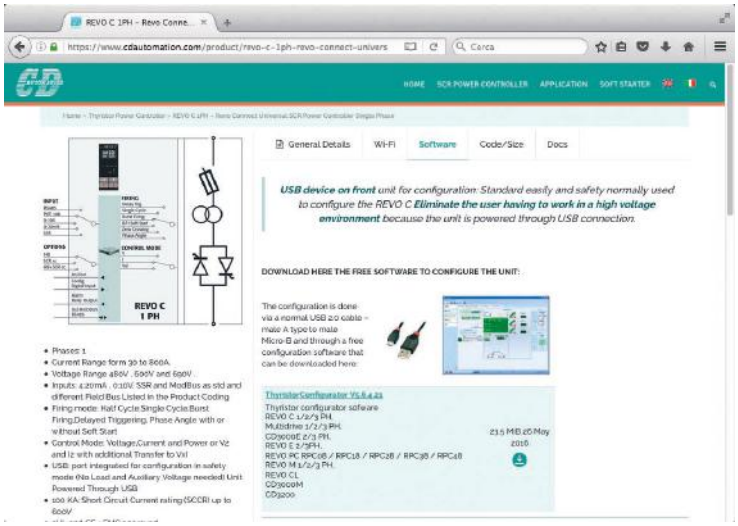

Procedure to communicate with a power controller:

1) **if used direct USB connection:**
   - Connect the USB cable between the computer and the micro USB connector on the power controller's keypad
   - if necessary, wait for the USB driver to install.
2) **if used RS-485 connection** connect the power controller terminal to computer RS485 port. Usually the standard pc do not have a RS485 port so a USB-to-485 converter is required.
3) Launch the Configurator software an select
   - **REVO C:** for single phase
   - **REVO C 2PH:** for 2 phase power controller
   - **REVO C 3PH:** for 3 phase power controller

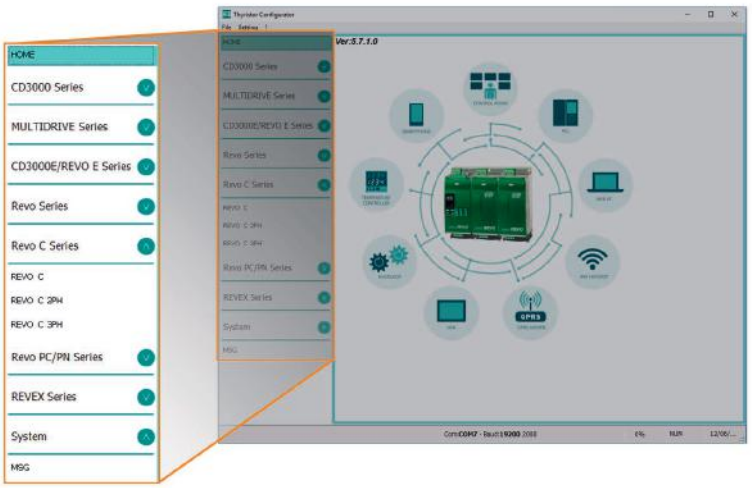

4) Choose **Serial Port** From the **Setting -> Serial Port** menu
5) In value **Port**, select the connected COM port to the power controller (see the note below)
6) To verify communications, click **Test**
7) Click **OK**

NOTE! to determine which port is connected to the power controller, you can:

- in the Windows¨ Device Manager under Ports (COM & LPT), looking for the COM port named "LPC USB VCOM Port (COMx)" where x is the port number
- On configurator software:
  - open the software without connect the unit and see the available COM port on COM port window setting,
  - close the COM setting window,
  - connect the USB cable to the power controller (wait for the USB driver to install if necessary),
  - open the COM setting window and see the added COM number and select it.

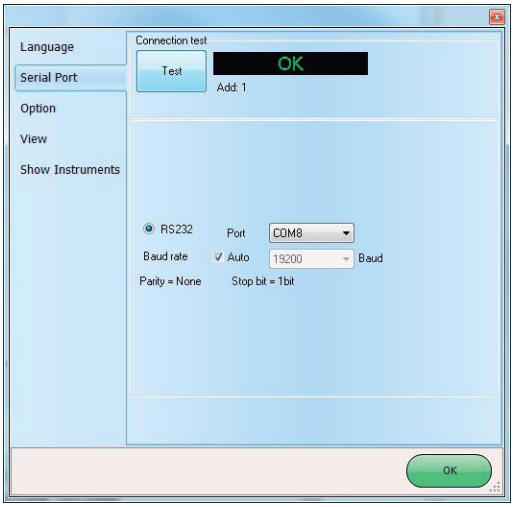

10.5 Using the Configurator

After software has been installed, communication has been set up and model type selected, is possible operate with power controller.

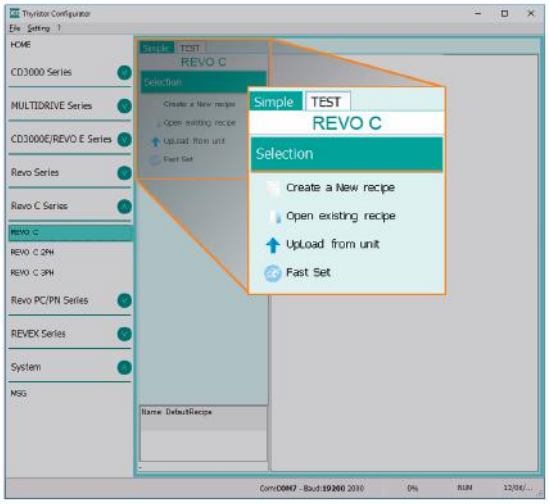

10.5.1 To view or save a power controller's settings using "Simple" view section:

1) Click **Simple**, if not already on the simple view
2) Click **Upload from unit**
3) Set the address, if necessary
4) Click **READ->**
5) Wait for the software to read the parameter settings
6) Click **OK**
7) If need save the settings in a recipe file:
   - Click **Save**
   - Name the recipe
   - Click **Save** button

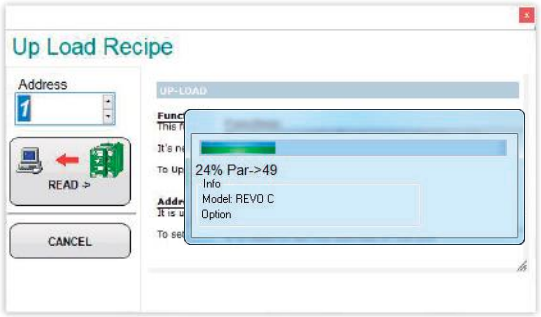

NOTE! In the simple view the change are not "live", so to take effect the change in simple section is necessary to download it following the download procedure.

10.5.2 To edit a setting in a recipe:

1) Click **Simple**, if not already on the simple view
2) Click **Open** existing recipe
3) Locate and select the recipe file and click **Open**
4) Click **OK**
5) Click the menu with the setting you want to change
   - SETUP
   - ADVANCED SETUP
   - HARDWARE
   - COMMUNICATIONS

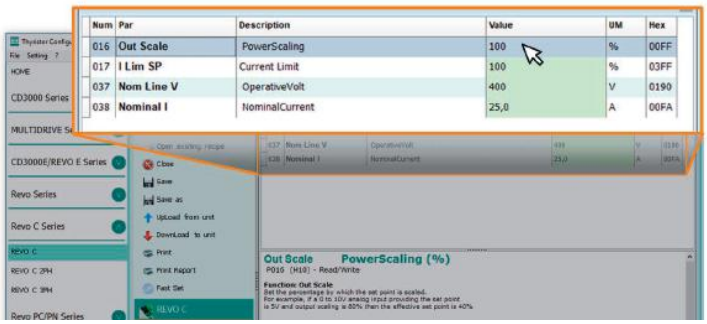

6) Select the value you want to change
7) Edit the value with the increment and decrement buttons in the field or type the new value and press the Enter key
8) Repeat steps 5 to 7 for all the changes you want to make
9) To save the settings in a recipe file:
   - Click **Save**
   - Name the recipe
   - Click **Save** button

10.5.3 To download a recipe file into a power controller:

1) Click **Simple**, if not already on the Simple view
2) Click **Open** existing recipe
3) Locate and select the recipe file and click **Open**
4) Click **OK**
5) Click **Download to unit**
6) Set the address, if necessary
7) Click **SEND->**
8) Wait for the software to write the parameter settings
9) Click **OK**

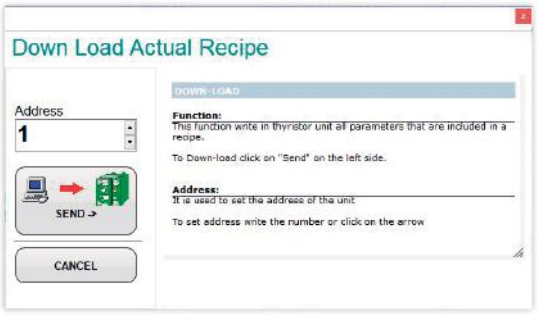

10.5.4 To monitor a power controller with the Test view:

1) Click **Test**, if not already on the test view
2) Click **Online**

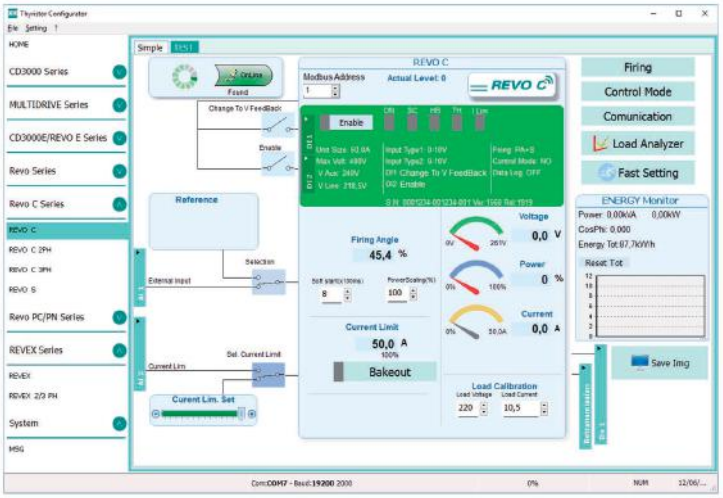

10.5.5 To log in on the test view to change the digital input and analog input functions:

1) Click the **Access Level** value (zero when logged out)
2) Type the password: **1111**
3) Click **OK**

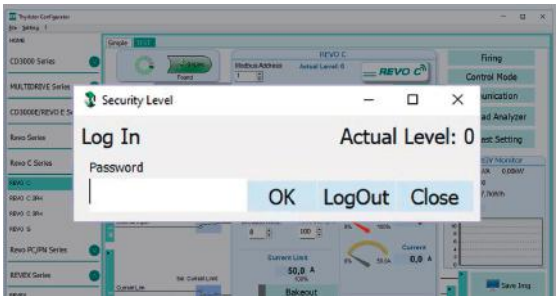

10.5.6 To log out the test view:

1) Click the Access Level value
2) Click **Log out**
3) Click **OK**

10.5.7 To view data on the scope:

1) Click **Test**, if not already on the test view
2) Click **Online**
3) Click **Load Analyzer**
4) For each of up to three channels (Ch 1 to Ch 3):
   - With **PV1** choose the value to monitor
   - Select **Show**
   - Click the color swatch to change the color
   - Click the button to turn the channel on.



10.5.8 To reset the power totals:

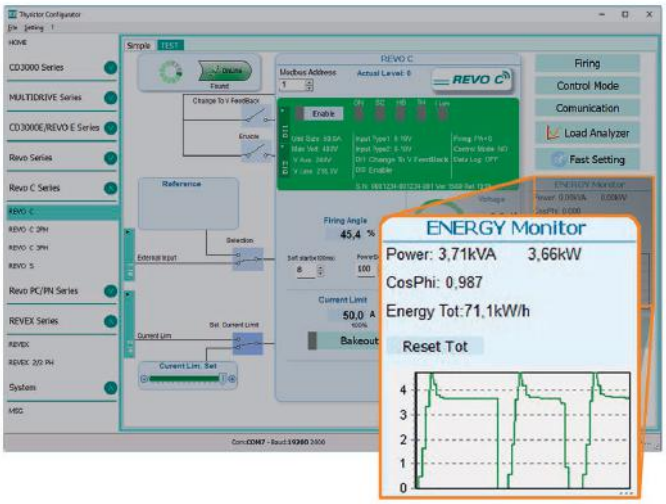

1) Click **Test**, if not already on the test view
2) Click **Online**
3) Click **Reset Totals**
4) Click **Yes**

10.5.9 Setting Up and Using Data Logging

To set up data logging:

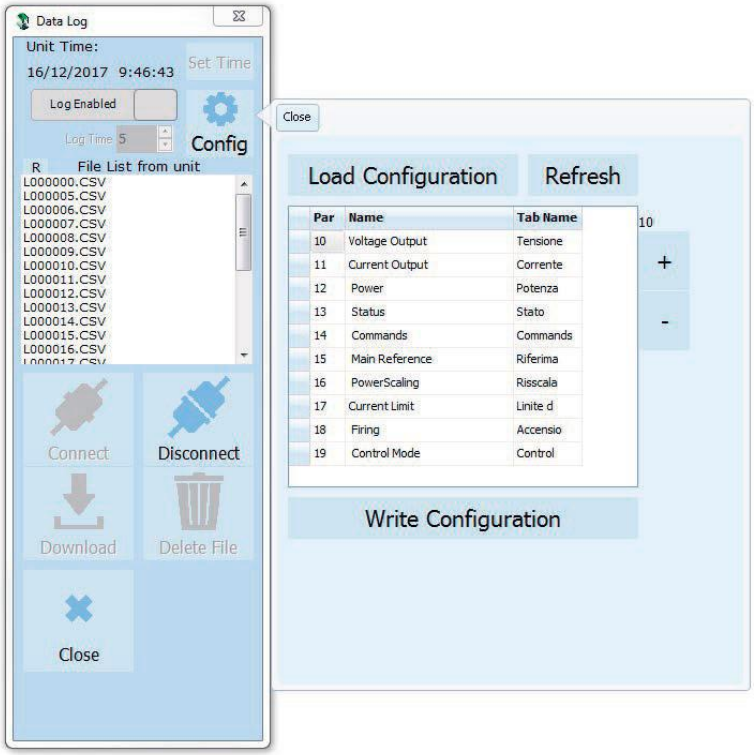

1) Click **Test**, if not already on the test view
2) Click **Online**
3) Click **Load Analyzer**
4) On the **Load Analyzer** view click **Data Log**
5) In the **Data Log** window ensure the slider is set to **Log Enabled**
6) Click **Set Time**
7) If necessary Set the date and time and close the date/time window
8) Set **Log Time** to the number of seconds between records
9) Click **Connect**
10) Click **Config**
11) Click **Load Configuration** to view the current list of logged parameters
12) For up to ten parameters to log:
    -Click **+** to add a parameter to the list
    -In a row in the list either: Type a parameter's Modbus address in the **Par** field
    OR
    -Select the parameter from the drop down list in the **Name** field
13) Click **Write Configuration** to send the parameter list to the controller
14) Click **Close**
15) Click **Disconnect**
16) Close the **Data Log** window

10.5.10 To retrieve a data log file from the power controller:

1) Click **Test**, if not already on the test view
2) Click **Online**
3) Click **Load Analyzer**
4) Click **Connect**
5) Select a file from the list
6) Click **Download**
7) Select a location and click **Save**
8) Wait for the file to download. This can take up to ten minutes for the largest file
9) To delete the log file from the controller memory, if desired, click **Delete File**
10) Click **Disconnect**
11) Close the **Data Log** window
12) Close the **Load Analyzer** window

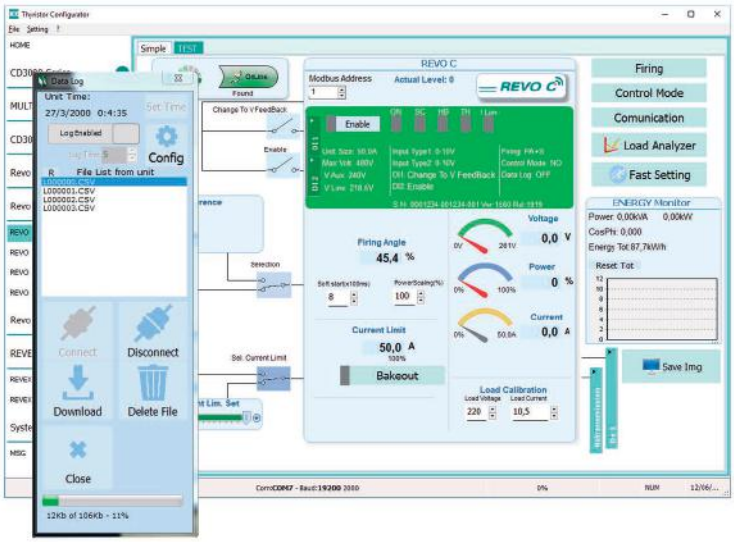

10.6 Software General information

Here it is described the Configurator Software and how use it.

10.6.1 Program Window



Main Menu

Access these menus.

File menu

Exit: close the program

Setting menu

Language: open language Settings dialog box

Serial Port: open Serial Port dialog box

Option: open General Option dialog box

? (Help) menu

Message Log: open a serial communication message view

About: displays the About dialog with the program name and version and contact information

Instruments selector

Select the right instrument to use:

HOME: the default view

REVO-C: open the Simple and Test views for a single-phase power controller

REVO-C 3PH: access the Simple and Test views for a three-phase power controller

MSG: opens a serial communication message view

Status Bar

Indicates information such as time and date, communications port and baud rate.

10.6.2 Simple Section

This section is used to create, save, upload and download recipes of parameters settings. Can be used also to see the settings in a controller.
Simple page is the default page when select the model using the Model Button, but If not selected is possible access it clicking the Simple tab below the main menu.

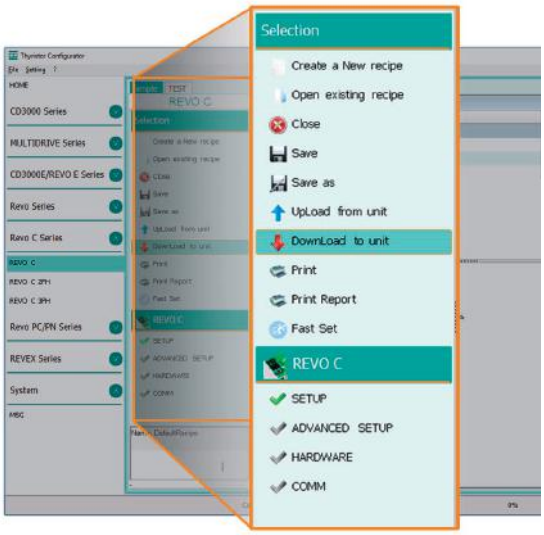

NOTE! This section is not "OnLine" so the parameter values are not updated continuously. They are read only when you upload them from the power controller.

To manage recipe click on:

- **Create a New recipe**: create a recipe file with the standard default settings
- **Open existing recipe**: open an existing recipe file
- **Upload from unit**: create a new recipe with the value uploaded from a connected power controller
- **Close**: close the current recipe
- **Save**: save the recipe in a file
- **Save as**: save a copy of the recipe in a file
- **Download to unit**: send the current recipe parameters in the connected power controller
- **Print**: print the recipe (see sample at right)
- **Print report**: print the recipe (see sample at right)

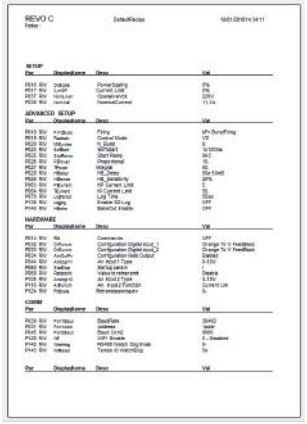

To edit the actual recipe values click a parameter menu name:

- SETUP
- ADVANCED SETUP
- HARDWARE
- COMMUNICATIONS

and after click on the value and modify it.

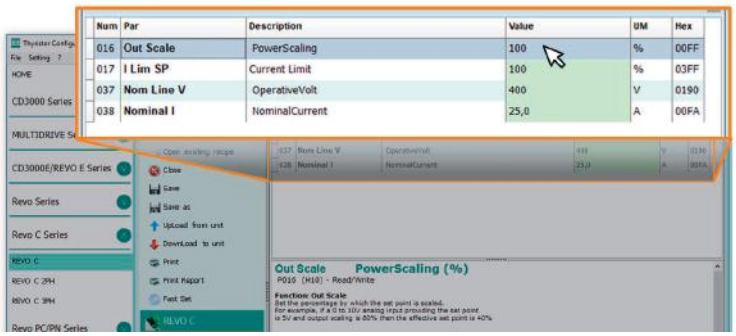

NOTE! Changes to the values here affect the open recipe only. To apply these changes to the power controller settings, download them to the power controller using the Download to unit option.

10.6.3 Test Section

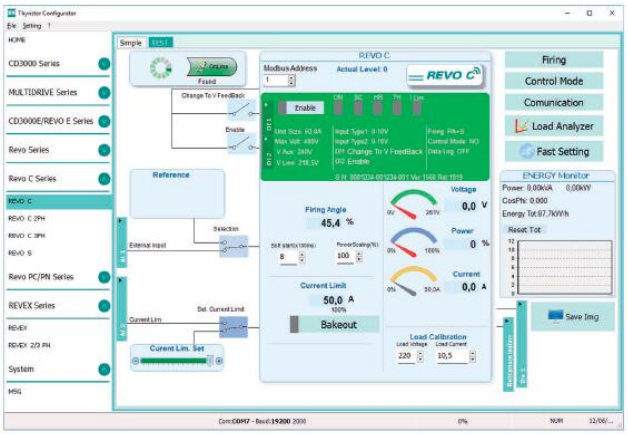

This section is used to monitor and adjust the operation of the power controller in real time using RS485 or USB communication port.
After select the model, is possible access to this section clicking the "TEST" tab below the main menu.

Operating on TEST Section:

Online button: is the button to start or stop communication updates with the power controller

After communication start a green communication status indicator sweeps clockwise when the software is communicating right with a power controller, is the connection link is broken the color will become red

Address: value used to set the power controller address

Access Level: click the value to log in or out. Default Password address is "1111".

To configure and monitor the digital inputs:

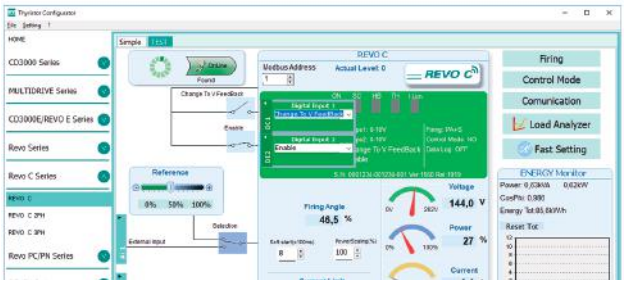

Digital input states and functions:
show whether each input detects an open or closed circuit and the function the input performs.

Digital Input States and Function Selectors:
set the function for each digital input. Click DI1 or DI2 to expand the options.

Status and Setup Indicators:

Digital input status: light on when the input is a a closed circuit

Enable indicator: light on when the power controller is enabled

Enable/Disable button: click on to enable the power controller if a digital input is not configured for this function

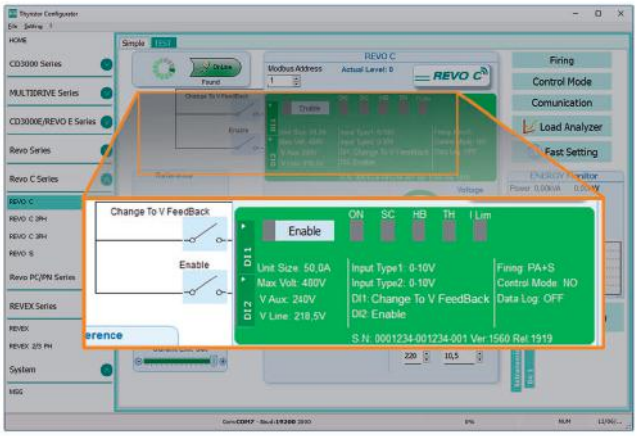

ON indicator: light on when there is demand for the output to be on

SC indicator: light on when there is a shorted SCR alarm active

HB indicator: light on when there is a heater break alarm active

TH indicator: light on when the heat sink over temperature alarm is active

I Lim indicator: light on when the load current exceeds the current limit setting

Unit Size: Indicate the maximum rated current of the power controller

Max Volt: indicate the maximum rated voltage for the power controller

V Aux: indicate the voltage the auxiliary input is set to use for powering the electronics

Input Type1: indicate the signal analog input 1's type

Input Type2: indicate the signal analog input 2's type

DI1: indicate digital input 1's function

DI2: indicate digital input 2's function

Firing: indicate the firing type the power controller is set to use

Feedback: indicate the feedback type the power controller is set to use

Data Log: indicate the Data Log status.

Buttons setup options:

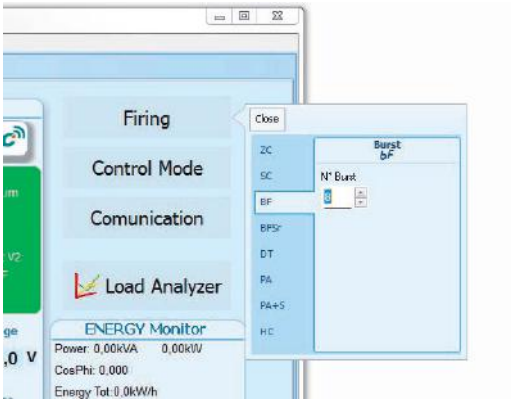

Firing: view and set the firing type and the associated parameters

Feedback: view and set feedback type

Communication: view and set communication options for ports, protocols and fieldbus

Configure and monitor the analog inputs:

Analog Input 1: click Ai 1 to view the signal type

Input Local/Remote selection button: click to toggle between using the signal received at analog input 1 (remote) or the slider (local) to set the set point.

Reference: drag the slider, click the increment (+) or decrement (-) buttons or click one of the three percentages (0%, 50% or 100%) to set the set point when the set point source is set to local.

Analog Input 2: click Ai 2 to view the signal type and function

To configure and monitor the power controller:

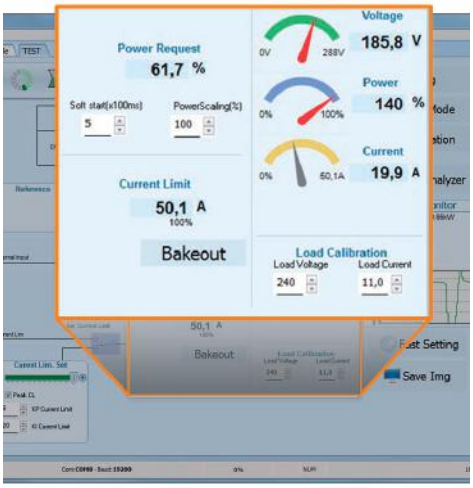

Power Request: show the set point signal from analog input 1. The value is a percent of full scale or can be set with the reference slider

Soft Start Time: show the time over which set point changes are ramped

Output Scaling: show the scaling applied to the set point signal before it is used by the control loop

Voltage indicator: show RMS load voltage

Power indicator: show RMS load power

Current indicator: show the RMS load current

Current Limit Set: indicates the current limit set point

Bakeout button: click to view and set the heater bakeout feature options

Load Calibration: set and view the nominal line voltage and nominal load current settings for the application.

NOTE! The Load Calibration settings, Load Voltage and Load Current define 100% power for the load.

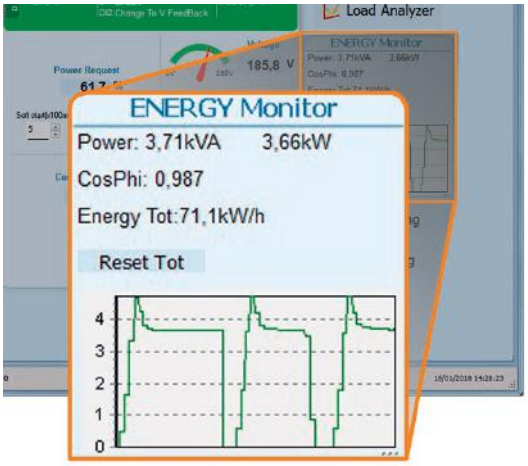

Energy Monitor: indicates power, power factor and energy usage over time which may be reset with the **Reset Tot** button.

Data Log: If present is used to configure the data logging feature data logs.

Save Image: click to save a JPEG file with an image of the test Page.

10.6.4. Load Analyzer

Load Analyzer is used for monitoring values graphically represent

Click on **Load Analyzer** button on the test page will open Load Analyzer window.

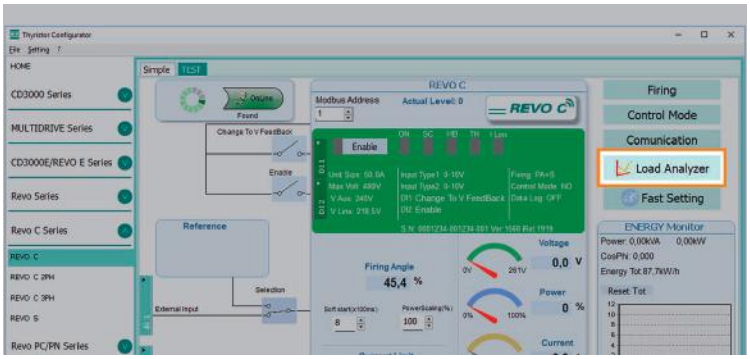



Is possible see 3 channels (Ch 1, Ch 2 and Ch 3). For each channel configure a pen on the graph:

- **On/Off button**: click to start trending data reading
- **PV**: choose the parameter to trend
- **Show**: set this option to display or hide the trend
- **Show Mark**: set this option to display data markers along the trend in the graph area
- **Live!**: click to view the current waveform on the graph.
- **Data Log**: click to open the Data Log window.

The **Historical** options to control the movement of the chart:

- **Scroll left-click**: move the chart left to view more recent data
- **Stop/Play-click**: toggle the live view or Hystorical view of graphic signal
- **Scroll right-click**: move the chart right to view older data

The **Actions** to:

- **Clear**: to clear the data from the graph
- **Save**: to save a JPEG image of the **Load Analyzer** window with the current trends
- **Export**: to open a window that includes the trend graph and table with the currently displayed data that can be saved as a JPEG or exported to a CSV file.

Use the **X – Scale** settings to adjust the horizontal (time) axis:

- **Min**: set the minutes of data displayed
- **Sec**: set the seconds of data displayed
- **Filter**: set this option to filter the data

Use the **Y – Scale** settings to adjust the vertical (percent of full scale) axis

- **Max**: set the maximum value for the vertical axis
- **Reset**: click to reset the vertical axis scaling

NOTE! Use the increment (up arrow) and decrement (down arrow) buttons to adjust the x and y scales. Numeric entry does not allow the full range of values to be set.

10.6.5 Data Log Window

In the power controller the data log window is used to manage files and set up logging parameter like log interval time and date/time in rtc

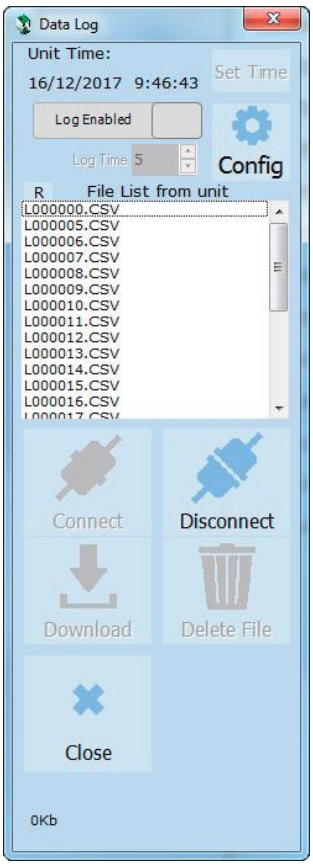

Log Enabled/Log Disabled slider: Enable and disable data logging function.

Log Time: the time between data log records in seconds

Config: opens the data log configuration window to customize the variable to log

File List: lists the data log files available in the power controller

Connect: the power controller enter in log mode and permit the file manage

Disconnect: the power controller close the log mode

Download: download the selected file from the power controller to the computer

Delete File: erases the selected file from the power controller

Close: closes the Data Log window and close the log mode on power controller.

10.6.6 Data Log Configuration window

Data log configuration window is used to view and set the parameter log table.

Close: closes the window

Load Configuration: refresh and displays the list of parameters being logged

Logged parameters list-the parameters configuration table

Par: view or enter the Modbus address of the parameter to log

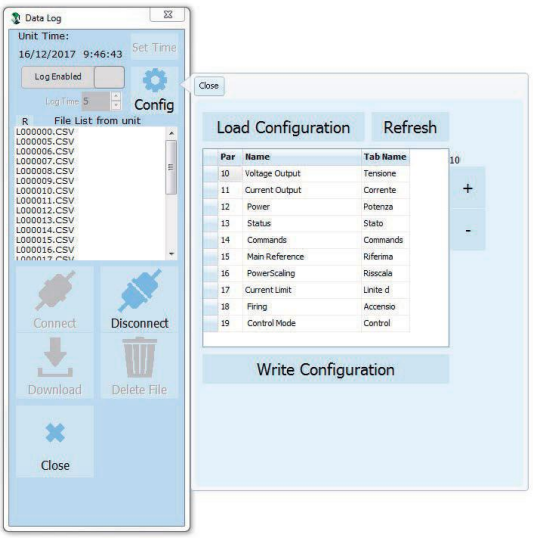

NOTE: is possible to set all parameter number describe in the Modbus communication manual

Name: view or choose by name of common parameter to log

Tab Name: indicates the name of the logged parameter as displayed in the log file

+ button: adds a row to the list

- button: removes the last row from the list

Write Configuration: sends the list of parameters to be logged to the controller

10.6.7 MSG view

Message view display the communication activity between the computer and the power controller.

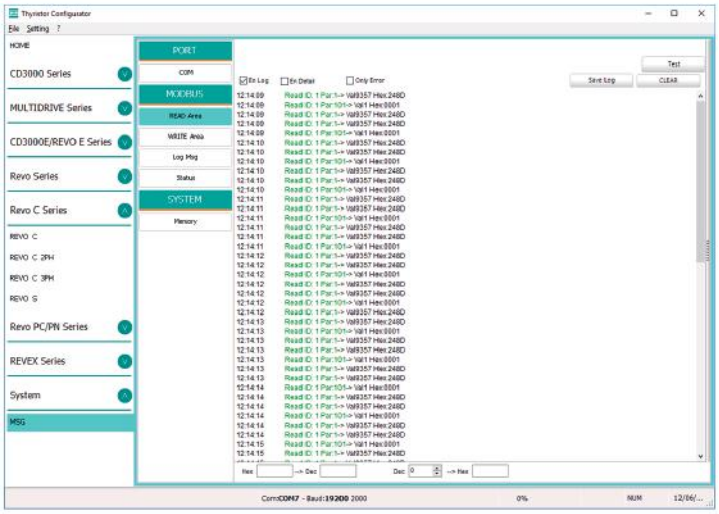

PORT

- COM: use this view to see when the COM port is accessed and its settings

MODBUS: Modbus communication protocol area

- READ Area: use this view to see parameters being polled
- READ Area -> En Log: enable a short read communication log activity
- READ Area -> En Detail: if En Log enabled enable a detailed read communication log activity
- READ Area -> Only Error: if En Log enabled enable a read communication log activity only if in error
- WRITE Area: use this view to see what parameters and the value are send power control
- READ Area -> En Log: enable a write communication log activity
- Log Msg: use this view to see the "Data Log" protocol detail when Data Log windows is active
- Status: view the status and settings of the COM port

SYSTEM

- Memory: view the memory usage of the Configurator program on the computer

10.6.8 Settings window

Use this window to choose user-settable options for the Configurator software.

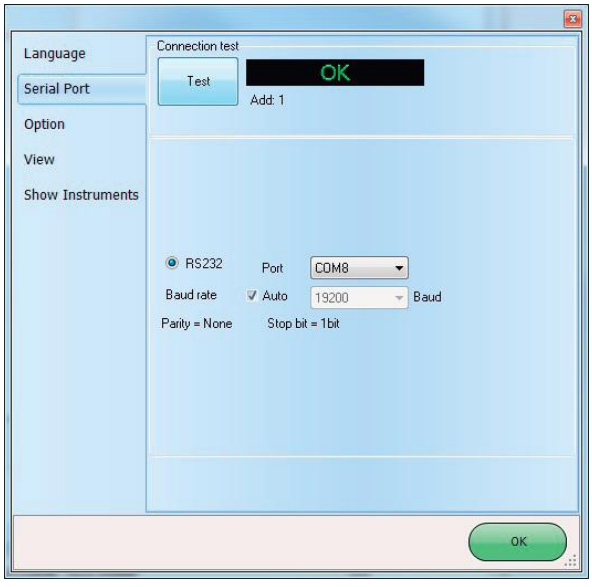

Language:

- Available Languages: choose the language used in the program

NOTE! to be active the language change, need close and open again the configuration software

Serial Port: Set the serial port parameter

- Test: click to test for communication with a power controller via the selected port
- Port: select the computer's COM port to use to communicate with power controllers
- Baud rate: select Auto to allow the Configurator to set the baud rate for the COM port or deselect the option to set the baud rate yourself

Options: Set the configurator options

- List Options: set whether or not parameter values are displayed in hexadecimal in simple view recipes
- Directory: set the directories in which recipes and images are saved
- Disable Check Type: set to allow communication with power controllers that are not precise matches for the supported types. Used only for special version. Note that set is not memorized after software shutdown

View:

- Hide Tool Bar: future use
- Hide Status Bar: select to hide the status bar that appears at the bottom of the program window
- Show Instruments: Hide or show the available instrument in the left side of main windows

10.7 Configurator access levels

The configurator has different levels of access, which can be selected by clicking on the "Actual level" tab.



At the login prompt enter the password for the required level

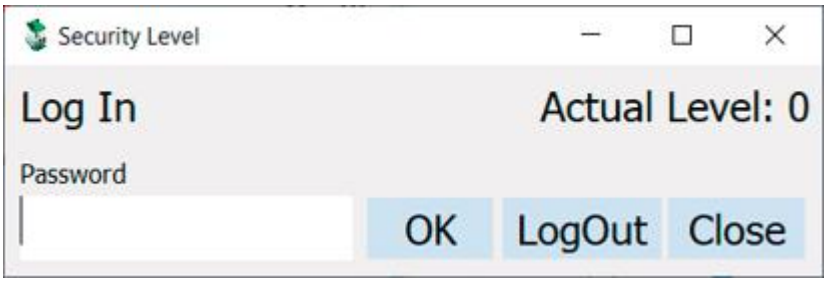

Available levels: 1, 4 (levels 2 and 3 are not provided)

Function	Level 0 (default)	Level 1 (Password: 1111)	Level 4 (Password: 1234)
Basic working and configuration parameters	✓	✓	✓
"Tune" button with standard parameters	✗	✓	✓
DI1 and DI2 configuration	✗	✓	✓
Input AI1 and AI2 configuration	✗	✓	✓
Edit Tune ➤ CT Correction	✗	✗	✓
Edit Tune ➤ Aux Voltage	✗	✗	✓
Edit Tune ➤ Nom. Voltage	✗	✗	✓
Tune button ➤ Input1 ➤ Calibration 0	✗	✗	✓
Tune button ➤ Input1 ➤ Calibration SPAN	✗	✗	✓
Tune button ➤ Input2 ➤ Calibration 0	✗	✗	✓
Tune button ➤ Input2 ➤ Calibration SPAN	✗	✗	✓

✓ = modifiable parameter, ✗ = non-modifiable parameter

11 Configurable Inputs and Outputs

The REVO C power controller features two digital inputs, up to two analog inputs and a relay output. Some models also include an analog output for retransmitting a measured value to other automation equipment. This section describes the various functions of these inputs and outputs and how they interact with other features of the power controller.

11.1 Digital Inputs

The REVO C power controller has two optically-isolated, digital inputs that can be connected to control panel switches or other automation equipment such as a temperature controller or programmable logic controller. Using Digital In 1 Function and Digital In 2 Function on the hardware menu each digital input can be configured to perform one of the following:

- **Enable:** the power output is off unless this signal is on. If both digital inputs are set to this option, the state of digital input 2 takes precedence (DI2 Default Configuration).
- **Voltage Feedback:** this signal overrides the feedback setting. When this signal is on, the control loop uses voltage feedback. When the signal is off, the loop reverts to the feedback parameter setting (DI1 default Configuration).
- **Local / Remote:** this signal selects how the set point is set. When this signal is on, the control loop's set point is set using the keypad or through communications. When this signal is off, the set point is set by the an analog input. When a digital input is set to this function, the Local/Remote (L/R) button on the front panel cannot be used to choose the source of the set point.
- **SP Analog In 1 / 2:** this signal chooses which of the two analog inputs is used as the source of the set point when the remote set point is in effect. When this signal is off, analog input 1 is the source of the remote set point. When the signal is on, analog input 2 is the source of the remote set point.
- **Logging:** this signal turns data logging on or off. When the signal is on, data is logged. When the signal is off, data is not logged. When this signal is on, it supersedes the setting of the Logging parameter on the advanced setup menu.
- **Fast Enable (SSR Input):** configuration used for SSR input (see figure in paragraph 8.3.1). This input configuration allows controlling the unit with a logic signal (ON / OFF) with voltage 4 ÷ 30Vdc 5mA Max (ON ≥4Vdc OFF <1Vdc) - 3HZ Max on time min. 100 ms.
- **Alarm Reset:** reset the Alarm relay Output if an alarm/s triggered. When this function is selected, and the digital input is on, the HB alarm resets. If the Digital Input is off and the problem persist, the alarm is reactivated.

To configure how the power controller uses these signals, see "Digital In 1 Function" and "Digital In 2 Function" on Paragraph **9.4.4 Hardware menu**.

11.2 Analog Input 1: Set Point

To control the power to the load with a device such as a temperature controller, connect the control signal to analog input 1.
This input accepts current, voltage and potentiometer signals. The signal is interpreted as set point by comparing the measured value to the input's full scale. For example, the set point is 50% when the analog input detects 5V and the input is configured to receive 0 to 10VdC.
Configure the power controller to recognize the signal with the hardware menu; see "Analog In 1" on Paragraph **9.4.4 Hardware menu**. For instructions for wiring see paragraph 8.3 Schematic.

11.3 Analog Input 2: Set Point or Feedback

What this input does is user-configurable. Connect an analog signal that indicates:

- An alternate set point signal
- Measured power, voltage or current from an external device used as feedback.

This input accepts current, voltage and potentiometer signals. The signal is interpreted by comparing its measured value to the input's full scale. For example, the signal is 50% when the analog input detects 12mADC and the input is configured to receive 4 to 20mADC.
Configure the power controller to recognize the signal and how the power controller uses it on the hardware menu; see "Analog In 2" on Paragraph **9.4.4 Hardware menu**. For instructions for wiring see paragraph 8.3 Schematic.

11.4 Alarms and Alarm Relay Output

When an alarm occurs and while the condition persists, the alarm relay is de-energized. The alarm relay is energized when power is supplied to the controller's electronics via the auxiliary power input and there are no alarms.
Choose which conditions determine the alarm relay output with the Alarm Function setting on Paragraph **9.4.4 Hardware menu**.

Alarm Function Options

	Alarm Output Energizes for...			
	Heater Break	**Shorted SCR**	**Communication Watchdog Error**	**Heat Sink Over Temperature**
None				X
Heater Break (HB)	X			X
SCR Short (SC)		X		X
HB / SC	X	X		X
Watchdog (WD)			X	X
WD / HB	X		X	X
WD / SC		X	X	X
WD / SC / HB	X	X	X	X



NOTE! The alarm relay output indicates an alarm whenever the temperature of the heat sink is too high even when Alarm Function on the hardware menu is set to None.



NOTE! The power controller monitors for heater break or short circuit conditions only when included in the option selected for Alarm Function.

12 Alarm description

12.1 Heater Break Alarm

This option allows you to diagnose any load breakage. The diagnostics is based on the comparison of the value of the nominal resistance of the load with respect to the resistance measured in real time. The nominal resistance is calculated using the **Operative Load Voltage** (**Nom Line V**) and **Nominal Current of the load** (**Nominal I**) parameters.

Nominal Resistance R=Nom Line V/Nominal I

The alarm threshold value is the value of the nominal resistance increased by the percentage defined by the HB Sense parameter

Example:
Resistance 2200W @ 220V
power/voltage= A --> 2200/220 = 10A
• nominal V: 220 V
• nominal I: 10A
• Nominal resistance - R = 22 Ohm
HB sense parameter = 20% --> threshold value = 22 + (22 x 20 / 100) = 22+4,4 Ohm = 26,4 Ohm

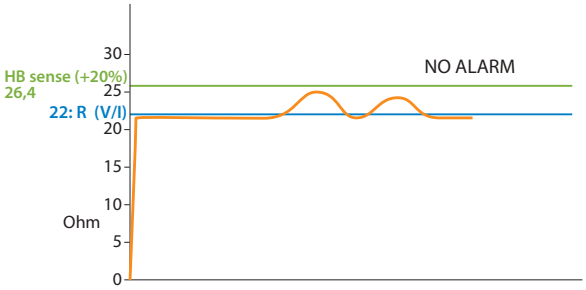

The alarm activates when the detected Runtime resistance exceeds the value of 26.4 Ohm.

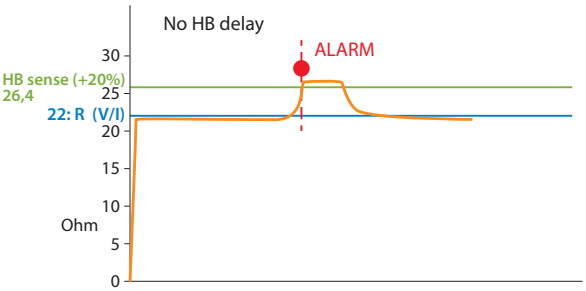

Using the HB Delay parameter, the alarm intervention can be delayed.

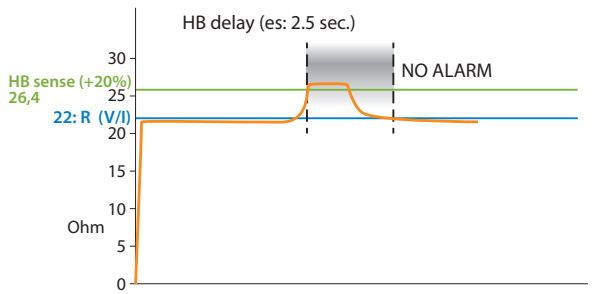

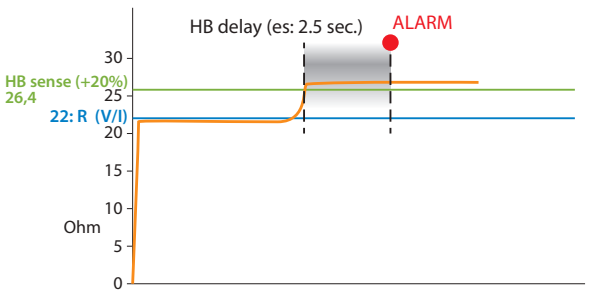

Sensitivity (HB sense) and delay (HB delay) can be varied according to the application (see parameters on page 37).

12.2. AUX High

This alarm is displayed when the auxiliary supply voltage exceeds the established ranges. If the alarm situation persists for more than 5 seconds, the unit will go into protection.

12.3 AUX Low

This alarm is displayed when the auxiliary supply voltage is lower than the established ranges.
This alarm condition could lead to incorrect unit operation.

12.4 ComError

If the communication watchdog function is enabled (watchdog ON) this alarm is activated when there is no data passage within the time established by the "WD reset" parameter.

12.5 AUX Line Loss

This alarm is activated when there is no auxiliary voltage.

12.6 SD Error

When the Logging option is present, this alarm is activated when a writing error is found in the SD memory.

12.7 SHRT

This alarm is activated if the unit detects a short circuit in one of the power devices. This alarm could also activate when the current measured by the unit is greater than 80% of the value set in Nominal I.

12.8 SCR Temp

This alarm is activated when the heat sink temperature exceeds the set threshold value (80°C).

12.9 Line Loss

This alarm is activated when L1 and L2 are not detected.

13 "Enable" Function in static Unit

The "Enable" function can work in several ways

- from Digital input
- from Serial Port
- from Digital Input + Serial Port
- from FieldBus
- from Digital Input + FieldBus

To simplify in the various diagrams, the "enable" command from serial port will be represented by a "Software contact" abbreviated as Sw_S, and the command from digital input is abbreviated as Sw_H.

13.1 Using Digital Input only

By setting the Digital Input as "Enable" it is possible to control the enable from Digital Input.
By closing the digital input via Sw_H contact, the unit will be enabled and by opening the digital input the unit will be disabled.
The status can be read on bit 2 of parameter 14 on the serial port.
If bit 2 = 1: Enabled
If bit 2 = 0: Disabled

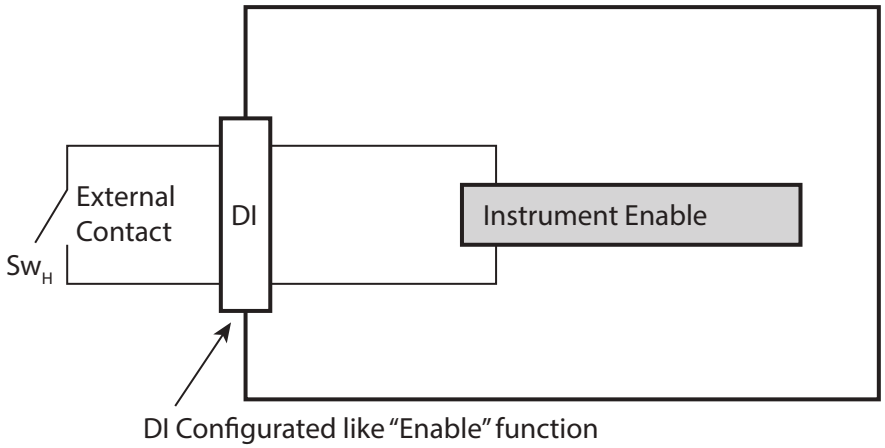

Sw_H = Switch hardware

13.2 Using Serial Port RS485 only

The static unit has an RS485 Modbus RTU serial port always present.
By setting the Digital Input as "Not Used" or different from "Enable" it is possible to control the enable from serial port with bit 2 of parameter 14
If bit 2 = 1: Enabled
If bit 2 = 0: Disabled

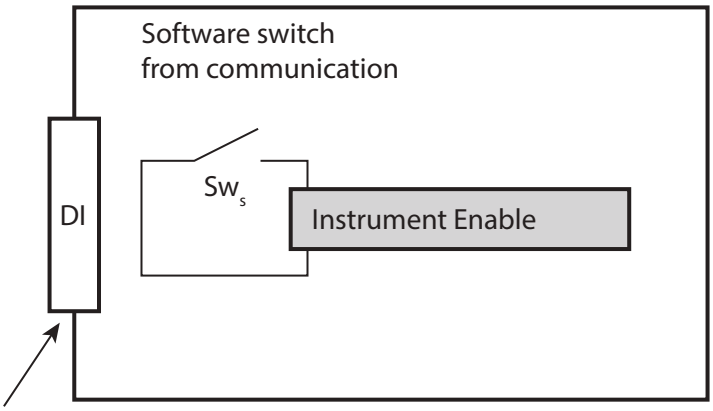

DI Function Configurated like "Not Used" or different from "Enable"

Sw_S = Switch software

13.3 Using Digital Input + Serial Port RS485

The static unit has the serial port as standard RS485 Modbus RTU always present.
The external contact Sw_H and the internal software contact Sw_S are connected in series, therefore if you want to enable the static unit, both contacts must be enabled.
Each variation of the Sw_H contact connected on the digital Input (DI) is shown on the internal Sw_S contact, allowing correct operation.
Using the serial port it is possible to change the status of the Sw_S contact with bit 2 of parameter 14, bearing in mind that it will be overwritten when the digital input is subsequently changed.
This configuration is useful for having an external contact for a safety or emergency alternative to the serial command.

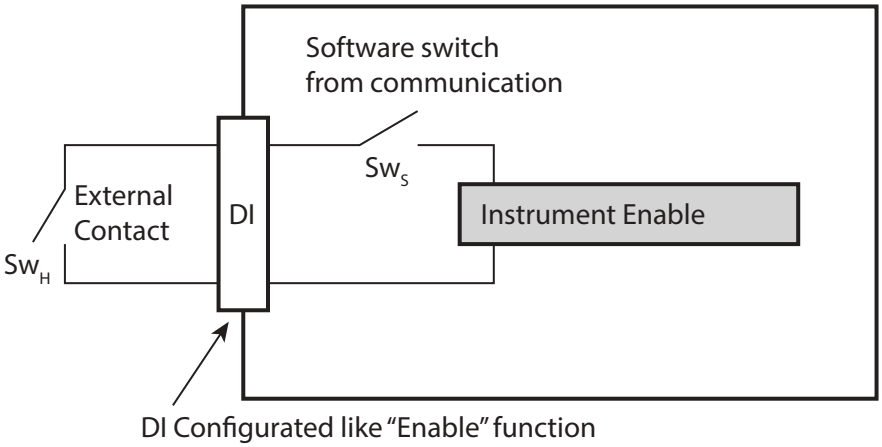

DI Configurated like "Enable" function

Sw_H = Switch hardware Sw_S = Switch software

13.4 Using FieldBus only

The static unit as an option can be ordered with a FieldBus (Ex: profinet).
This option continuously writes the values on the unit keeping them up to date.
Using the field bus it is possible to change the status of the Sw_S contact with bit 2 of the "Command table" (See the communication manual of the respective FieldBus).

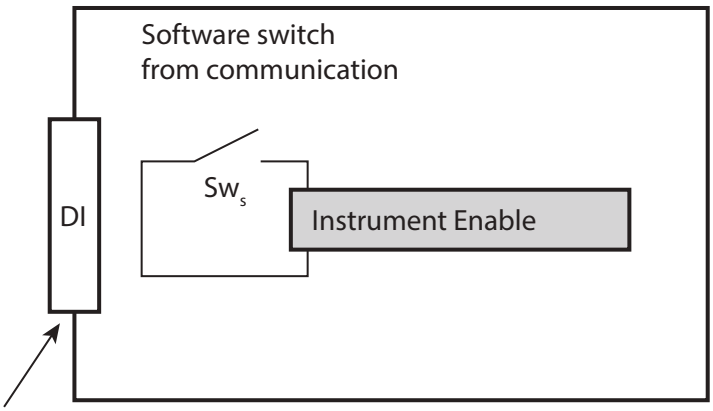

DI Function Configurated like "Not Used" or different from "Enable"

Sw_s = Switch software

NOTE:
The parameters written are:
- command table
- reference
- rescaling

if the FieldBus is active but disconnected these values will be forced to 0.

13.5 Using Digital Input + FieldBus

The static unit as an option can be ordered with a FieldBus (Ex: profinet).
This option continuously writes the values on the unit keeping them up to date.
The external contact Sw_H and the internal software contact Sw_S are connected in series, therefore if you want to enable the static unit, both contacts must be enabled.
Using the FieldBus it is possible to change the status of the Sw_S contact with bit 2 of the "Command table" (See the communication manual of the respective FieldBus), bearing in mind that the Sw_H contact must also be closed to enable it.
This configuration is useful for having an external contact for a safety or emergency alternative to the FieldBus.

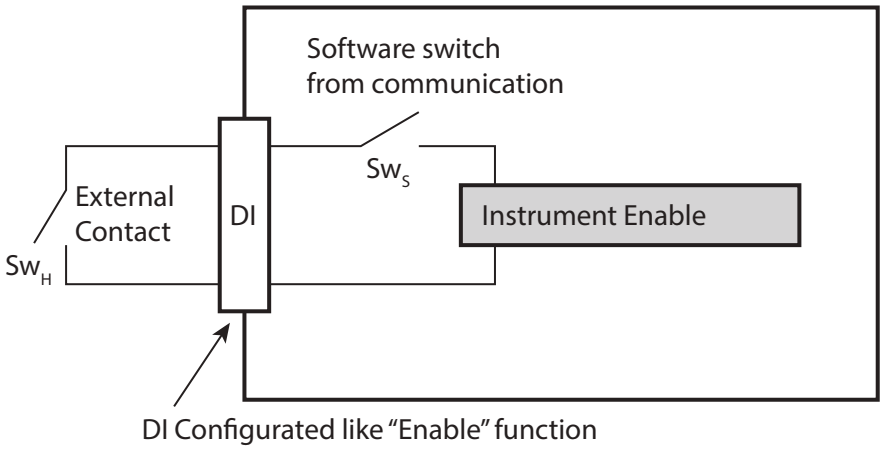

Sw_H = Switch hardware Sw_S = Switch software

NOTE:
The parameters written are:
- command table
- reference
- rescaling

if the FieldBus is active but disconnected these values will be forced to 0.

14 Firing type

Choose a correct firing type allows to optimize the thyristor unit for the installed load.
The firing type has already configured in line with customer requirements that are defined in the Order Code.
The Order Code is written on the identification label.
However, if you wish to change the firing type you can use the software configurator or the Control Panel.

Caution: this procedure must be performed only by qualified persons.

14.1 Zero Crossing

ZC firing mode is used with Logic Output from temperature controllers and the Thyristor operates like a contactor.
The Cycle time is performed by temperature controller. ZC minimizes interferences because the Thyristor unit switches ON-OFF at zero voltage.

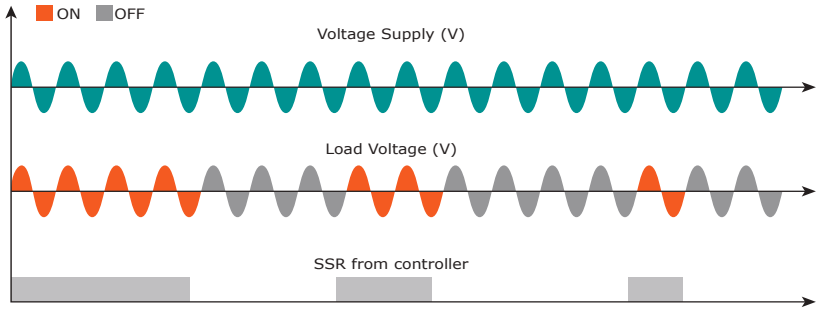

14.2 Burst Firing

The Burst Firing is similar to the Single Cycle, but consecutive cycles ON are selectable between 1 and 255, with input signal equal at 50%. When is specified 1 the firing type is Single Cycle.
Burst Firing is a method zero crossing that it reduces the electromagnetic interferences because the thyristor switches at zero voltage crossing.
The example show the Burst Firing with Burst cycles=4.

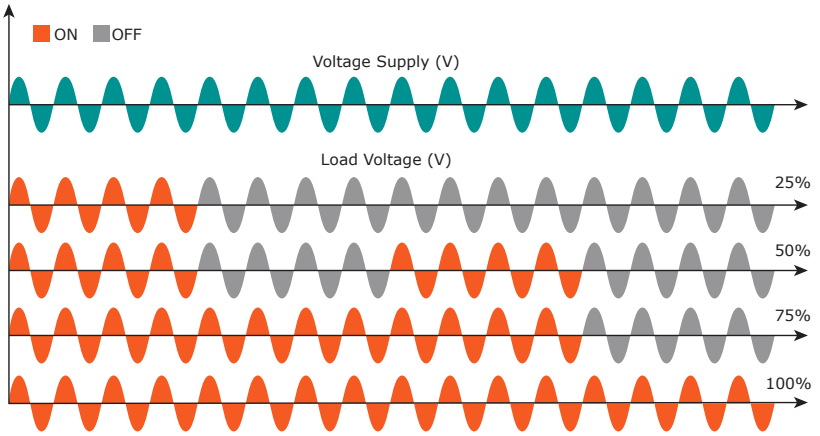

15 Control Mode (feed-back)

The Control Mode (feed-back) type has already configured in line with customer requirements that are defined in the Order Code. The Order Code is written on the identification label.
However, if you wish to change the Control Mode (feed-back) type you can use the software configurator or the Control Panel.

Caution: this procedure must be performed only by qualified persons.

The Control Mode (feed-back) type is defined by the parameter Control Mode (feed-back) in setup menu.
If the configurable digital input has set like feed-back Selection, it's possible to change the select feed-back with the Voltage feed-back (V) simply activating the input.
It's possible to have:



V2 = Square Voltage feed-back.

The input signal is proportional to the output square voltage. This means that input signal becomes a power demand. The power remains constant if the load impedance doesn't change.



V = Voltage feed-back.

The input signal is proportional to the output voltage. This means that input signal becomes a voltage demand. This control mode compensates the voltage fluctuation of the incoming line supply.



I = Current feed-back.

The input signal is proportional to the current output. This means that input signal becomes a current demand. This control mode maintain the current also if the load impedance changes.



P(VxI) = Power feed-back.

The input signal is proportional to the power output. This means that input signal becomes a power demand. The power remains constant also if voltage and load impedance change. This control mode is used with silicon carbide elements that change its resistive value with temperature and with age. In addition it compensates the voltage fluctuation of the incoming line supply.



I2 = Square Current feed-back.

The input signal is proportional to the output square current. This kind of feed-back is suggested for cold resistance applications.


None = No feed-back Open Loop. The input is proportional to the firing angle (α).



External = External feed-back (0÷10V, 4÷20mA, 0÷20mA).

The input signal is proportional to an external signal. This means that input signal becomes a demand to maintain this signal always constant. This control mode is used for example with galvanic systems, where it's necessary to control the current value through the electrodes.

16 Electronic boards

16.1 How to access







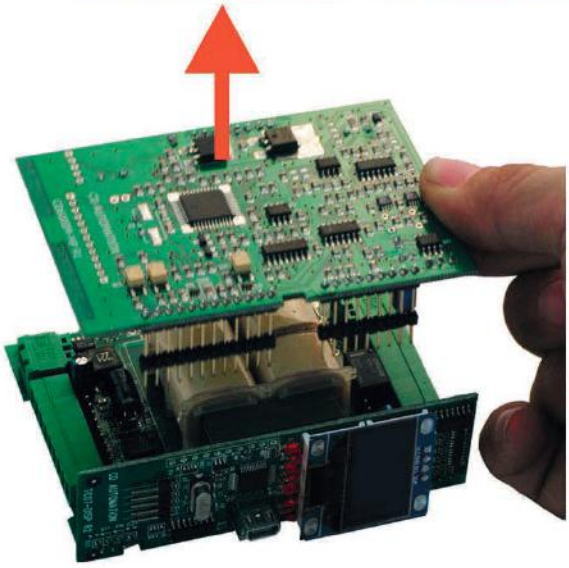

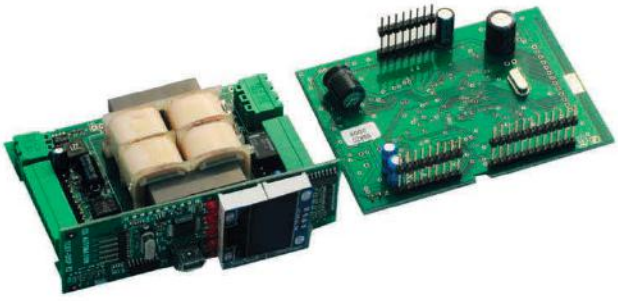

16.2 Supply the Electronic Board

The REVO C thyristor unit, to work, requires a voltage supply for the electronic boards. The Max consumption is 10VA.
The voltage supply for the electronic boards is configured in line with customer requirements that are defined in the Order Code. The Order Code is written on the identification label.

- **Warning:** Before connecting or disconnecting the unit check that power and control cables are isolated from voltage sources.
- **Specialised personnel only**

Terminal M4	Description
1	Voltage Supply for Electronic Boards (Auxiliary Voltage)
2	Not Used
3	Voltage Supply for Electronic Boards (Auxiliary Voltage)

If it is necessary to change the value of the auxiliary supply voltage, move the jumpers as shown in the table below.
The range of the auxiliary voltage that can be set depends on the transformer mounted on the board, see the ordering code on Digit 8 (see table).

Order Code	As ordered		Change to	
	Jumper JP1 + JP2 are linked		Link only Jumper JP3	
	Transformer range	Line voltage	Transformer range	Line voltage
RC2_ _ _-_1	90:135V	100/120V	180:265V	200/208/220/230/240V
RC2_ _ _-_2	180:265V	200/208/220/230/240V	342:528V	380/400/415/440/480V
RC2_ _ _-_3	238:330V	277V	540:759V	600/690V
	Only Jumper 3 is linked		Link Jumper JP1 + JP2	
RC2_ _ _-_5	342:528V	380/400/415/440/480V	180:265V	200/208/220/230/240V
RC2_ _ _-_6	540:759V	600V	238:330V	277V
RC2_ _ _-_7	540:759V	690V	238:330V	277V

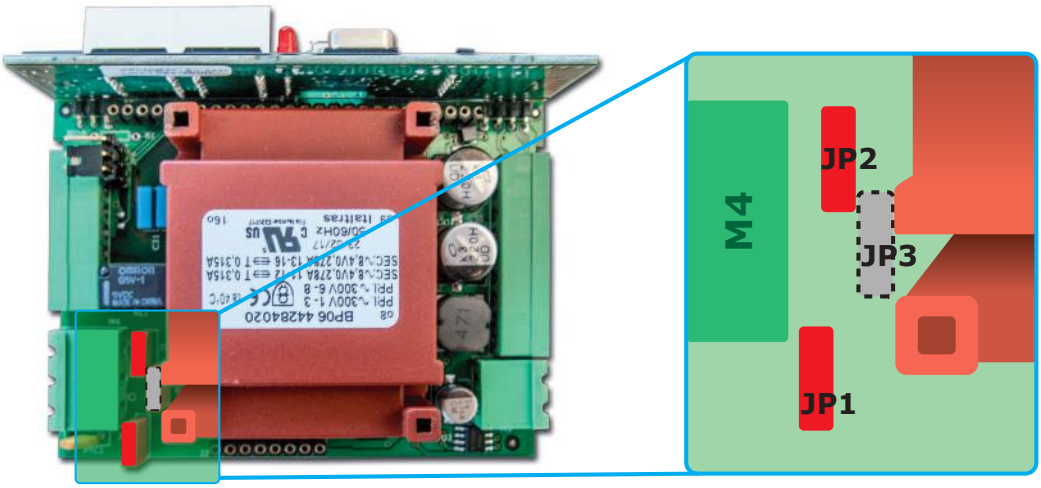

- **Attention! never link all the jumpers JP1+JP2+JP3 at the same time or JP3 + any other jumper, JP3 must be always alone, follow only the configuration shown.**
- **Once the position of the jumpers has been changed, write the correct value in Par P43 (see next page).**
- **Attention! The auxiliary voltage is also used for firing synchronism, so it must be in phase with the load voltage.**

Sequence for writing the Aux Voltage value:

Click on 'Actual Level' and enter the password '1234' to access level 4.

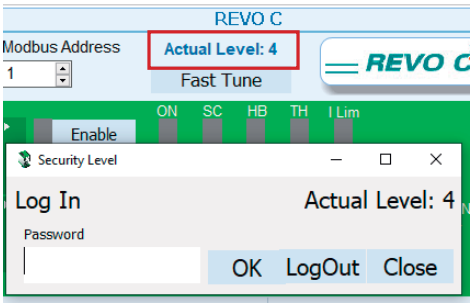

Click on the 'Fast Tune' button

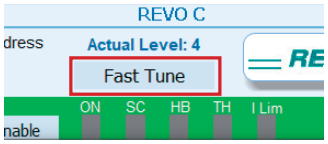

Enter the voltage value in the 'AuxVoltage' field,

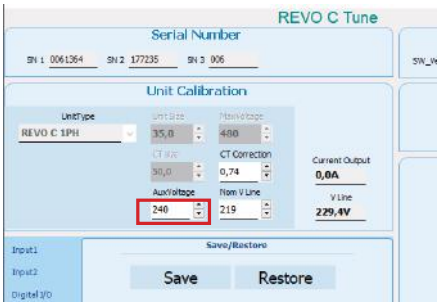

17 24Vdc input Auxiliary supplemental power

The 24Vdc Auxiliary Supply input in Terminal Block M6, terminals 17 and 18, can be used as an auxiliary power supply when the main network fails. This auxiliary power supply keeps the communication circuits powered allowing data to be transferred to the supervision system.

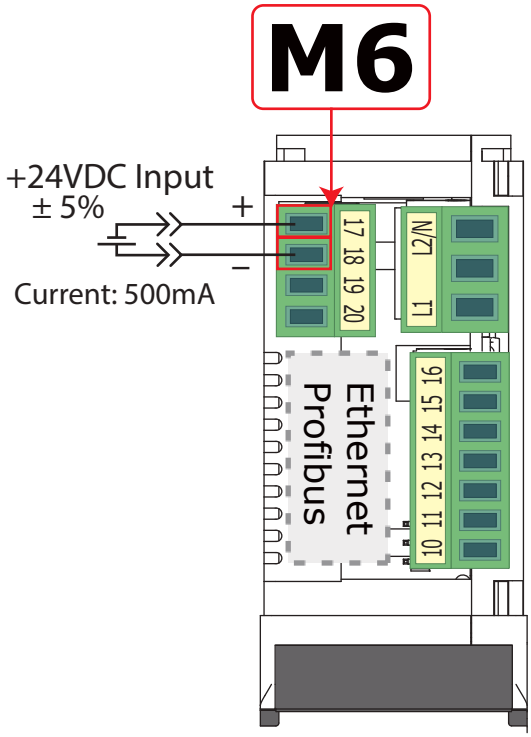

18 RS485 Serial port

M3 Terminal	Description
A+	RS485 A+
B-	RS485 B-

The serial communication port RS485 is available on the Command Terminals.
On this port may be done a network up to 127 REVO C.

Down

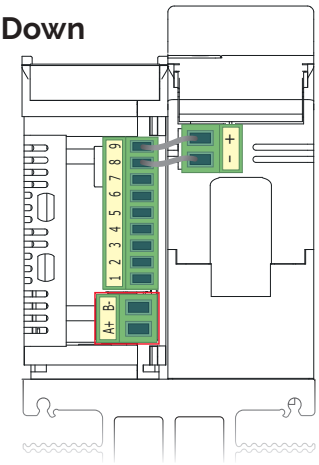

19 Fieldbus communication option

Other serial communication port are available as option, see Communication Manual for details.

Profibus Configuration Connectors

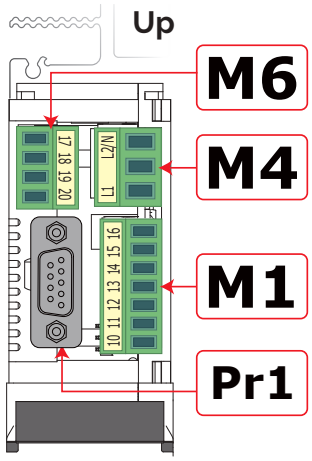

Ethernet Configuration Connectors

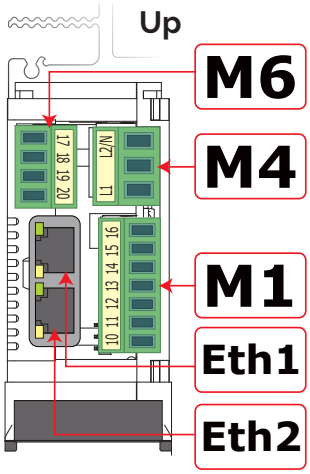

Second Serial 485 Configuration Connectors

Down

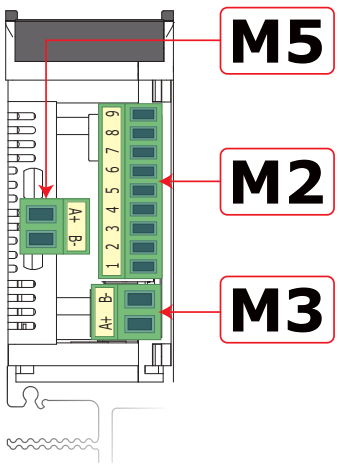

M5 Terminal	Description
A+	RS485 A+
B-	RS485 B-

Caution: If Bus port is not connected or in error, all writable parameters are set to 0 value

20 Internal Fuse

The thyristor unit have internal fuse extrarapid at low I^2T for the thyristor protection of against the short-circuits. The Fuses must have I^2T 20% less than thyristor's I^2T. The warranty of thyristor is null if no proper fuses are used.

Type	Fuse Code Spare Part	Total Current (A_{RMS})	I^2T at 500Vac* (A^2 sec.)	Vac	Max Power Lost (W)	Quantity for each phase
030	FU1451/40A	40	525	660	8	1
035	FU1451/50A	50	1260	660	9	1
040	FU1451/50A	50	1260	660	9	1

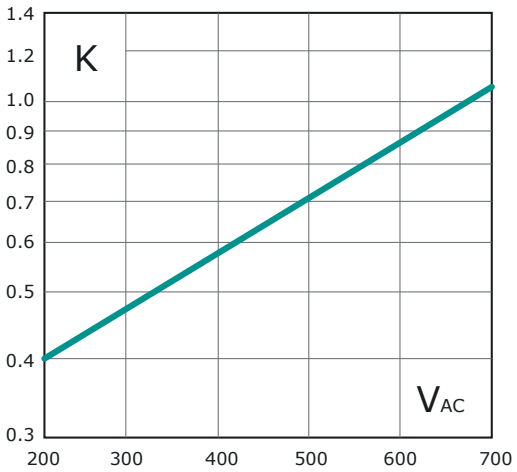

*I^2T are multiplied for K value in function of Vac:
at 500V K is equal to 0,7 (750 X 0,7 = 525 1800 X 0,7 =1260)
at 660Vac K is equal to 1.

Caution: High speed fuses are used only for the thyristor protection and can not be used to protect the installation.

Caution: The warranty of thyristor is null if no proper fuses are used. See tab.

Warning: When it is supply, the Thyristor unit is subject to dangerous voltage, don't open the Fuse-holder module and don't touch the electric equipments.

20.1 Fuses Replacement

Open the Fuse-Holder and pull out the fuses

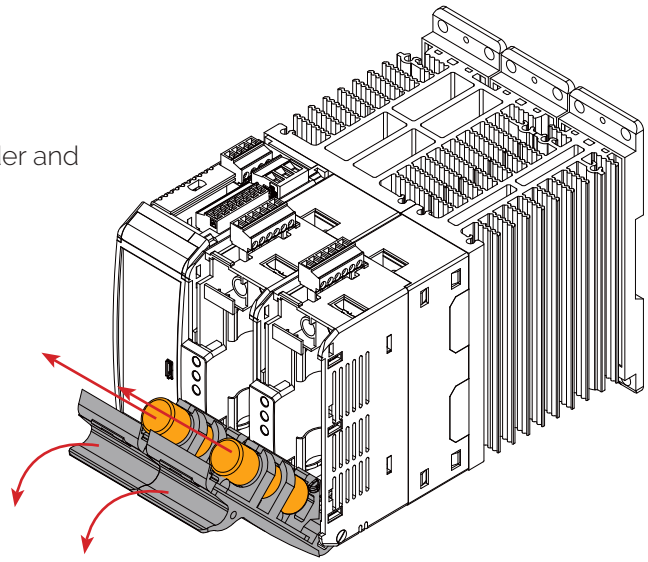

CD Automation S.r.l.
Via Picasso, 34/36 - 20025 Legnano (MI)- Italy
Tel. +39 0331 577479 - Fax +39 0331 579479
E-mail: info@cdautomation.com - Web: www.cdautomation.com