IBC control
www.ibccontrol.se
+46 42 33 00 10

F22180210
Motor IE2 180/200
3x230/400 V, 50 Hz
Worm gear motor

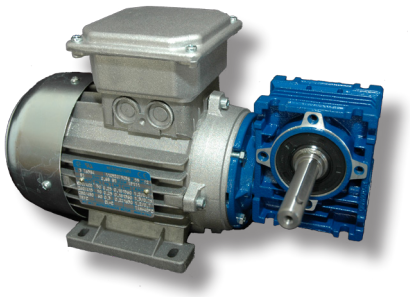

- Adapted for variable speed control
- Aluminium coating for better thermal dissipation
- Built-in thermal contact, drawn to terminal
- Compact built-in dimensions according to IEC-standards
- Extended output shaft
- Two years product warranty

Technical data at 50 Hz		180/200
Rated efficiency at % *)	100 %	64,7
	75 %	62
	50 %	57
Efficiency class		IE2
Poles		4
Rated output		180 W
Rated current 230/400 V		1,2/0,7 A
Connection voltage **)		3x230/400 V
Rated speed output gear		200 rpm
Ambient temperature		-15 - +40 °C
Maximum operating temperature		<+40 °C
Rate torque output gear		6,0 Nm
Gear ratio		1:7
Protection form		IP55
Weight		5,2 kg
Max rotor diameter at rotor speed 12 rpm		2500 mm

*) Rated efficiency at % of rated load and voltage,
determined based on the 50 Hz operation and 25 °C ambient reference temperature.

**) When run with our control units, the motor must be D-connected (3x230 V)

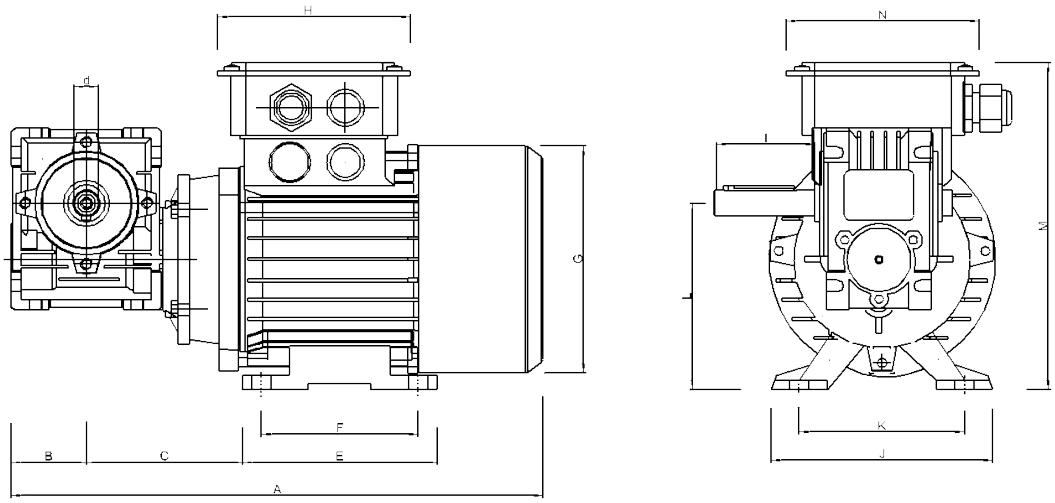

MOTOR	A	B	C	d	E	F	G	H	I	J	K	L	M	N
180/200	286	40	85	14	105	80	123	101	61	120	100	93	165	101

Connection

Connection motor				Thermal contact
Control unit, terminal	U	V	W	T-T alt. 7-8
Cable number	1	2	3	4-5
Motor, terminal	U1	V1	W1	See picture

Connection thermal contact

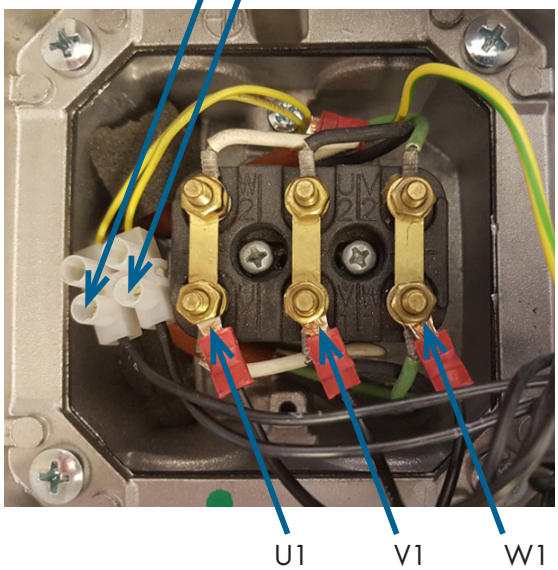

Direction of rotation is changed by switching two of the phases.