B-56L

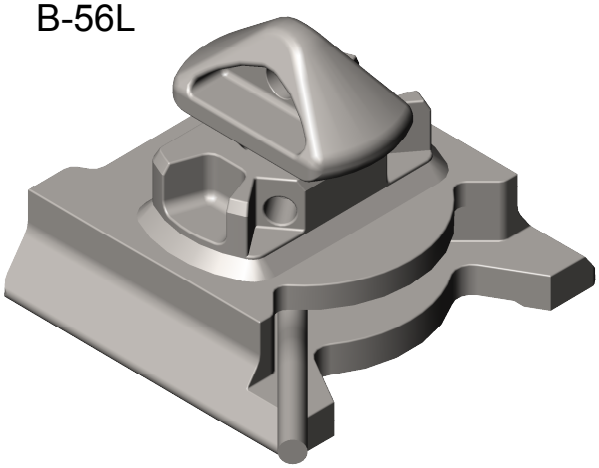

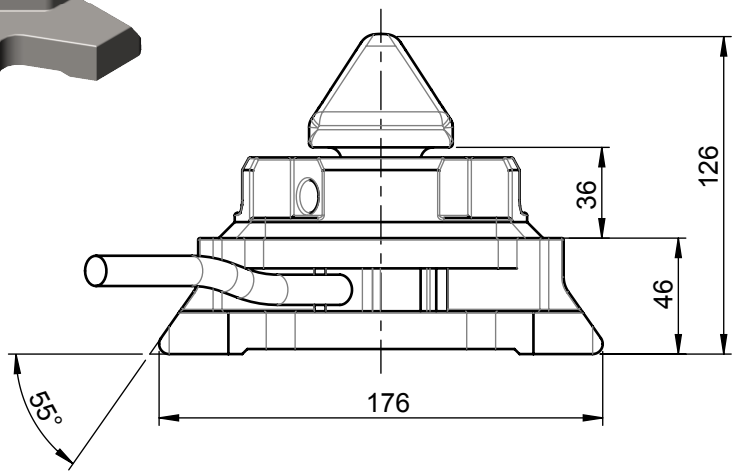

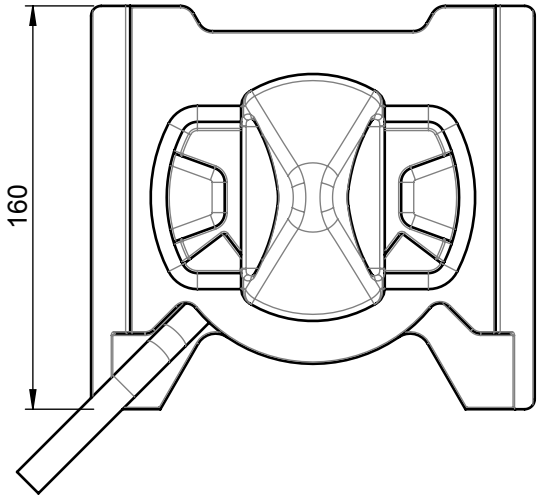

Position of B-56L handle
when locked

Mod.	Date	Check	Description
i	28/12/17	DDC	Update: new address added to drawing
h	12/06/13	SB	General update

Scale 1:3

Strength (kN):

	Tension	Shear	Compr.
MSL	245	210	
PL	313	263	
BL	490	420	

Weight 6.75 kg

Material Steel

Finish Galvanised

Drawing Size A4

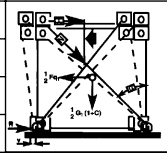

CONTAINER TECHNICS N.V.
Simon De Heuvellaan 3 ~ B-2110 WIJNEGEM
tel: +32.3.546.41.00 - fax: +32.3.541.18.01
mailto: info@contech.be
www.containertechnics.com

Description
U-frame twistlock (transversal)

Project

Drawn	Check		Reference no.	Page	Mod.
MS 02/11/05	TVP 24/06/13		B-56	1	i