TRILLIUM
FLOW TECHNOLOGIES™

SARASIN-RSBD™

Portable Spring Loaded Safety Relief Valves

Series 9

QUALITY ASSURANCE

Trillium operates quality programmes to cover the full scope of their activities. Comprehensive quality systems have been developed to serve the power, oil and gas and industrial markets which they serve.

The company holds approvals to or complies with:

- ASME Section III 'N', 'NPT', 'NV'
- ASME Section I 'V'
- ASME Section VIII 'UV'
- ISO 9001:2015
- ISO 14001:2015
- ISO 45001:2018
- API Q1 TO API LICENCES API 6D (6D-0182) AND API 6A (6A-0445)
- API STD 520
- API STD 526
- API STD 527
- API STD 2000
- ISO 4126

The Quality systems have been approved for the supply of products to meet the requirements of the Pressure Equipment Directive (PED) and compliance modules A, D1, H, B&D have been applied in categories I through IV respectively.

The company is committed to compliance with legislation and has an established environment and health and safety policy.

An ongoing commitment to customer care is met through the process of continuous improvement and the further development of our systems and processes towards meeting ISO 9001:2008.

SARASIN-RSBD™

The Sarasin-RSBD™ range of products is manufactured in accordance with ASME, API and ISO standards and therefore can meet most of worldwide customers requirements. The company holds approvals or complies with:

- ISO 9001:2015
- ISO 14001:2015
- ISO 45001:2018
- PED 2014/68/UE (Module B+D Category IV)
- ATEX 94/9/EC
- ASME Section I 'V' - ASME Section VIII 'UV'
- API STD 520 - API STD 526 - API STD 527
- API STD 2000
- ISO 4126
- SELO TS (Chinese conformity)
- EAC TR CU 010/012/032 (Eurasian conformity)
- CRN (Canadian conformity)

Specifically, Trillium can design and manufacture special valves to meet special customer requirements.

6A-0445
6D-0182

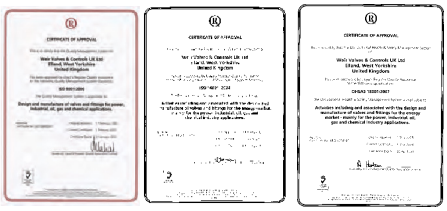

ATWOOD & MORRILL™
Engineered Isolation & check valves

BATLEY VALVE®
High Performance Buttery Valves

BDK™
Industrial Valves

BLAKEBOROUGH®
Control & Severe Service Valves

HOPKINSONS®
Parallel Slide Gate & Globe Valves

MAC VALVE®
Ball & Rotary Gate Valves

SARASIN-RSBD™
Pressure Safety Devices

SEBIM™
Nuclear Valves

TRICENTRIC®
Triple Offset Buttery Valves

Portfolio of engineered service solutions and aftermarket support

TRILLIUM FLOW TECHNOLOGIES™

Trillium provides critical service and safety valves, specialist pumps and service support to flow control and rotating equipment. Our world-wide reputation is based on engineering excellence applied to a comprehensive range of specialist products and effective customer support.

We have the capability to deliver complete valve solutions for major projects in the power generation, oil and gas exploration and general industrial sectors. Our global network of service operations specialise in the maintenance, upgrade and management of power and industrial assets at customer sites.

Trillium manufactures the Sarasin-RSBD range of pressure safety valves and safety devices for oil and gas, petrochemical and chemical industries, pipelines, thermal and nuclear power plants, sugar refineries and pulp mills.

VALVE TESTING

All pressure containing items are hydrostatically tested, seat leakage tested and functionally tested.
We can also perform gas, packing emission, cryogenic and advanced functional testing, as well as seismic testing for nuclear applications.

MATERIAL TESTING

- Non-destructive examination by radiography, ultrasonics, magnetic particle and liquid penetrant.
- Chemical analysis by computer controlled direct reading emission spectrometer.
- Mechanical testing for tensile properties at ambient and elevated temperatures, bend and hardness testing. Charpy testing at ambient, elevated and sub-zero temperatures.

CONTENTS

Introduction	4
Dimensions	5
Materials	7
Accessories	10
Codifications	12
Applications	13

The 9 Series valves are designed and manufactured in compliance with American and European standards (ASME B&PVC Section VIII Division 1, EN ISO 4126 Part 1).

The 9 Series comply with most overpressure protection requirements in the following industries: oil & gas, petrochemical, chemical and many other general industries.

General

- Full lift
- Full Nozzle
- Adjustable blowdown
- Use on Gas, Liquids, Steam
- Size: 1⁄2" to 1" 1⁄2
- Set pressure up to 431 barg [6251 psig]
- Temperature : -196°C to +454°C [-320°F to +849°F]

Connections

- Screwed
  - Inlet: NPT male (female on request)
    BSP male
  - Outlet: NPT female
    BSP cylindrical female
- Flanged
  - Inlet: Loose captive flange or Integral Flange
  - Outlet: Screwed or flange
  - Type: ASME B16.5, EN 1759-1, EN 1092-1, Other standard on request

Concept

- Adjusting ring for perfect popping and blowdown adjustment
- Metal/metal seating

Construction

- Body: Carbon steel (SA 216 Gr WCC)
  Stainless steel (SA 351 Gr CF3M)
  Exotic material
- Trims: Stainless steel
  Exotic material

Options

- Packed lifting lever
- Test gag
- Bellows (metal seat - D & F orifices)
- Soft seat
- Balanced Piston (soft seat)

Elastomer materials (typical examples)

- NBR (Nitrile rubber, buna N) [-45°C to 93°C]
- HNBR (Hydrogenated nitrile rubber) [-45°C to 150°C]
- EPM (Ethylene propylene, EPDM) [-45°C to 120°C]
- Silicone VMQ/MVQ [-40°C to 120°C]
- Fluoro-silicone (FVMQ) [-40°C to 200°C]
- Fluorocarbone FKM (Viton) [-17°C to 204°C]
- Perfluoroelastomer FFKM (Kalrez) [-17°C to 260°C]
- Plastics – PTFE (Teflon) [-196°C to 260°C]
- PEEK…

End-user has to respect pressure/temperature limits and compatibility with process using soft seat

Orifices & Dimensions

NB Certified Flow Coefficient

Gas: 0.823
Liquid: 0.632

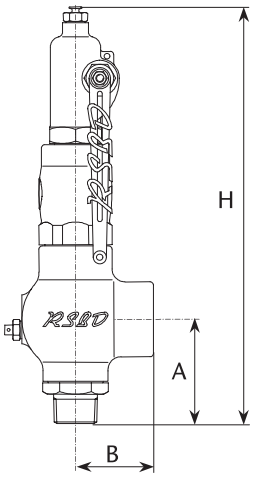

Screwed															
Orifice	Inlet Size	Outlet Size	Max Inlet Pressure		Max Outlet Pressure		Dimensions								
							A		B		C		Weight		
			barg	psig	barg	psig	mm	in	mm	in	mm	in	Kg	lb	
B actual area: 0.283 cm²/0.044 in²	1/2"	1/2"	155.2	2250	51.7	750	43.5	1.71	40	1.57	242	9.53	1.8	3.97	
	1/2"	1"	155.2	2250	20	290	47.5	1.87	40	1.57	242	9.53	1.8	3.97	
	1/2"	1"	431	6250	51.7	750	63	2.48	85	3.35	344	13.54	6.5	14.33	
	3/4"	1"	155.2	2250	20	290	50.5	1.99	40	1.57	245	9.65	1.8	3.97	
	3/4"	1"	421	6250	51.7	750	63	2.48	85	3.35	344	13.54	6.5	14.33	
	1"	1"	155.2	2250	20	290	50.5	1.99	40	1.57	245	9.65	2	4.41	
	1"	1"	431	6250	51.7	750	69	2.72	85	3.35	350	13.78	6.7	14.77	
D actual area: 0.801cm²/0.124 in²	3/4"	1"	103.4	1500	20	290	64	2.52	50	1.97	255	10.04	2	4.41	
	1/2"	1"	258.6	3750	51.7	750	63	2.48	85	3.35	344	13.54	6.5	14.33	
	1"	1"	103.4	1500	20	290	70	2.76	50	1.97	262	10.31	2.2	4.85	
	1"	1"	258.6	3750	51.7	750	69	2.72	85	3.35	350	13.78	6.7	14.77	
E actual area: 1.431 cm²/0.222 in²	3/4"	1"	51.7	750	20	290	64	2.52	50	1.97	255	10.04	2	4.41	
	3/4"	1"	155.2	2250	51.7	750	63	2.48	85	3.35	344	13.54	6.5	14.33	
	1"	1"	51.7	750	20	290	70	2.76	50	1.97	262	10.31	2.2	4.85	
	1"	1"	155.2	2250	51.7	750	69	2.72	85	3.35	350	13.78	6.7	14.77	
F actual area: 2.270 cm²/0.352 in²	1"	1"1/2	51.7	750	20	290	91	3.58	60	2.36	325	12.80	4.3	9.48	
	1"1/2	1"1/2	51.7	750	20	290	91	3.58	60	2.36	325	12.80	4.3	9.48	
G actual area: 3.664 cm²/0.568 in²	1"	1"1/2	20	290	20	290	91	3.58	60	2.36	325	12.80	4.5	9.92	
	1"1/2	1"1/2	20	290	20	290	91	3.58	60	2.36	325	12.80	4.5	9.92	

Orifices & Dimensions

NB Certified Flow Coefficient

Gas: 0.823
Liquid: 0.632

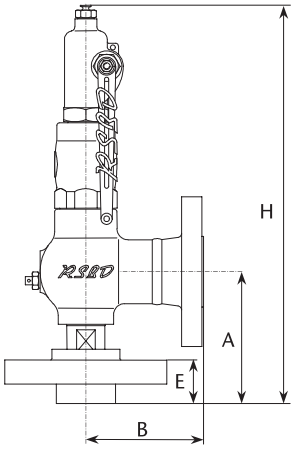

Flanged																				
Orifice	Inlet size	Outlet size	max Inlet pressure			max Outlet pressure			Dimensions								Weight	
			Max Set Pressure		Class	Max Set Pressure		Class	A		B		E		C			
			barg	psig	ASME	barg	psig	ASME	mm	in	mm	in	mm	in	mm	in	kg	lb
B actual area: 0.283 cm²/0.044 in²	1/2"	1"	19.7	285	150	19.7	285	150	90	3.54	85	3.35	26.8	1.06	285	11.22	3.6	7.94
	1/2"	1"	51	740	300	19.7	285	150	90	3.54	85	3.35	29.8	1.17	285	11.22	4	8.82
	1/2"	1"	102.1	1480	600	19.7	285	150	90	3.54	85	3.35	29.8	1.17	285	11.22	4	8.82
	1/2"	1"	153.1	2220	900	51	740	300	90	3.54	90	3.54	38.5	1.52	285	11.22	6	13.23
	1/2"	1"	255.5	3705	1500	51	740	300	115	4.53	120	4.72	38.5	1.52	400	15.75	10.2	22.49
	1/2"	1"	425.5	6170	2500	51	740	300	115	4.53	120	4.72	45.8	1.80	400	15.75	11.5	25.35
	3/4"	1"	19.7	285	150	19.7	285	150	90	3.54	85	3.35	28.3	1.11	285	11.22	40	88.18
	3/4"	1"	51	740	300	19.7	285	150	90	3.54	85	3.35	31.3	1.23	285	11.22	4.5	9.92
	3/4"	1"	102.1	1480	600	19.7	285	150	90	3.54	85	3.35	31.3	1.23	285	11.22	4.5	9.92
	3/4"	1"	153.1	2220	900	51	740	300	105	4.13	90	3.54	41	1.61	300	11.81	6.6	14.55
	3/4"	1"	255.5	3705	1500	51	740	300	115	4.53	120	4.72	41	1.61	400	15.75	11	24.25
	3/4"	1"	425.5	6170	2500	51	740	300	115	4.53	120	4.72	47.4	1.87	400	15.75	12.1	26.68
	1"	1"	19.7	285	150	19.7	285	150	90	3.54	85	3.35	29.9	1.18	285	11.22	4.4	9.70
	1"	1"	51	740	300	19.7	285	150	90	3.54	85	3.35	33.1	1.30	285	11.22	5	11.02
	1"	1"	102.1	1480	600	19.7	285	150	90	3.54	85	3.35	33.1	1.30	285	11.22	5	11.02
	1"	1"	153.1	2220	900	51	740	300	120	4.72	90	3.54	44	1.73	315	12.40	8	17.64
	1"	1"	255.5	3705	1500	51	740	300	115	4.53	120	4.72	44	1.73	400	15.75	12.3	27.12
	1"	1"	425.5	6170	2500	51	740	300	115	4.53	120	4.72	50.6	1.99	400	15.75	14	30.86
D actual area: 0.801cm²/0.124 in²	1/2"	1"	19.7	285	150	19.7	285	150	95	3.74	85	3.35	28.3	1.11	290	11.42	4	8.82
	1/2"	1"	51	740	300	19.7	285	150	95	3.74	85	3.35	31.3	1.23	290	11.42	4.5	9.92
	1/2"	1"	102.1	1480	600	19.7	285	150	95	3.74	85	3.35	31.3	1.23	290	11.42	4.5	9.92
	1/2"	1"	153.1	2220	900	51	740	300	115	4.53	120	4.72	41	1.61	400	15.75	10.9	24.03
	1/2"	1"	255.5	3705	1500	51	740	300	115	4.53	120	4.72	41	1.61	400	15.75	10.9	24.03
	3/4"	1"	19.7	285	150	19.7	285	150	95	3.74	85	3.35	28.3	1.11	290	11.42	4	8.82
	3/4"	1"	51	740	300	19.7	285	150	95	3.74	85	3.35	31.3	1.23	290	11.42	4.5	9.92
	3/4"	1"	102.1	1480	600	19.7	285	150	95	3.74	85	3.35	31.3	1.23	290	11.42	4.5	9.92
	3/4"	1"	153.1	2220	900	51	740	300	115	4.53	120	4.72	41	1.61	400	15.75	10.9	24.03
	3/4"	1"	255.5	3705	1500	51	740	300	115	4.53	120	4.72	41	1.61	400	15.75	10.9	24.03
	1"	1"	19.7	285	150	19.7	285	150	95	3.74	85	3.35	29.9	1.18	290	11.42	4	8.82
	1"	1"	51	740	300	19.7	285	150	95	3.74	85	3.35	33.1	1.30	290	11.42	4.6	10.14
	1"	1"	102.1	1480	600	19.7	285	150	95	3.74	85	3.35	33.1	1.30	290	11.42	4.6	10.14
	1"	1"	153.1	2220	900	51	740	300	115	4.53	120	4.72	50.6	1.99	400	15.75	10.9	24.03
	1"	1"	255.5	3705	1500	51	740	300	115	4.53	120	4.72	50.6	1.99	400	15.75	12.3	27.12
E actual area: 1.431 cm²/0.222 in²	3/4"	1"	19.7	285	150	19.7	285	150	95	3.74	85	3.35	28.3	1.11	290	11.42	4.2	9.26
	3/4"	1"	51	740	300	19.7	285	150	95	3.74	85	3.35	31.3	1.23	290	11.42	4.8	10.58
	3/4"	1"	102.1	1480	600	19.7	285	150	115	4.53	120	4.72	31.3	1.23	400	15.75	9	19.84
	3/4"	1"	153.1	2220	900	51	740	300	115	4.53	120	4.72	41	1.61	400	15.75	11	24.25
	1"	1"	19.7	285	150	19.7	285	150	95	3.74	85	3.35	29.9	1.18	290	11.42	4.2	9.26
	1"	1"	51	740	300	19.7	285	150	95	3.74	85	3.35	31.1	1.22	290	11.42	5	11.02
	1"	1"	102.1	1480	600	19.7	285	150	115	4.53	120	4.72	31.1	1.22	400	15.75	9.5	20.94
	1"	1"	153.1	2220	900	51	740	300	115	4.53	120	4.72	44	1.73	400	15.75	12.3	27.12
F actual area: 2.270 cm²/0.352 in²	1"	1"1/2	19.7	285	150	19.7	285	150	115	4.53	110	4.33	15.8	0.62	35	1.38	7.8	17.20
	1"	1"1/2	51	740	300	19.7	285	150	115	4.53	110	4.33	19.1	0.75	350	13.78	8.5	18.74
	1"1/2	1"1/2	19.7	285	150	19.7	285	150	115	4.53	110	4.33	33.1	1.30	350	13.78	8.5	18.74
	1"1/2	1"1/2	51	740	300	19.7	285	150	115	4.53	110	4.33	36.2	1.43	350	13.78	2	4.41
G actual area: 3.664 cm²/0.568 in²	1"	1"1/2	19.7	285	150	19.7	285	150	115	4.53	110	4.33	15.8	0.62	350	13.78	7.8	17.20
	1"1/2	1"1/2	19.7	285	150	19.7	285	150	115	4.53	110	4.33	33.1	1.30	350	13.78	8.7	19.18

1. Comply with EN 1759-1 - EN 1092-1 (Former DIN) on request.
2. Integral flange for ASME B16.5 connections

9 SERIES – Standard configuration

Materials for standard applications, high temperature, low temperature and corrosive fluids.

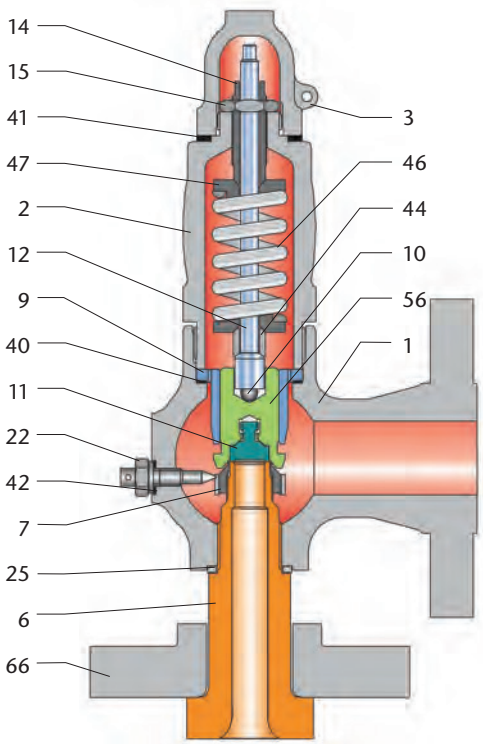

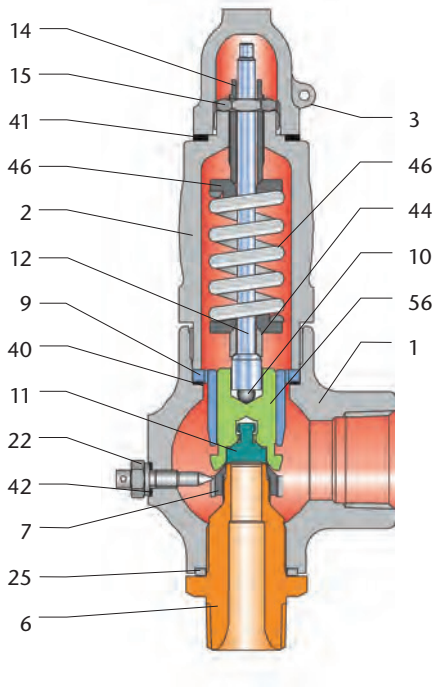

Standard Material			
Tag	**Designation**	**Carbon Steel Material Code A [-29°C to +454°C] [-20°C to +849°F]**	**Stainless Steel Material Code X [-60°C to +454°C] [-76°F to +849°C]**
1	Body	SA 216 Gr WCC	SA 351 Gr CF3M
2	Bonnet	CS LF2 or SS 316L	SA 351 Gr CF3M or SS 316L
3	Cap	SA 216 Gr WCC or SS 316L	SA 351 Gr CF3M or SS 316L
6	Nozzle (Base)	SS 316L	SS 316L
7	Adjusting Ring	SA 351 Gr CF3M	SA 351 Gr CF3M
9	Guide	A 564 Gr 630	A 564 Gr 630
10	Ball	CS	SS
11	Disc	SS 316L	SS 316L
12	Spindle	13% Cr or SS 316L	SS 316L
14	Adjusting Screw	SS 316L	SS 316L
15	Lock Nut	SS 316L	SS 316L
22	Adjusting Ring Screw	SS 316L	SS 316L
25	Nozzle Gasket	SS 316L	SS 316L
40-41-42	Gasket	SS	
44	Spacer	SS 316L	SS 316L
46	Spring	Alloy X750	
47	Spring Washers (Upper & Lower)	SS 316L	SS 316L
56	Disc Holder	SS 316L	SS 316L
66	Lapped Flange	A105	SS 316L

Note:

1. Stellited seat for 900# and over for B and D orifices.
2. Other materials (such as superalloy) on request.

9 SERIES – Special configuration

Materials for Cryogenic and Liquefied Natural Gas.

Liquefied Natural Gas and more generally cryogenic applications require special features for the internal materials.

End-users and contractors must be aware that any leakage on cryogenic applications could create an ice ball around the seat and affect the pressure safety valve reliability.

In order to prevent any leakage due to seat damage, Trillium recommends the use of soft seat.

Tag	Designation	Stainless Steel Material Code 10 [-196°C to +454°C] [-320°F to +849°C]
1	Body	SA 351 Gr CF3M or SS 316L
2	Bonnet	SA 351 Gr CF3M or SS 316L
3	Cap	SA 351 Gr CF3M or SS 316L
6	Nozzle	SS 316L
7	Adjusting Ring	SA 351 Gr CF3M
9	Guide	SS 316L
10	Ball	SS
11	Disc	SS 316L
11a	Soft Seat	See Soft Disc Material Table
12	Spindle	SS 316L
14	Adjusting Screw	SS 316L
15	Adj. Screw Locknut	SS 316L
16	Washers	SS 316L
22	Adjusting Ring Screw	SS 316L
25	Nozzle Gasket	SS 316L
33	Thermal Spacer	SS 316L
34	Thermal Barrier	Bakelite ®
35	Spacer Ring	Thermoglide
36	Ball	SS
40	Guide Gasket	SS
41	Cap Gasket	SS
42	Adj. R. Screw Gasket	SS
44	Spacer	SS 316L
46	Spring	Alloy X750
56	Disc Holder	SS 316L
66	Lapped Flange	SS 316L
83	Retaining Screw	SS 316L

Soft Seat

Set Pressure	Soft Material
1 to 26 barg	PTFE
26 to 66 barg	PCTFE
66 to 200 barg	PEEK

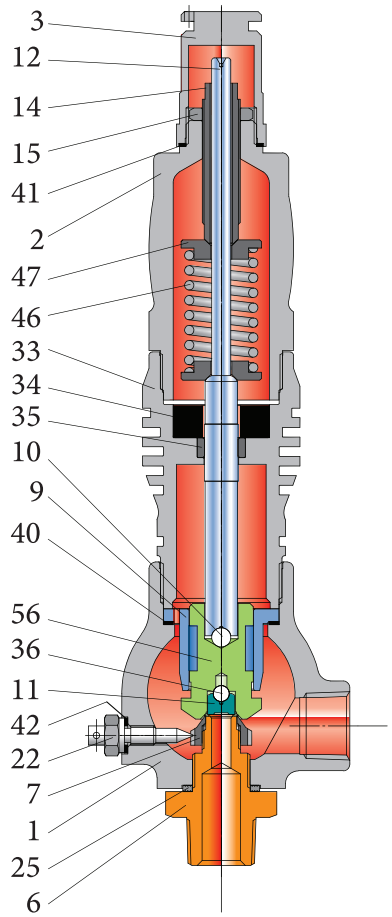

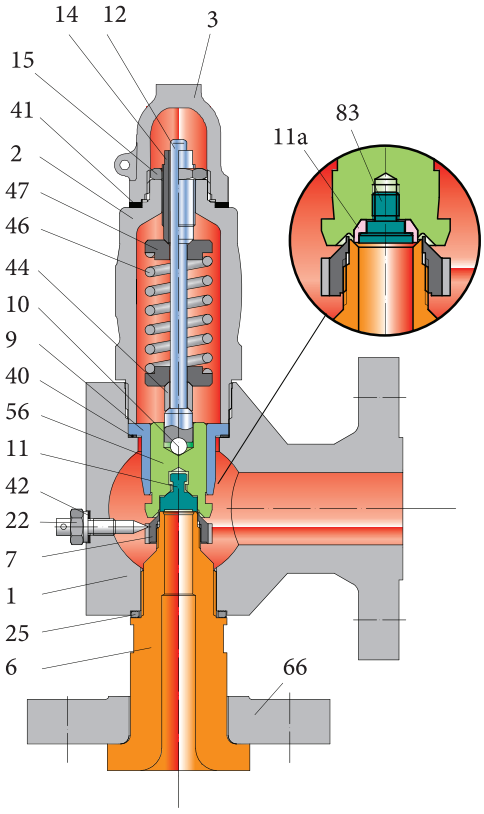

9 SERIES – Special configuration

Materials for Cryogenic and Liquefied Natural Gas.

Many process streams in the oil and gas industry contain enough H2S to cause sulfide stress cracking (SSC) in susceptible materials. It exists in two different domains in which two different standards may be applicable:

- Oil and Gas production: NACE MR0175/ISO 15156
  - Part 1 - 2001: General principles for selection of cracking-resistant materials
  - Part 2 - 2003: Cracking-resistant carbon and low alloy steels, and the use of cast irons.
  - Part 3 - 2003: Cracking-resistant CRAs (corrosion-resistant alloys) and other alloys.
- Oil and gas refining: NACE MR0103

The last revisions of NACE MR0175/ISO 15156 shows results of the inadequacy of some standard materials commonly used in the oil and gas industry. We then highlight this point and ask the end-user to clearly specify the condition of use (fluid details, pressure and temperature) in order to be able to select acceptable materials.

Trillium manufactures a large variety of valves used in sour service. Based on our experience and the last edition of the standards, the definition of the actual critical components in a pressure safety valve should be mutually agreed between the purchaser and Trillium.

Please note, materials are applicable for NACE MR0175 / ISO 15156 according to the different paragraphs of the standard. As a first approach, we can note the following:

Materials	Paragraph
SA 352 Gr LCC	MR0175/ISO 15156-2 ¶ A2-1-2
SA 216 Gr WCC	MR0175/ISO 15156-2 ¶ A2-1-2
SA 217 Gr WC6	MR0175/ISO 15156-2 ¶ A2-1-2
SA 479 Gr 316L	MR0175/ISO 15156-3 ¶ A2-2 Table 2
UNS S31803	MR0175/ISO 15156-3 ¶ A7-2 Table 24
UNS N06625	MR0175/ISO 15156-3 ¶ A4-2 Table 13
UNS N07750	MR0175/ISO 15156-3 ¶ A2-9 Table 36

As an example of selection, Trillium can advise the following valve configuration.
The conditions here are not so restrictive: temperature limited to 149°C (300°F).

SGA application : applicable on primary side only

Part N°	Part Name	Material	Applicable Paragraph
1	Body	SA 216 Gr WCC	MR0175/ISO 15156-2 ¶ A2-1-2
6 + 11	Nozzle & Disc	SS 316L	MR0175/ISO 15156-3 ¶ A7-2 Table A24
	Other parts	Standard	

Note : Above 233°C (500°F), parts 6-11 will be proposed in UNS N06625 (Alloy 625).

SGB application : applicable on primary and secondary sides

Part N°	Part Name	Material	Applicable Paragraph
1	Body	SA 216 Gr WCC	MR0175/ISO 15156-2 ¶ A2-1-2
2	Bonnet	SA 216 Gr WCC	MR0175/ISO 15156-2 ¶ A2-1-2
4	Cap	SA 216 Gr WCC	MR0175/ISO 15156-2 ¶ A2-1-2
6 + 11	Nozzle & Disc	SS 316L	MR0175/ISO 15156-3 ¶ A7-2 Table A24
9	Guide	SS 316L	
19	Balanced Bellows	UNS N06625 (Alloy 625)	MR0175/ISO 15156-3 ¶ A4-2 Table A13
46	Spring	Alloy X750	
	Other parts	Standard	

Note:

1. Above 233°C (500°F), parts 6-11-19 will be proposed in UNS N06625 (Alloy 625).

Accessories

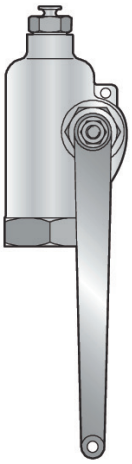

1) Packed lifting lever

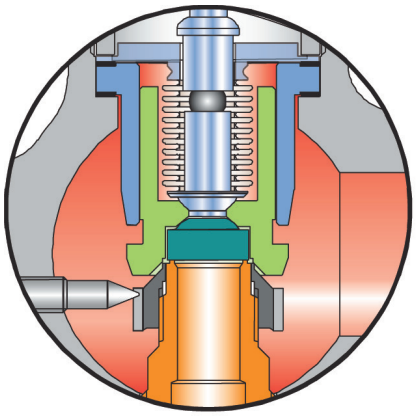

2) Balanced Bellows
(D & F Orifices)

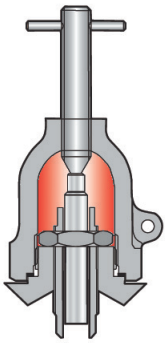

3) Test gag

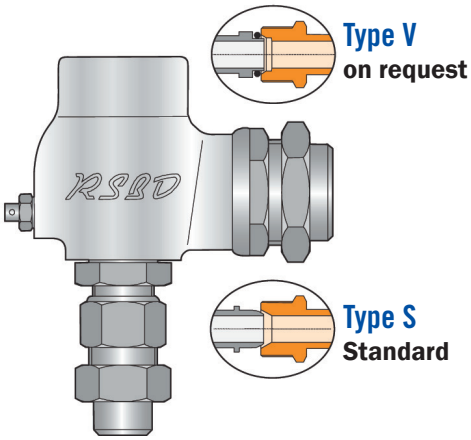

4) Butt-Welding fittings inlet & outlet
(3 pieces union couplings)

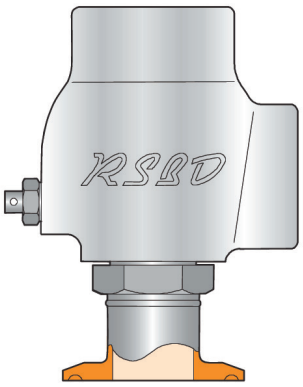

5) Inlet "Clamp" connection

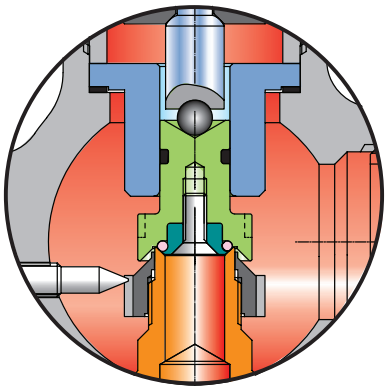

6a) Conventional Soft seat

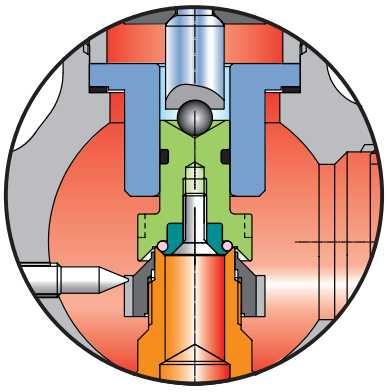

6b) Balanced Soft seat

Soft Seat

Set Pressure	Soft Material
1 to 26 barg	PTFE
26 to 66 barg	PCTFE
66 to 200 barg	PEEK

Note:

1. these values are applicable upto 25°C - for higher temperature, please consult the factory.

Special

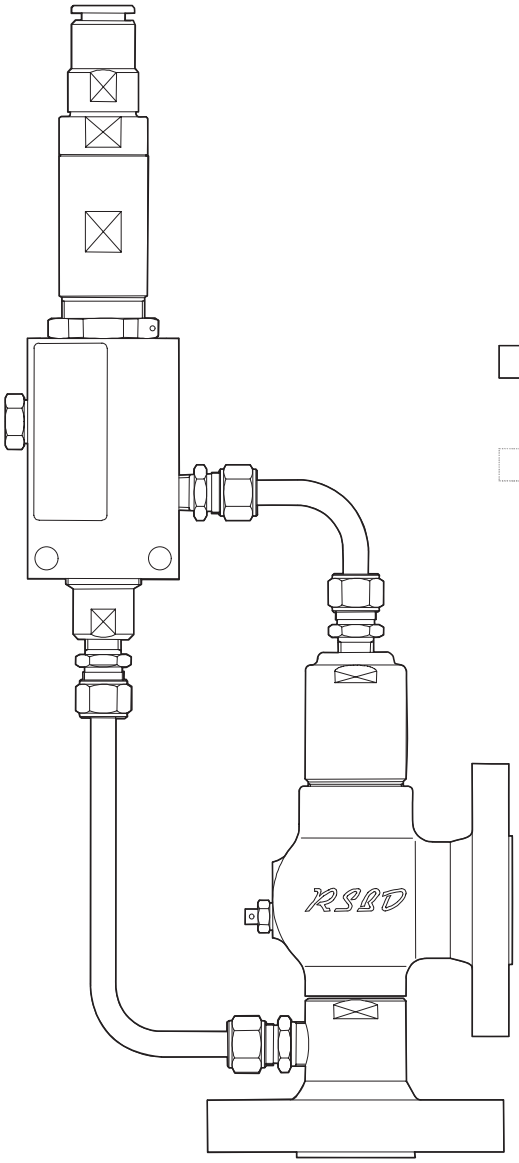

Pilot operated type (71 series)
(See our POSRV brochure)

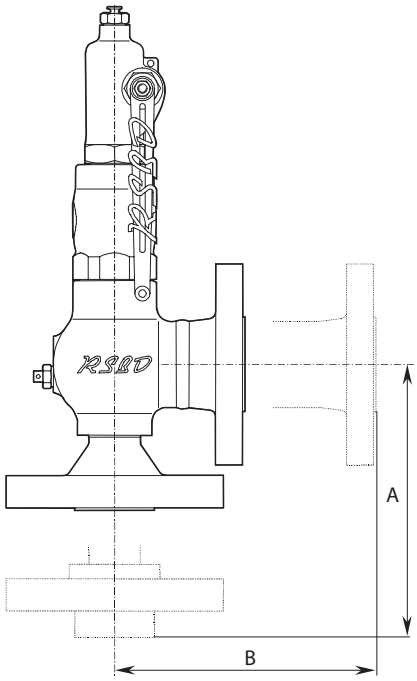

A & B dimensions on request

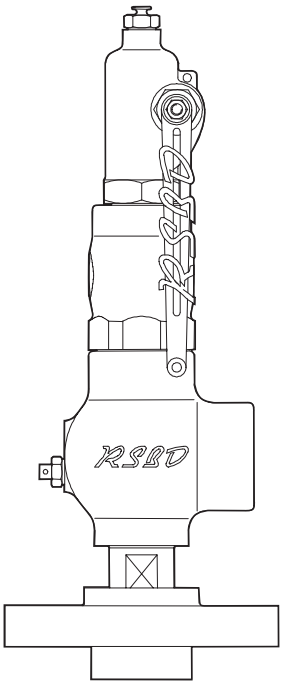

Mixed connections

Note:

1. Trillium can produce any forged body arrangement in order to meet high pressure or temperature and special dimensions.
2. On application, Trillium can supply the 18 Series (special) up to 990 barg (14,358 psig) with an orifice C of 0.385 cm2 (0.0596 in2). This valve is CE marked (PED 97/23/CE)

Model code system

1	2	3	4	5	6	7	8	9
9	B	X	4	H	G	H	N	F

1 → **Type : 9**

2 → **Orifice :**
- (B-D-E-F-G)

3 → **Material of Construction :**
- 10 : A 351 Gr CF3M (Cryogenic)
- A : A 216 Gr WCC
- X : A 351 Gr CF3M (Std Application)
- E : A 350 Gr LF2
- L : A 352 Gr LCC
- A201 to A206 : Alloy 20
- AL1 & AL6 : Alloy 625
- AY1 & AY6 : Alloy 825
- AV1 & AV6 : Alloy 254 SMO
- CN1 & CN7 : A 351 Gr CN3MN
- D1 & D6 : Duplex
- H1 & H6 : Alloy C
- M1 & M6 : Alloy 400
- SD1 & SD6 : Superduplex
- MRA & MRB : NACE MR0103
- SGA & SGB : NACE MR0175 / ISO 15156

4 → **Inlet Pressure Class (ASME):**
- 1: 150#
- 2: 300#
- 3: 600#
- 4: 900#
- 5: 1500#
- 6: 2500#

5 → **Spring Material :**
- H: Alloy X750

6 → **Inlet Size :**
- F: 1⁄2”
- G: 3⁄4”
- H: 1”
- K: 1 1⁄2”

7 → **Outlet Size :**
(B Orifice only)
- – F: 1⁄2”
- – H: 1”

8 → **Connections :**
- A: ASME B16.5 (Equivalent to EN 1759-1)
- P: EN 1092-1
- K: Inlet Male con. BSP / Outlet Female cyl. BSP
- N: Inlet Male NPT / Outlet Female NPT
- N2: Inlet Female NPT / Outlet Female NPT
- Uœ: 3 piece union
- Z: Other

9 → **Options :**
- A: Without option
- C : Bellows leak sensor
- F: Packed lifting lever
- J : Soft seat disc (standard FKM)
- J1 : Soft seat disc (PTFE)
- J2 : Soft seat disc (NBR)
- J3 : Soft seat disc (EPDM)
- J4 : Soft seat disc (standard HNBR)
- J5 : Soft seat disc (standard FFKM)
- J6 : Soft seat disc (PEEK)
- J7 : Soft seat disc (PCTFE)
- J8 : Soft seat disc (FVMQ)
- J9 : Soft seat disc (FFKM Hot temperature)
- J0 : Soft seat disc (Special)
- L: Lapped flange at the inlet
- P: Bellows
- P1 : Alloy 625 LCF balanced bellows
- P9 : Balanced piston
- PI : Position indicator
- Q1 : Cryogenic cleaning
- Q2 : Oxygen cleaning
- S : Nozzle and disc stellited
- T2 : Equipotential device
- U : UV stamp (unavailable for B orifice)
- V: Test gag
- W : 300# outlet end
- X1 : CRN (Canadian Certification)
- X2 : SELO TS (Chinese Certification)
- X3 : EAC TR CU 032 (Eurasion Certification)
- X4 : CE Marking
- X5 : IBR (Indian Certification)
- Z: Others

Spring Loaded Safety Relief Valves

Body in carbon steel, stainless steel, alloy and exotic materials; with bellows, lever and other accessories, to ensure suitability for all service conditions.

Pilot Operated Pressure Relief Valves

The Sarasin-RSBD pilot-operated pressure relief valve is an autonomous valve. It does not need any auxiliary source of power to operate. The advanced technology of Sarasin-RSBD valves has been adopted by the nuclear industry, French and U.S. Navies and by the Oil and Gas industries. It is complementary to the range of spring-loaded safety relief valves and covers a wide field of applications including severe conditions.

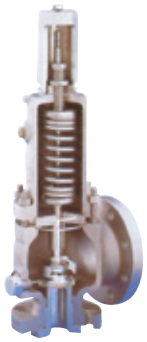

Starflow P3/P4/P5

ASME Section I & VIII Division 1
(UV & V stamp for liquid service)
API STD 526
Inlet Sizes: 1" through 12"
Inlet Rating: 150# through 2500#
Temp : -196°C to +538°C
[-320°F to +1000°F]

76 Series
Full Nozzle

API STD 526 (spring loaded tables)
Inlet Sizes: 1" through 12"
Inlet Rating: 150# through 2500#
Temp : -196°C to +327°C
[-320°F to +620°F]

78 Series
Semi Nozzle

API STD 526
Inlet Sizes: 1" through 8"
Inlet Rating: 150# through 2500#
Temp : -60°C to +327°C
[-76°F to +620°F]

86 Series
Full nozzle

API STD 526 (spring loaded tables)
Inlet Sizes: 1" through 8"
Inlet Rating: 150# through 2500#
Temp : up to 590°C
[up to +1094°F]

9 Series

ASME Section VIII Div. 1 Portable
SRV - Full nozzle Screwed / Flanged
/ Welded Size: 1⁄2" to 1 1⁄2"
Rating: 150# to 2500#
Temp:-196°C to +454°C
[-320°F to +849°F]

Advantages of the Sarasin-RSBD Pilot-operated pressure relief valve

- leak-free pilot
- on-off opening, fully open or closed (limited maintenance)
- perfect tightness (no production loss)
- perfect operation, even with capacities smaller than those rated for all types of fluids
- excellent repeatability and reliability
- adjustable blowdown (pop action)
- no pressure/flow limit
- with additional equipment (solenoid valve), the safety relief valve can be used as a discharge valve.

To meet the most varied requirements, Sarasin- RSBD selects the appropriate pilot detector for the safety relief valve required (semi or full nozzle, with bellows, piston etc.)

Starvalve Changeover Valves

Low pressure drop COV Standard COV
Combined valve with linkage system
Sizes: 1⁄2" - 10"
Pressure: up to 100 barg [1450 psig]
Temp:-60°C to +427°C
[-76°F to +800°F]

Gas - Liquid
Modulating action

Gas
Pop action

High temperature steam - Gas
Pop action

Trillium Flow Technologies France SAS

Rue JB Grison, Z.I du Bois Rigault, 62880 Vendin Le Vieil FRANCE
T: +33 (0) 3 21 79 54 50; Fax: +33 (0) 3 21 28 62 00; E: sales.sarasinrsbd@trilliumflow.com

www.trilliumflow.com