PROFILE VIEW

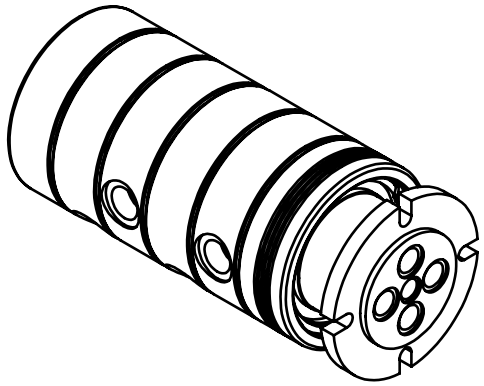

FRONT VIEW

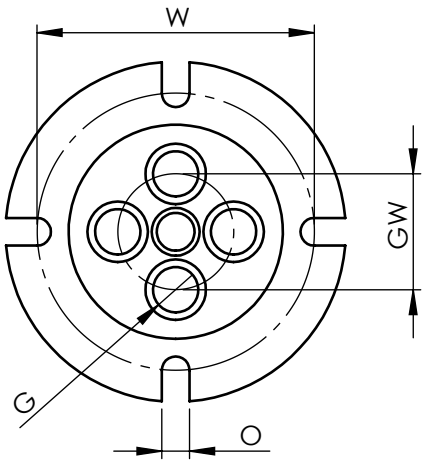

4 X 3/4" (DN20) - M1 SERIES MULTIPORT JOINT

(STAINLESS STEEL BODY & SHAFT)

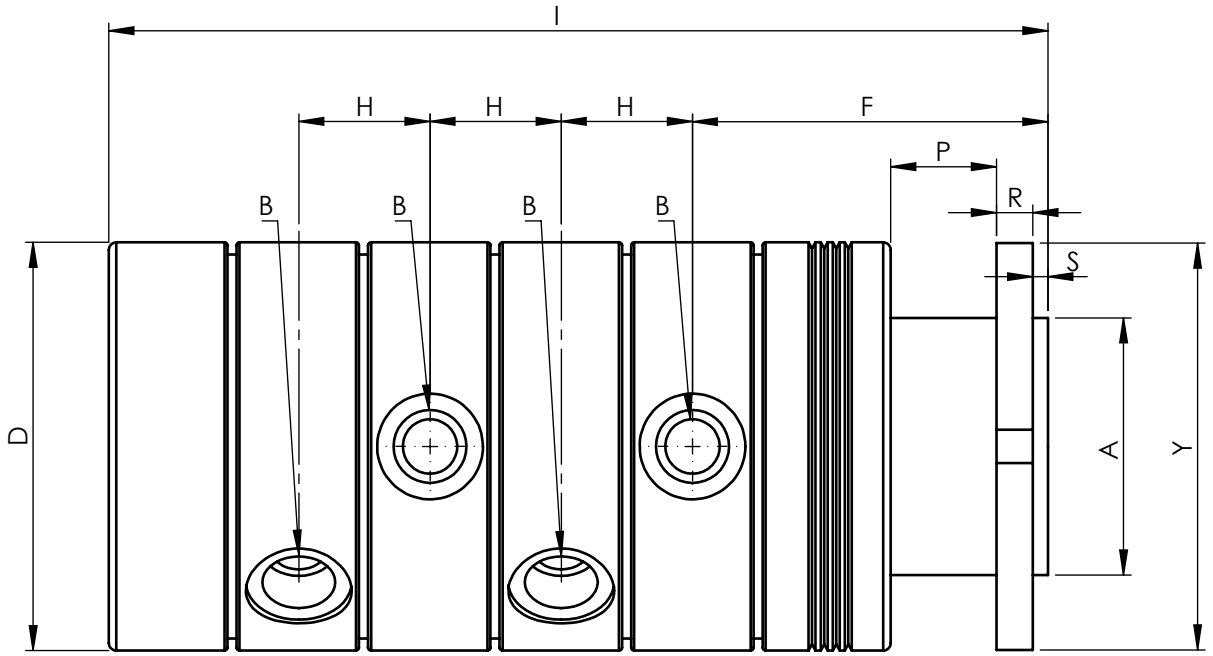

*Please ask for another thread types.

SIZE (DN)	MODEL NO	B	Y ⌀	A ⌀	G ⌀	D ⌀	F	H	I	S	P	R	W ⌀	GW ⌀	O	KG
4 X 3/4"	M1-24201-200	3/4" NPT	135	85	18	135	117,50	43,40	310,60	5	35	12	110	46	11	27,80
4 X 3/4"	M1-24202-200	3/4" BSP	135	85	18	135	117,50	43,40	310,60	5	35	12	110	46	11	27,80
4 X 3/4"	M1-24203-200	3/4" BSPP	135	85	18	135	117,50	43,40	310,60	5	35	12	110	46	11	27,80

FLUID	MAX. PRESSURE	MAX. Rpm	MAX. TEMPERATURE	VACUUM
AIR / GAS	10 bar	10 bar - 5 rpm 1 bar - 25 rpm	60°C	6,7 kpa
WATER / GLYCOL	10 bar	10 bar - 25 rpm 1 bar - 150 rpm	90°C	6,7 kpa
HYDRAULIC OIL	250 bar	250 bar - 10 rpm 60 bar - 250 rpm	90°C	6,7 kpa

TOLERANCES			
DIMENSIONS	0,5-6	6-30	30-250
TOLERANCE	±0,05	±0,1	±0,2
HOLE (⌀)	+0,05	+0,1	+0,2
SHAFT (⌀)	-0,05	-0,1	-0,2

SCALE	
MAIN DRAWING	1:2,5
LEFT 1	1:5
LEFT 2	1:3

Rototech

ROTOTECH MAKİNA SAN. VE DIŞ TİC. LTD. ŞTİ.

Perpa Tic. Mrk. B Blok K: 2 No: 26 Şişli / İstanbul / Turkey
Tel: ++90 (212) 320 02 33 / 34 / 38 Fax: ++90 (212) 320 06 73
www.rototech.com.tr