Model: SRC-S-353_413_463

RefComp
REFRIGERANT COMPRESSORS
Lonigo (Vicenza) Italy

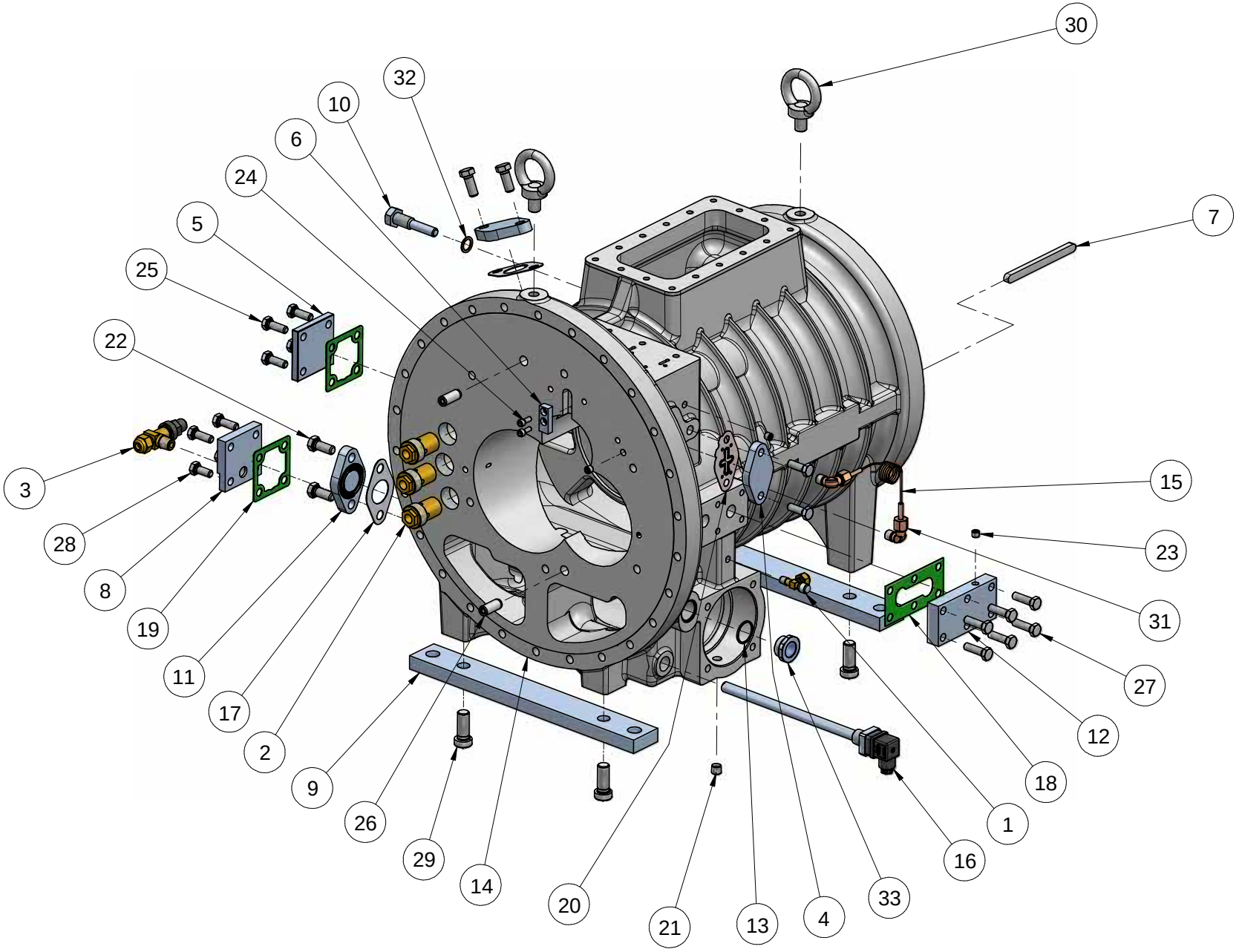

SRC-S-353_413_463 Rotor housing

ATTENZIONE: il presente disegno è di esclusiva proprietà REFCOMP.
E' fatto divieto di riproduzione e di divulgazione anche parziale secondo quanto regolato dalle norme vigenti.

ATTENTION: the present drawing is exclusively ownership of REFCOMP.
Is forbidden to reproduce and to disclose, even if partialy, the present document in conformity to law regulation in force.

RefComp Spa
36045 Lonigo
Vicenza - Italy
Via Enrico Fermi, 6
Tel +39 0444 726726
Fax +39 0444 436386

REFRIGERANT COMPRESSORS
Lonigo (Vicenza) Italy

Pos	Code	Description	Serial number	Note	Q.ty
1	500261	Tee-piece union 1/8"NPT-1/4"-1/4"SAE			1
2	500580	Max valve 30bar 1"NPT			3
3	503335	3/8"NPT oil discharge valve assembly			1
4	510170	Closing oval plate I=65			1
5	513200	Rotor housing plug			1
6	514660	Key 16x10x38			1
7	514760	Key 11.95x8x140			1
8	514790	Oil discharge cover 3/8"NPT			1
9	515190	Compressor supporting plate			2
10	517220	Stator fixing screw			1
11	518270	Closing oval plate I=70			2
12	519290	Oil and probe connection plate "SRC-S-353/603 series"			1
13	520664	Aluminium ring Ø28.6xØ31.8x2			1
14	533936	Rotor housing			1
15	540701	Capillary L=838 Ø1.78			1
16	583110	Crankcase heater 230V 275W Ø14			1
17	591030	Oval flange gasket I=70			2
18	592320	Oil connection plate gasket "SRC-S-353/603 series"			1
19	592730	Closing plate gasket 75x75			2
20	592732	Step load gasket 'L4'			1
21	610050	Plug 1/4"NPT			1
22	610640	Screw M12x30			4
23	610680	Plug 1/8"NPT			3
24	611120	Screw M6x16			2
25	611370	Screw M10x30			8
26	611940	Cylindrical pin Ø14x35			2
27	612150	Galvanized screw M10x35			6
28	612160	Screw M10x25			2
29	613420	Screw M16x40			4
30	613710	Eyebolt M16			2
31	640610	90° connection 1/4"NPT			2
32	680030	Copper washer Ø16x22x1.5			1
33	700210	Sight glass cover 1"1/8-18UNEF			1