Dialight



Dialight LED Lighting Fixture Catalogue

for Industrial and Hazardous Locations

April 2016

On when it matters most.

Products and solutions that protect your business


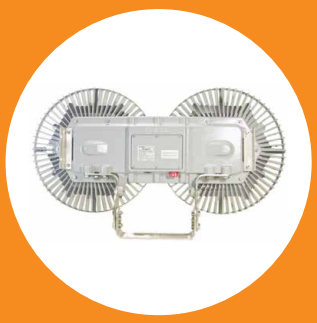









About Dialight

Dialight (LSE: DIA.L) is leading the energy efficient LED lighting revolution around the world for industrial and hazardous areas. For more than 40 years, it has been committed to the development of LED lighting solutions that enable organisations to vastly reduce energy use and maintenance needs, improve safety, ease of disposal and reduce CO2 emissions.

Vigilant®

- LED lighting for general industrial applications

DuroSite®

- LED lighting for general industrial applications

SafeSite®

- LED lighting for hazardous applications

Value Proposition

- 10+ years of maintenance free lighting
- Improved safety, colour quality
- Improved temperature rating (T-rating)
- Lower total cost of ownership, quick ROI
- Lower energy consumption by > 50%
- Significantly reduce CO_2 emissions



Table of Contents

Vigilant® High Efficiency LED Lighting for Industrial Applications

Vigilant® LED Lighting Fixtures for Industrial Applications Overview 6
Vigilant® LED High Bay - 60,000lm 14-15
Vigilant® LED High Bay 16-17
Vigilant® H2 Series LED High Bay 18-19
Vigilant® LED Dual Floodlight 20-21
Vigilant® LED Floodlight 22-23
Vigilant® LED High Bay with Dali or Wireless Controls 24-25
Wireless Occupancy Sensor 26-27

DuroSite® LED Lighting for Industrial Applications

DuroSite® LED Lighting Fixtures for Industrial Applications Overview 7-8
DuroSite® LED Low Bay 28-29
DuroSite® LED Floodlight 30-31
DuroSite® LED End-to-End Linear 32-33
DuroSite® LED Linear - Low Profile 34-35
DuroSite® LED Stainless Steel Linear 36-37
DuroSite® LED Stainless Steel Linear - Battery Backup 38-39
DuroSite® LED Conveyor Light 40-41
DuroSite® LED Area Light 42-45
DuroSite® LED Bulkhead 46-47
DuroSite® LED Shower Safe Luminaire - Battery Backup 48-49

SafeSite® LED Lighting for Hazardous Applications

SafeSite® LED Lighting Fixtures for Hazardous Applications Overview 9-10
SafeSite® LED High Bay 50-51
SafeSite® LED Stainless Steel Linear 52-53
SafeSite® LED Stainless Steel Linear - Battery Backup 54-55
SafeSite® LED Area Light 56-57
SafeSite® LED Area Light - Junction Box 58-59
SafeSite® LED Area Light - Amber 60-61
SafeSite® LED Bulkhead 62-65

StreetSense® LED Fixture for Infrastructure Solutions

StreetSense® LED Street Light 66-67

Dialight LED Obstruction Lighting for Signaling Solutions

Obstruction Lighting Solutions - FAA Approved Systems 68
Vigilant® FAA LED Obstruction Lights 69

Vigilant® LED Lighting Fixtures
for Industrial Applications



LED High Bay - 60,000lm

Wattage Range:	480W
Lumen Output Range:	60,000
Lumens per Watt:	125
Input Voltage:	120 - 277V AC



LED High Bay

Wattage Range:	212W / 144W / 112W / 88W
Lumen Output Range:	26,500 - 11,000
Lumens per Watt:	125
Input Voltage:	100 - 277V AC
	110 - 277V AC



LED High Bay - H2 Series LED High Bay

Wattage Range:	180W
Lumen Output Range:	25,250
Lumens per Watt:	140
Input Voltage:	110 - 277V AC

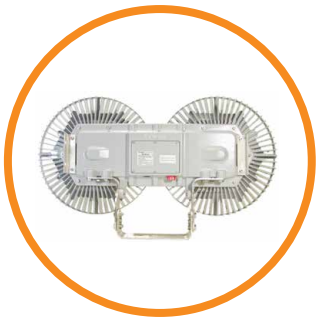

LED Dual Floodlight

Wattage Range:	424W
Lumen Output Range:	55,000 - 53,000
Lumens per Watt:	130 - 125
Input Voltage:	120 - 277V AC



LED Floodlight

Wattage Range:	130W
Lumen Output Range:	27,500
Lumens per Watt:	125
Input Voltage:	120 - 277V AC

When ordering, please refer to www.dialight.com and the current datasheets to ensure proper and most up to date information.

DuroSite® LED Lighting Fixtures
for Industrial Applications



LED Low Bay

Wattage Range:	80W
Lumen Output Range:	6,000
Lumens per Watt:	75
Input Voltage:	100 - 277V AC



LED Floodlight

Wattage Range:	140W / 130W / 109W
Lumen Output Range:	15,000 - 10,500
Lumens per Watt:	115 - 96
Input Voltage:	100 - 277V AC



LED End-to-End Linear

Wattage Range:	60W / 32W
Lumen Output Range:	7,500 - 3,500
Lumens per Watt:	125 - 109
Input Voltage:	120 - 277V AC



LED Linear - Low Profile

Wattage Range:	66W / 33W
Lumen Output Range:	7,250 - 3,300
Lumens per Watt:	110 - 100
Input Voltage:	120 - 277V AC



LED Stainless Steel Linear

Wattage Range:	64W / 32W
Lumen Output Range:	5,100 - 2,600
Lumens per Watt:	86
Input Voltage:	100 - 277V AC

When ordering, please refer to www.dialight.com and the current datasheets to ensure proper and most up to date information.

DuroSite® LED Lighting Fixtures
for Industrial Applications



LED Linear - Battery Backup

Wattage Range:	67W / 34W
Lumen Output Range:	5,100 - 2,600
Lumens per Watt:	74 - 73
Input Voltage:	230 / 240V AC



LED Conveyor Light

Wattage Range:	60W
Lumen Output Range:	4,150
Lumens per Watt:	69
Input Voltage:	100 - 277V AC



LED Area Light

Wattage Range:	58W
Lumen Output Range:	6,000
Lumens per Watt:	103
Input Voltage:	100 - 277V AC



LED Bulkhead

Wattage Range:	34W / 22W / 11W
	36W / 24W / 13W
Lumen Output Range:	2,250 - 600
Lumens per Watt:	66 - 46
Input Voltage:	See page for details

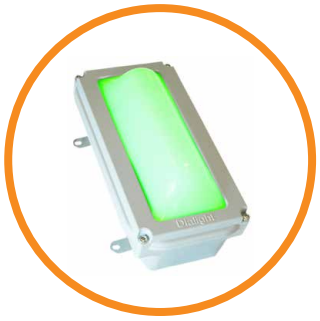

LED Shower Safe Luminaire

Wattage Range:	24W
Lumen Output Range:	See page for details
Lumens per Watt:	See page for details
Input Voltage:	230 / 240V AC

When ordering, please refer to www.dialight.com and the current datasheets to ensure proper and most up to date information.

SafeSite® LED Lighting Fixtures
for Hazardous Applications



LED High Bay

Wattage Range:	172W / 150W
Lumen Output Range:	12,500 - 9,500
Lumens per Watt:	73 - 63
Input Voltage:	100 - 277V AC



LED Stainless Steel Linear

Wattage Range:	64W / 32W
Lumen Output Range:	5,100 - 2,600
Lumens per Watt:	81
Input Voltage:	110 - 277V AC



LED Stainless Steel Linear - Battery Backup

Wattage Range:	70W / 35W
Lumen Output Range:	5,100 - 2,800
Lumens per Watt:	74 - 73
Input Voltage:	230 / 240V AC

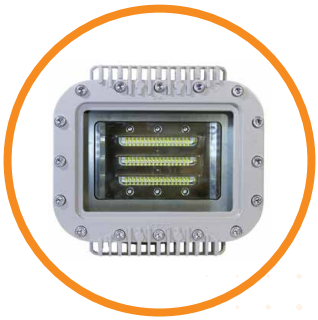

LED Area Light

Wattage Range:	55W / 22W
Lumen Output Range:	6,000 - 2,000
Lumens per Watt:	114 - 64
Input Voltage:	100 - 277V AC

When ordering, please refer to www.dialight.com and the current datasheets to ensure proper and most up to date information.

SafeSite® LED Lighting Fixtures
for Hazardous Applications



LED Area Light - Junction Box

Wattage Range:	22W
Lumen Output Range:	2,500 - 2,000
Lumens per Watt:	114 - 92
Input Voltage:	100 - 277V AC



LED Area Light - Amber

Wattage Range:	58W
Lumen Output Range:	3,700
Lumens per Watt:	64
Input Voltage:	100 - 277V AC



LED Bulkhead

Wattage Range:	34W / 22W / 11W 36W / 24W / 13W
Lumen Output Range:	2,250 - 600
Lumens per Watt:	66 - 46
Input Voltage:	See page for details

When ordering, please refer to www.dialight.com and the current datasheets to ensure proper and most up to date information.



Hazardous Area Ratings

Fixed and portable fixtures for installation and use in hazardous areas.

Zones

The zone defines the probability of hazardous material being present in an explosive concentration in the atmosphere.

Zone	Hazardous Material in Surrounding Atmosphere
Zone 0, 20	Area in which an explosive gas / dust mixture is continuously present or present for long periods
Zone 1, 21	Area in which an explosive gas / dust mixture is likely to occur for short periods in normal operation
Zone 2, 22	Area in which an explosive gas / dust mixture is present for a very short time due to an abnormal condition

Protection Types

Types are used to denote the protection concept utilised in the device.

Ex	Presence of Hazardous Material	Zones
Ex d	Flameproof (Explosion proof) Enclosure	1, 21, 2, 22
Ex e	Increased Safety	1, 21, 2, 22
Ex m	Encapsulation	1, 21, 2, 22
Ex n or N	Non incentive or/and normally no sparking circuits	2, 22

Temperature Ratings

Certified equipment is tested for maximum temperature rating by approval agencies. Equipment for Group II receives a temperature code indicating the maximum temperatures of the product.

Temperature Rating	
T1	450°C
T2	300°C
T3	200°C
T4	135°C
T5	100°C
T6	85°C

Groups (Gas & Dust)

Equipment is tested for suitability in specified gas groups and dust groups. Gas groups IIA, IIB, IIC. Dust groups IIIA, IIIB, IIIC.

Group	Hazardous Material in Surrounding Atmosphere
Group IIA	Propane group where hazards due to propane may exist
Group IIB	Ethylene group where hazards due to ethylene may exist
Group IIC	Hydrogen group where hazards due to hydrogen or acetylene may exist
Group IIIA	Combustible flyings
Group IIIB	Non-conductive dust
Group IIIC	Conductive dust

Reference:
http://www.engineeringtoolbox.com/hazardous-areas-classification-d_345.html



Corrosion Protection and Coating Process

Surface Preparation

3000-hour Salt Spray Testing
(ASTM B117)

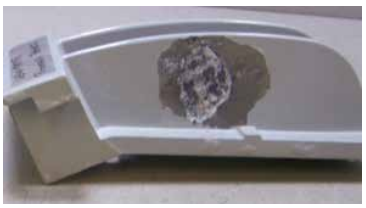

Industry-Standard

- Acid etch iron phosphate conversion
- Rinse
- Acid seal

Dialight

- Proprietary alkaline etching
- Multiple reverse osmosis rinse removing calcium and minerals
- Proprietary surface conversion for chemical and mechanical bond to powder
- Final clean rinse using pure reverse osmosis water

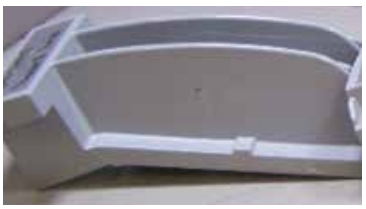

Dialight ACP

- Dialight standard process with additional proprietary steps

Powder Coat

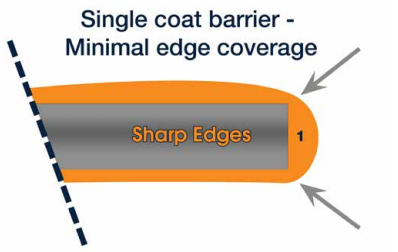

Industry-Standard

- Single layer hybrid epoxy - standard polyester powder coat

Dialight (2 coats)

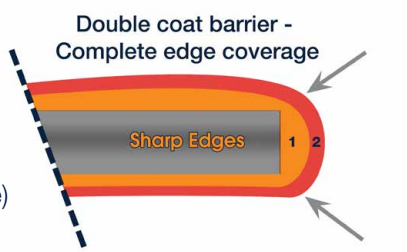

- **1st coat**

  Epoxy primer base coat (much better bonding to the aluminum than polyester)
- **2nd coat**

  Super durable polyester (better UV, chemical, salt and environmental resilience)

Dialight's Advanced Corrosion Protection (ACP)

Dialight has broken another performance barrier with its Advanced Corrosion Protection (ACP) offering to guard against salt corrosion in coastal and offshore environments.

UL 1598A, the standard that defines requirements for Luminaires installed on marine vessels, requires luminaire materials to pass a 200-hour of salt spray test (ASTM B117). Dialight's standard proprietary surface finishes already provide an industry leading 3,000-hours of salt spray protection.

Dialight's Advanced Corrosion Protection technology takes this even further and protects for an extraordinary 6,000-hours of salts spray – comparable to stainless steel. Dialight's material science group has achieved this world-class performance using a proprietary materials combination along with precisely controlled process steps.

The End-to-End Linear will be the first product to offer Dialight's Advanced Corrosion Protection.

Powder Coat Corrosion Protection Comparison

Accelerated Salt Spray Testing (ASTM B117)

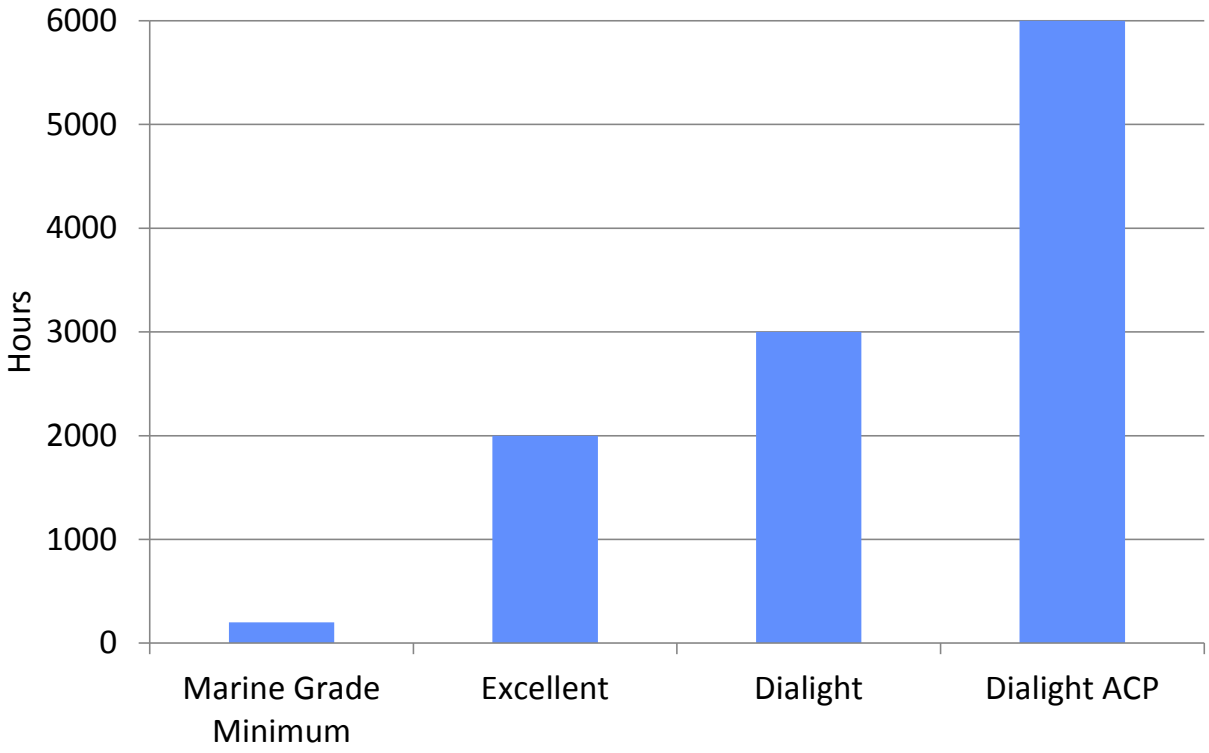



Vigilant LED High Bay - 60,000lm

for Industrial Applications



Ratings and Certifications

- CE (EN55015:2013, EN61547:2009, EN60598:2008, EN62471:2008)
- IP66
- IK05 to EN50102
- L70 rated for 125,000+ hours @ 25°C ambient
- 10yr full performance warranty

*All features not available on every model. Please refer to product part number pages for model specifics.

Mechanical Information

Fixture weight:	27 kg (59 lbs)
Shipping weight:	33 kg (73 lbs)
*Note that the wire box is installed separately from the housing. This allows single installer for fixtures.	
Mounting:	Hook mount
	(4) M20 - sides

Specifications

Voltage options:	120 – 277V AC	**Housing:**	Copper free aluminium
Operating temp:	-40°C to +65°C (-40°F to +149°F)	**Lens:**	Tempered glass
Power factor:	>0.9	**CRI:**	75 (80 min. option available)
THD:	<20%	**CCT:**	5000K (cool white)
Surge protection:	6kV/2 ohm combination wave, as per IEEE C62.41, line to line and line to ground		4000K (neutral white)

*Variable Dimming Model information available au.dialight.com/Assets/Brochures_And_Catalogs/Illumination/MDEXVHB60EUX001.pdf

Comparison

	Warranty	L70
Dialight High Bay	10yr	>125,000
Metal Halide	1	15,000
High Pressure Sodium	1	20,000

Lumens	Wattage	Lm/W	Mounting Heights
60,000	480	125	30m or lower

Dimensions

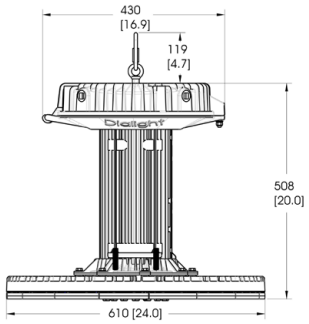

Dimension are in mm [inches]

Light Distribution Pattern

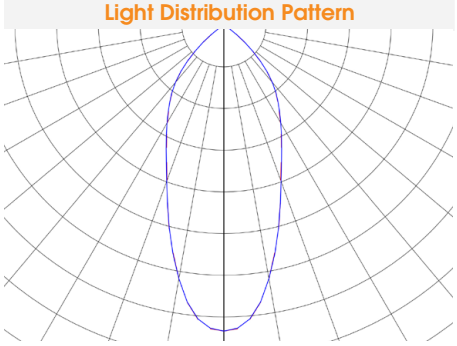

Narrow Pattern

Mounting Options

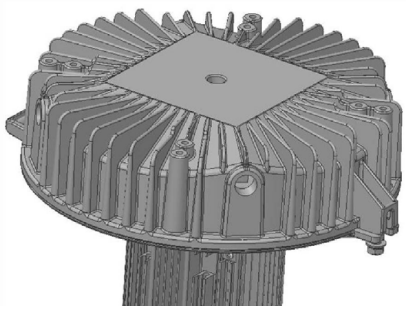

Wiring Box



Top Hat Hinge

Resources:
Datasheet:www.dialight.com/Assets/Brochures_And_Catalogs/Illumination/MDEXVHB60X001.pdf • Case Studies, IES Files, LM79 Reports: http://www.dialight.com

Vigilant LED High Bay - 60,000lm

Ordering Information and Mounting Accessories

Part Number	Initial Fixture Lumens	Wattage	Lm/W	IP Rating	Voltage	Colour Temperature (CCT)	Lens	Light Distribution
120 - 277V AC Models								
H6EGNC44N-HNNG	60,000	480	125	IP66	120 - 277V AC	5000K (cool white)	Tempered glass	Narrow
H6EGNN44N-HNNG	60,000	480	125	IP66	120 - 277V AC	4000K (neutral white)	Tempered glass	Narrow
Variable Dimming Models								
H6EGNC44D-HNNG	60,000	480	125	IP66	120 - 277V AC, 50/60Hz	5000K (cool white)	Tempered glass	Medium
H6EGNN44D-HNNG	60,000	480	125	IP66	120 - 277V AC, 50/60Hz	4000K (neutral white)	Tempered glass	Medium

[1]All values typical unless otherwise stated. Lumen values are typical (tolerance + / - 10%)



H6XCAB240K

- 6M long steel safety rope

Vigilant® LED High Bay
for Industrial Applications



Patent pending

Ratings and Certifications
• CE (EN55015:2013, EN61547:2009, EN60598:2008)
• IEC60068 salt spray testing - severity 1
• IP66 to EN60529
• IK05 to EN50102
• NEMA 4X
• L70 rated for 150,000+ hours @ 25°C ambient
• 10yr full performance warranty

*All features not available on every model. Please refer to product part number pages for model specifics.

Mechanical Information	
Fixture weight:	8.16 kg (18 lbs)
Shipping weight:	10.8 kg (24 lbs)
Mounting:	Hook (supplied)
	Swivel bracket (supplied separately)
Cabling:	3m (10') PVC Power Cord

Specifications			
Voltage options:			
110 – 277V AC	26,500, & 25,750lm models	**Housing:**	Copper free aluminium
100 – 277V AC	18,000, 14,000 & 11,000lm models	**Lens:**	Tempered glass
Operating temp:	-40°C to +65°C (-40°F to +149°F)	**CRI:**	75
Power factor:	>0.9	**CCT:**	5000K (cool white)
THD:	<20%		4000K (neutral white)
Surge protection:	Protection devices capable of handling up to 6kV. Tested for 6kV/2 ohm combination wave, as per IEEE C62.41, line to line and line to ground		

Comparison	Warranty	L70
Dialight High Bay	10yr	>150,000
Metal Halide	1	15,000
High Pressure Sodium	1	20,000

Lumens	Wattage	Lm/W	Mounting Heights
26,500	212	125	24m
18,000	144	125	↕
14,000	112	125	
11,000	88	125	5m

Dimensions

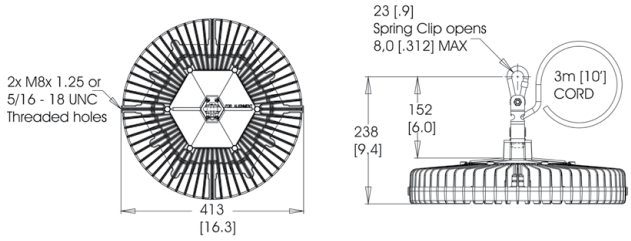

Dimension are in mm [inches]

Mounting Options



Standard Hook



Swivel Bracket

Light Distribution Pattern

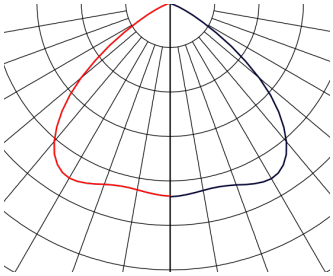

Medium Pattern

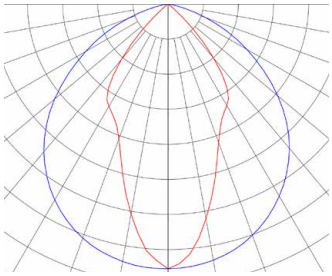

Oval Pattern

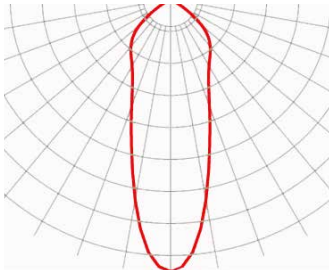

Narrow Pattern

Resources:
Datasheet: www.dialight.com/Assets/Brochures_And_Catalogs/Illumination/MDEXHBX001.pdf • Case Studies, IES Files, LM79 Reports: www.dialight.com

Vigilant® LED High Bay

Ordering Information and Mounting Accessories

Part Number	Initial Fixture Lumens	Wattage	Lm/W	IP Rating	Voltage	Colour Temperature (CCT)	Lens	Light Distribution
Standard Models								
HEZGMC4PN-HNG	26,500	212	125	IP66	110 - 277V AC	5000K (cool white)	Tempered glass	Medium
HEZGNC4PN-HNG	26,500	212	125	IP66	110 - 277V AC	5000K (cool white)	Tempered glass	Narrow
HEZGEC4PN-HNG	25,750	204	125	IP66	110 - 277V AC	5000K (cool white)	Tempered glass	Oval
HEZGMC4KN-HNG	18,000	144	125	IP66	100 - 277V AC	5000K (cool white)	Tempered glass	Medium
HEZLMC4KN-HNG								
HEZGNC4KN-HNG	18,000	144	125	IP66	100 - 277V AC	5000K (cool white)	Tempered glass	Narrow
HEZGEC4KN-HNG	18,000	144	125	IP66	100 - 277V AC	5000K (cool white)	Tempered glass	Oval
HEZGMC4GN-HNG	14,000	112	125	IP66	100 - 277V AC	5000K (cool white)	Tempered glass	Medium
HEZGNC4GN-HNG	14,000	112	125	IP66	100 - 277V AC	5000K (cool white)	Tempered glass	Narrow
HEZGEC4GN-HNG	14,000	112	125	IP66	100 - 277V AC	5000K (cool white)	Tempered glass	Oval
HEZGMC4DN-HNG	11,000	88	125	IP66	100 - 277V AC	5000K (cool white)	Tempered glass	Medium
HEZGNC4DN-HNG	11,000	88	125	IP66	100 - 277V AC	5000K (cool white)	Tempered glass	Narrow
HEZGEC4DN-HNG	11,000	88	125	IP66	100 - 277V AC	5000K (cool white)	Tempered glass	Oval
Variable Dimming Models								
HEZGMC4PD-HNG	26,500	212	125	IP66	110 - 277V AC	5000K (cool white)	Tempered glass	Medium
HEZGMC4KD-HNG	18,000	144	125	IP66	100 - 277V AC	5000K (cool white)	Tempered glass	Medium
HEZGMC4GD-HNG	14,000	112	125	IP66	100 - 277V AC	5000K (cool white)	Tempered glass	Medium
HEZGMC4DD-HNG	11,000	88	125	IP66	100 - 277V AC	5000K (cool white)	Tempered glass	Medium

[1]All values typical unless otherwise stated. Lumen values are typical (tolerance + / - 10%)
[2]Models in part number table are in Cool White (5,000K CCT), for models needing Neutral White (4,000K CCT) replace the 6th character with a N. Example HEZGMC4PN-HNG becomes HEZGMN4PN-HNG. Deduct 8% from lumen values when specifying neutral white.
[3]For models needing a Safety Bracket replace the 11th character with a S. Example HEZGMC4PN-SNG becomes HEZGMC4PN-SSG
[4]All models in part number table come with an internal fuse. For models needing an external fuse replace the 11th character with a F. Example HEZGMC4PN-SNG becomes HEZGMC4PN-SFG. (Fixtures will be listed with damp location only with external fuse)
[5]For models needing both a Safety bracket and Fuse, replace the 11th character with a G. Example HEZGMC4PN-SNG becomes HEZGMC4PN-SGG.
[6]All models fitted with Type 1 style plug



HBXW3

- Aluminium swivel bracket



HBXGS

- Glare shield (interior use only, for use with flat lens options)



HBXSBDK

- Sand blast kit (dome lens)

HBXSBDL

- Sacrificial dome lens

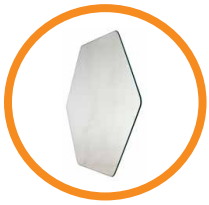

HBXLENGC

- Clear tempered glass

HBXLENPC

- Polycarbonate lens, clear

HBXLENAC

- Acrylic lens, clear

HBXW3 - Swivel Bracket Dimensions

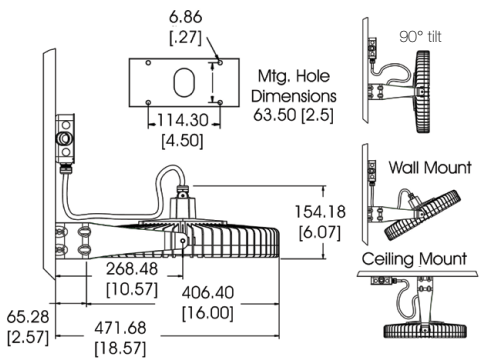

Dimension are in mm [inches]

Vigilant® H2 Series LED High Bay

for Industrial Applications



Ratings and Certifications
• CE (EN55015:2013, EN61547:2009, EN60598:2008)
• IEC60068 salt spray testing - severity 1
• IP66 to EN60529
• IK05 to EN50102
• NEMA 4X
• L70 rated for 150,000+ hours @ 25°C ambient
• 10yr full performance warranty

*All features not available on every model. Please refer to product part number pages for model specifics.

Mechanical Information	
Fixture weight:	8.16 kg (18 lbs)
Shipping weight:	10.8 kg (24 lbs)
Mounting:	Hook (supplied) or Swivel bracket (supplied separately)
Cabling:	3m (10') PVC Power Cord

Specifications			
Voltage options:	110 - 277V AC	**Housing:**	Copper free aluminium
Operating temp:	-40°C to +65°C (-40°F to +149°F)	**Lens:**	Tempered glass
Power factor:	>0.9	**CRI:**	75 (80 min. option available)
THD:	<20%	**CCT:**	5000K (cool white)
Surge protection:	Protection devices capable of handling up to 6kV. Tested for 6kV/2 ohm combination wave, as per IEEE C62.41, line-line and line-ground		

Comparison		
	Warranty	**L70**
Dialight High Bay	10yr	>150,000
Metal Halide	1	15,000
High Pressure Sodium	1	20,000

Lumens	Wattage	Lm/W	Mounting Heights
25,250	180	140	Up to 24m

Dimensions

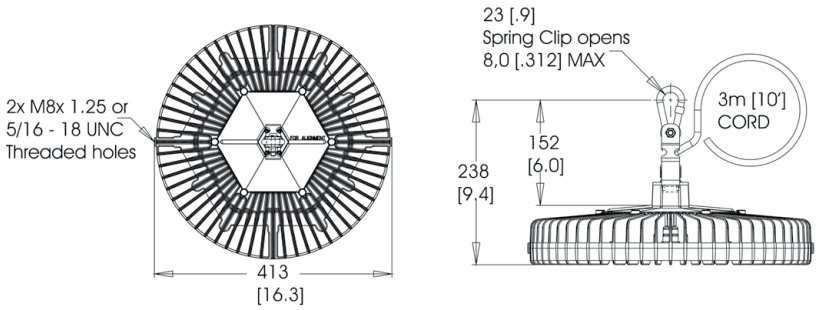

Dimension are in mm [inches]

Light Distribution Pattern

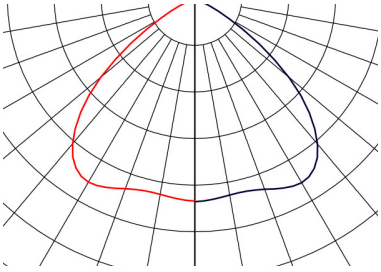

Medium Pattern

Mounting Options



Standard Hook



Swivel Bracket

Resources:
Datasheet: www.dialight.com/Assets/Brochures_And_Catalogs/Illumination/MDEXHBX001.pdf • Case Studies, IES Files, LM79 Reports: www.dialight.com

Vigilant® H2 Series LED High Bay

Ordering Information and Mounting Accessories

Part Number	Initial Fixture Lumens	Wattage	Lm/W	IP Rating	Voltage	Colour Temperature (CCT)	Lens	Light Distribution
Standard Models								
H2ZGMC4NN-HNG	25,250	180	140	IP66	110 - 277V AC	5000K (cool white)	Tempered glass	Medium
Variable Dimming Models								
H2ZGMC4ND-HNG	25,250	180	140	IP66	110 - 277V AC	5000K (cool white)	Tempered glass	Medium

[1]All values typical unless otherwise stated. Lumen values are typical (tolerance + / - 10%)



HBXW3
- Aluminium swivel bracket

HBXW3-SS
- Stainless steel swivel bracket



HBXGS
- Glare shield (interior use only, for use with flat lens options)



HBXSBDK
- Sand blast kit (dome lens)

HBXSBDL
- Sacrificial dome lens



HBXSBK
- Sand blast kit (flat lens)

HBXSBL
- Sacrificial flat lens

HBXW3 - Swivel Bracket Dimensions

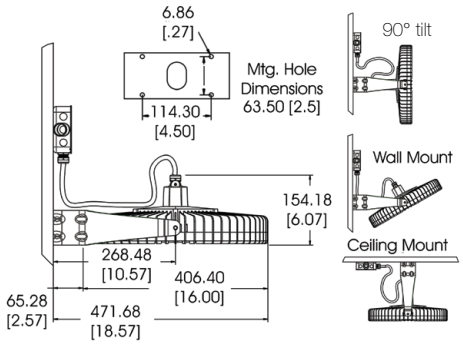

Standard Hook Dimensions

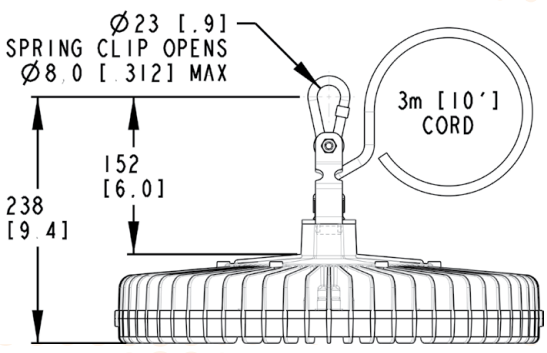

Vigilant® LED Dual Floodlight

for Industrial Applications

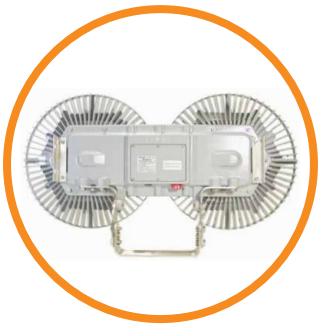



Ratings and Certifications
• CE (EN55015:2013, EN61547:2009, EN60598:2008)
• IEC62031, IEC62471
• IP66 to EN60529
• NEMA 4X
• L70 rated for 125,000+ hours @ 25°C ambient
• 10yr full performance warranty

*All features not available on every model. Please refer to product part number pages for model specifics.

Mechanical Information	
Fixture weight:	23 kg (56 lbs)
Shipping weight:	27 kg (60 lbs)
EPA (Sq.ft):	2.69
Mounting:	Stainless steel trunnion mounting bracket included
Entries:	(2) M20 cable entries

Specifications			
Voltage options:	120 – 277V AC, 50/60Hz	**Housing:**	Copper free aluminium
Operating temp:	-40°C to +65°C (-40°F to +149°F)	**Lens:**	Tempered glass
Power factor:	>0.9	**CRI:**	75 (80 min. option available)
THD:	<20%	**CCT:**	5000K (cool white)
Surge protection:	6kV/2 ohm combination wave, as per IEEE C62.41, line to line and line to ground		

Comparison		
	Warranty	**L70**
Dialight High Bay	10yr	>125,000
Metal Halide	1	15,000
High Pressure Sodium	1	20,000

Lumens	Wattage	Lm/W	Mounting Heights
55,000	424	130	30m
53,000	424	125	

Dimensions

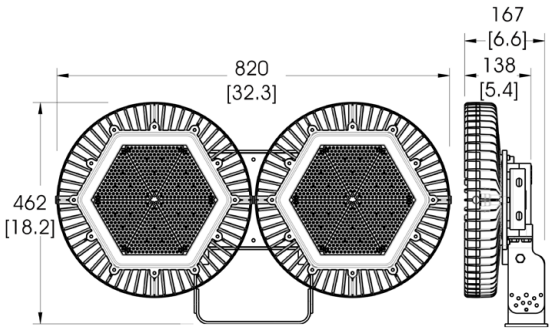

Dimension are in mm [inches]

Beam Angle

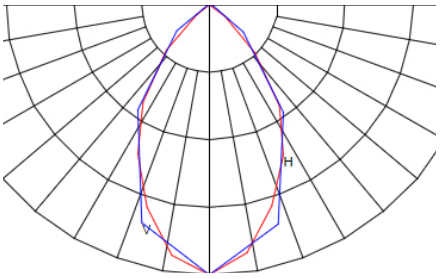

35° Beam Angle

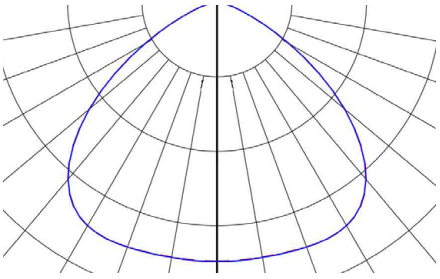

95° Beam Angle

Resources:
Datasheet: www.dialight.com/Assets/Brochures_And_Catalogs/Illumination/MDTEXVFLULX001.pdf • Case Studies, IES Files, LM79 reports: www.dialight.com

Vigilant® LED Dual Floodlight

Ordering Information and Mounting Accessories

Part Number	Initial Fixture Lumens	Wattage	Lm/W	IP Rating	Voltage	Colour Temperature (CCT)	Lens	Beam Angle
FLEB66MC2NG	55,000	424	130	IP66	120 - 277V AC	5000K (cool white)	Tempered glass	35°
FLEBM0MC2NG	53,000	424	125	IP66	120 - 277V AC	5000K (cool white)	Tempered glass	95°

[1]All values typical unless otherwise stated. Lumen values are typical (tolerance + / - 10%)
[2]Additional optics coming soon. Please consult factory for details.



HZXCBL2

- Safety cable kit
- (2) Safety cables

Dual Floodlight Mounting Options

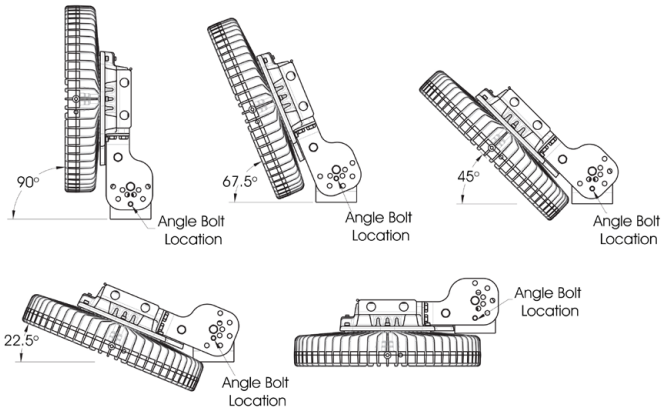

Factory Installed Mounting Bracket Dimensions

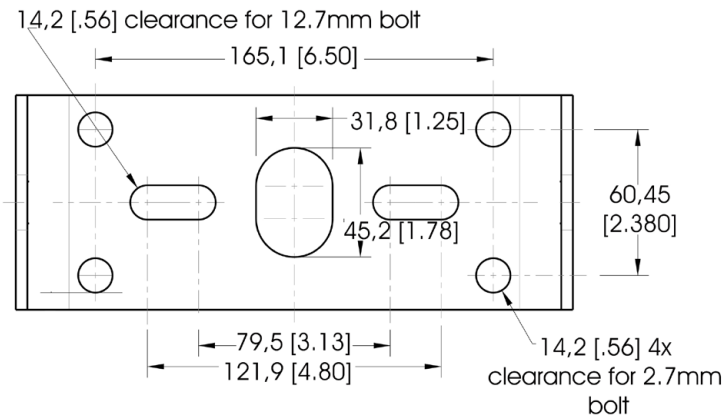

Dimension are in mm [inches]

Vigilant® LED Floodlight
for Industrial Applications



Ratings and Certifications
• CE (EN55015:2013, EN61547:2009, EN60598:2008)
• IP66 to EN60529
• NEMA 4X
• L70 rated for 125,000+ hours @ 25°C ambient
• 10yr full performance warranty

*All features not available on every model. Please refer to product part number pages for model specifics.

Mechanical Information	
Fixture weight:	13.5 kg (30 lbs)
Shipping weight:	18.5 kg (35 lbs)
Mounting:	304 Stainless steel forward throw bracket
Entries:	(2) M20 cable entries

Specifications			
Voltage options:	120 – 277V AC, 50/60Hz	**Housing:**	Copper free aluminium
Operating temp:	-40°C to +65°C (-40°F to +149°F)	**Lens:**	Tempered glass
Power factor:	>0.9	**CRI:**	75 (80 min. option available)
THD:	<20%	**CCT:**	5000K (cool white)
Surge protection:	6kV/2 ohm combination wave, as per IEEE C62.41, line-to-line and line-to-ground		

Comparison		
	Warranty	**L70**
Dialight High Bay	10yr	>125,000
Metal Halide	1	15,000
High Pressure Sodium	1	20,000

Lumens	Wattage	Lm/W	Mounting Heights
27,500	212	125	15m

Dimensions

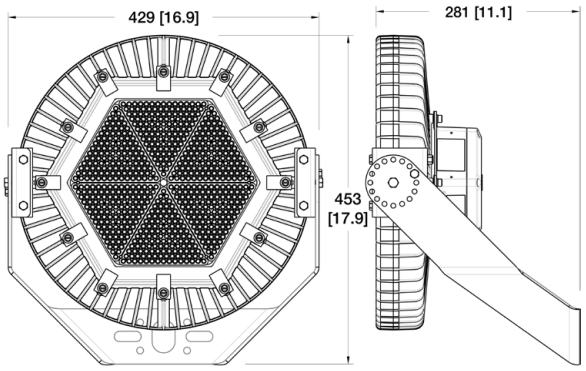

Dimension are in mm [inches]

Beam Angle

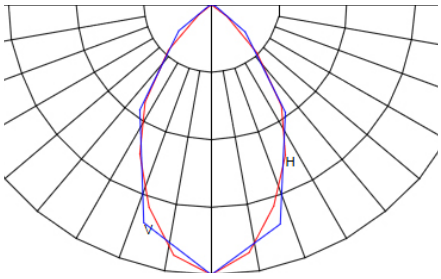

35° Beam Angle

Resources:
Datasheet: www.dialight.com/Assets/Brochures_And_Catalogs/Illumination/MDTEXVFLULX001.pdf • Case Studies, IES Files, LM79 reports: www.dialight.com

Vigilant® LED Floodlight

Ordering Information and Mounting Accessories

Part Number	Initial Fixture Lumens	Wattage	Lm/W	IP Rating	Voltage	Colour Temperature (CCT)	Lens	Beam Angle
FLE666HC2NG	27,500	212	125	IP66	120 - 277V AC	5000K (cool white)	Tempered glass	35°

[1]All values typical unless otherwise stated. Lumen values are typical (tolerance + / - 10%)
[2]Additional NEMA optics coming soon. Please consult factory for details.



HZXCBL2

- Safety cable kit
- (2) Safety cables



FLX1HBXSS

- 304 Stainless steel forward throw bracket (included)

Single Floodlight - Factory Installed Mounting Bracket Dimensions

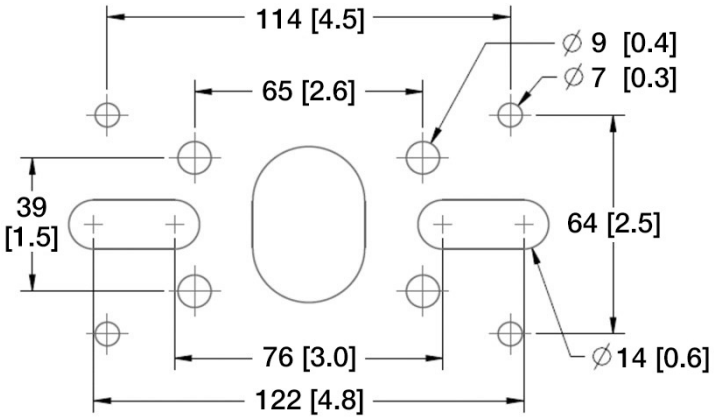

Dimension are in mm [inches]

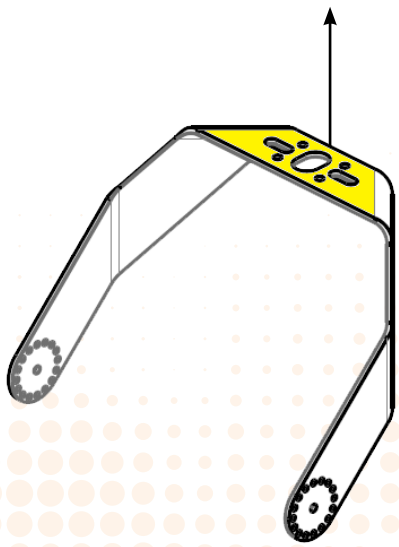

Vigilant® LED High Bay with DALI Controls

for Industrial Applications



Ratings and Certifications

- CE (EN61547:2009, EN60598:2008, EN62471:2008, EN55015:2006)
- IEC60068 salt spray testing - severity 1
- IP66 to EN60529
- IK05 to EN50102 (Glass lens)
- L70 rated for 150,000+ hours @ 25°C ambient
- 10yr full performance warranty

*All features not available on every model. Please refer to product part number pages for model specifics.

Mechanical Information

Fixture weight:	8.16 kg (18 lbs)
Shipping weight:	10.8 kg (24 lbs)
Mounting:	Hook or Swivel bracket (supplied separately)
Cabling:	3.05m (10') STOOW Power Cord

Specifications

Voltage options:			
110 – 277V AC	26,500lm models	**Housing:**	Copper free aluminium
100 – 277V AC	18,000, 14,000 & 11,000lm models	**Lens:**	Tempered glass
Operating temp:	-40°C to +65°C (-40°F to +149°F)	**CRI:**	75
Power factor:	>0.9	**CCT:**	5000K (cool white)
THD:	<20%		4000K (neutral white)
Surge protection:	Protection devices capable of handling up to 6kV. Tested for 6kV/2 ohm combination wave, as per IEEE C62.41, line-line and line-ground		

LED High Bay Dimensions

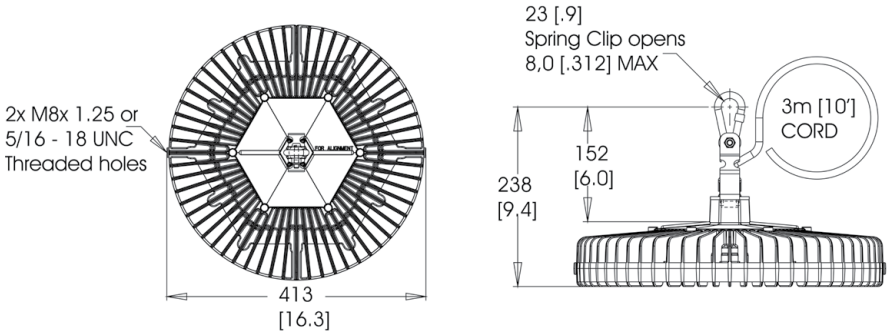

Dimension are in mm [inches]

Light Distribution Pattern

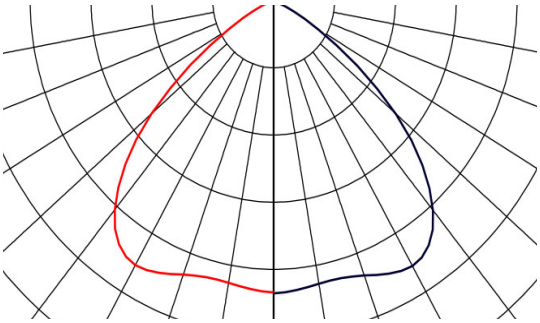

Medium Pattern

Resources:
Datasheet: www.dialight.com/Assets/Brochures_And_Catalogs/Illumination/MDEXHBX001.pdf • Case Studies, IES Files, LM79 Reports: www.dialight.com

Vigilant® LED High Bay with DALI Controls

Ordering Information and Mounting Accessories

Part Number	Initial Fixture Lumens	Wattage	LPW	IP Rating	Voltage	Colour Temperature (CCT)	Lens	Light Distribution
Vigilant LED High Bay - Jennet 2.4GHz								
HEZGMC4PJ-HNG	26,500	213	124	IP66	110 - 277V AC	5000K (cool white)	Tempered glass	Medium
HEZGMC4KJ-HNG	18,000	145	124	IP66	100 - 277V AC	5000K (cool white)	Tempered glass	Medium
Vigilant LED High Bay - DALI Protocol								
HEEGMC4PA-HNG	26,500	213	124	IP66	110 - 277V AC	5000K (cool white)	Tempered glass	Medium
HEEGMC4KA-HNG	18,000	145	124	IP66	100 - 277V AC	5000K (cool white)	Tempered glass	Medium

[1]All values typical unless otherwise stated. Lumen values are typical (tolerance + / - 10%)
[2]Part numbers in table above are in cool white (5000K CCT). For models needing neutral white (4,000K CCT), replace the 5th character with an **N**. Example: HEZGM**C**4PN-HNG becomes HEZGM**N**4PN-HNG. Deduct 8% from lumen values when specifying neutral.
[3]For models needing Safety Bracket replace the 10th character with an **S**. Example: HEZMC4PN-S**N**G becomes HEZMC4PN-S**S**G



HBXW3
- Aluminium swivel bracket

HBXW3-SS
- Stainless steel swivel bracket



HBXGS
- Glare shield (interior use only, for use with flat lens options)



HBXSBDK
- Sand blast kit (dome lens)

HBXSBDL
- Sacrificial dome lens

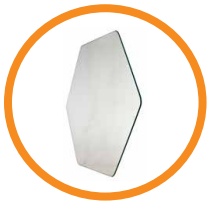

HBXLENGC
- Clear tempered glass

HBXLENPC
- Polycarbonate lens, clear

HBXLENAC
- Acrylic lens, clear

*Accessories for LED High Bay

Wireless Occupancy Sensor
for Industrial Applications



Ratings and Certifications
• CE
• IP66
• 5yr full performance warranty

*All features not available on every model. Please refer to product part number pages for model specifics.

Mechanical Information	
Fixture weight:	283 g (10 oz)
Shipping weight:	510 g (18 oz)
Mounting:	Mounting plate (comes with sensor)
Dimension:	127mm (5") D x 63.5mm (2.5") H

Specifications			
Voltage options:	3.3V via 2 - AA lithium batteries (inlcuded)	**Housing:**	UV stabilized polycarbonate
Operating temp:	-40°C to +65°C (-40°F to +149°F)	**Lens:**	Fresnel
Power factor:	>0.9	**Finish:**	Grey
THD:	<20%		
Surge protection:	1 kV line to line, 2 kV line to ground		

Sensors
• Fully compatible with Dialight WLC-004-MBAL Gateway
• Separate mounting base for easy installation
• Sense motion up to: 30 meters at an angle of 10°

Dimensions

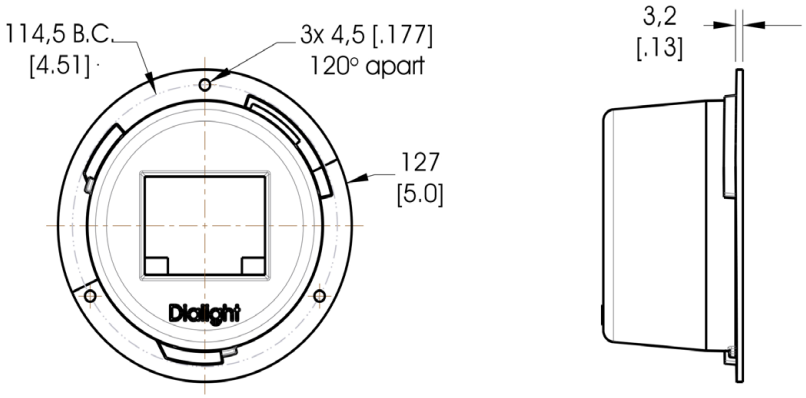

Dimension are in mm [inches]

Resources:
Datasheet: www.dialight.com/Assets/Brochures_And_Catalogs/Illumination/MDEXHBX001.pdf • Case Studies, IES Files, LM79 Reports: www.dialight.com

Wireless Occupancy Sensor

Ordering Information and Mounting Accessories

Part Number	IP Rating	Voltage	Lens	Beam Range
WOSU12BG	IP66 / 67	3.3V via 2 - AA Lithium batteries	Fresnel	Long range

[1]All values typical unless otherwise stated. Lumen values are typical (tolerance + / - 10%)
[2]Used with Dialight wall controller model WLC-004-MBAL, please see page 23 for wall controller information.

Mounting Options

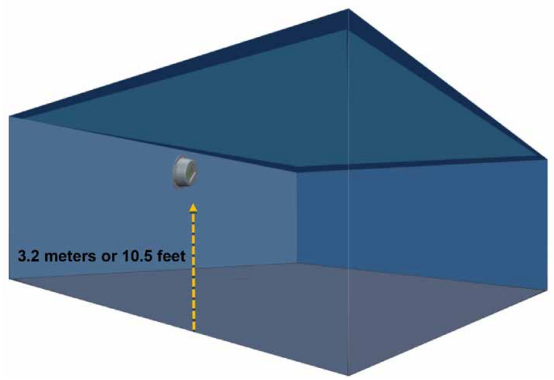

The long range sensor is best used as a wall mounted sensor. The recommended install for this sensor is 3.2 meters or 10.5 feet from the floor

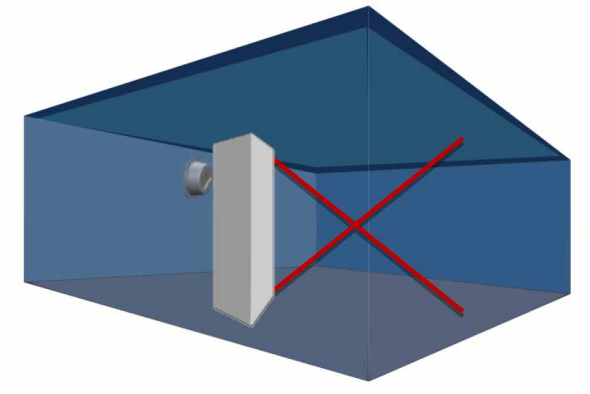

Avoid placing sensors where obstacles can block the sensors line of sight

DuroSite® LED Low Bay
for Industrial Applications



Ratings and Certifications
• CE (EN61547:2009, EN60598:2008, EN55015:2006)
• IP66 to EN60529
• IK10 to EN50102
• RoHS compliant
• L70 rated for 150,000+ hours @ 25°C ambient
• 5yr full performance warranty

*All features not available on every model. Please refer to product part number pages for model specifics.

Mechanical Information	
Fixture weight:	8.2 kg (18 lbs)
Mounting:	Hook or
	Swivel bracket (supplied separately)
Fixing:	Factory installed 3 meter PVC cable with plugtop

Specifications			
Voltage options:	100 - 277V AC	**Housing:**	Copper free aluminium
Operating temp:	-40°C to +65°C (-40°F to +149°F)	**Lens:**	Polycarbonate
Power factor:	>0.9	**CRI:**	>70
THD:	<15%	**CCT:**	5000K (cool white)
Surge protection:	EN61000-4-5 1 kV line to line, 2 kV line to ground		4500K (neutral white)

Comparison		
	Warranty	**L70**
Dialight Low Bay	5yr	>150,000
Metal Halide	1	15,000
High Pressure Sodium	1	20,000

Lumens	Wattage	Lm/W	Mounting Heights
6,000	80	75	6m and lower

Dimensions

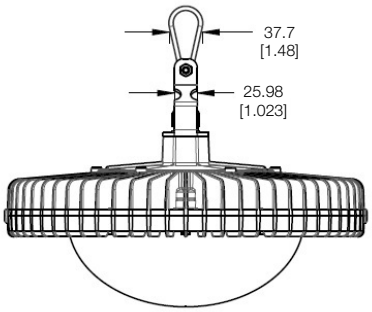

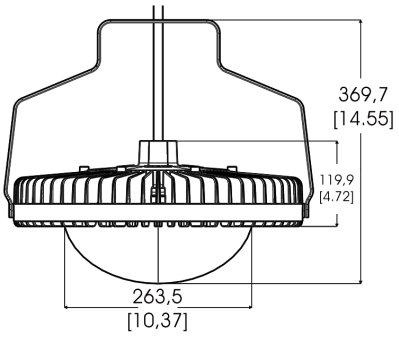

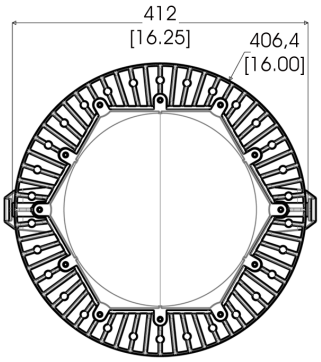

Dimension are in mm [inches]

Light Distribution Pattern

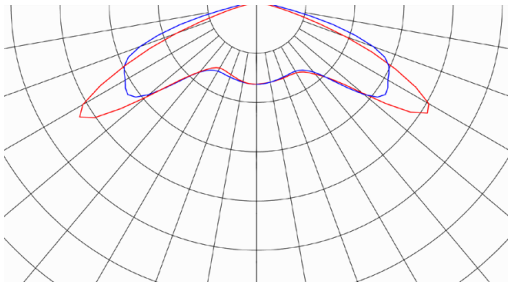

Wide Pattern

Resources:
Datasheet: www.dialight.com/Assets/Brochures_And_Catalogs/Illumination/MDEXLBX001.pdf • Case Studies, IES Files, LM79 Reports: www.dialight.com

DuroSite® LED Low Bay

Ordering Information and Mounting Accessories

Part Number	Initial Fixture Lumens	Wattage	Lm/W	IP Rating	Voltage	Colour Temperature (CCT)	Lens	Light Distribution
LBW1C1D-AUH	6,000	80	75	IP66	100 - 277V AC	5000K (cool white)	Diffused dome polycarbonate	Wide

[1]All values typical unless otherwise stated. Lumen values are typical (tolerance + / - 10%)



Hook

- Included as standard



HBXW3

- Aluminium swivel bracket

HBXW3-SS

- Stainless steel swivel bracket

DuroSite® LED Floodlight
for Industrial Applications



Patent pending

Ratings and Certifications

- CE (EN61547, EN60598-1, EN55015, EN61000-3-2, EN62031, EN62471)
- IP66 / 67 to EN60529
- IK07
- L70 rated for 100,000+ hours @ 25°C ambient
- 10yr full performance warranty

*All features not available on every model. Please refer to product part number pages for model specifics.

Mechanical Information

Fixture weight:	
15,000 - 13,500 lm:	14 kg (30 lbs)
11,500 - 10,750 lm:	12 kg (27 lbs)
Shipping weight:	
15,000 - 13,500 lm:	15.5 kg (34 lbs)
11,500 - 10,750 lm:	14 kg (31 lbs)
Mounting:	304 Stainless steel trunnion mounting bracket included
Entry:	(2) M20 cable entries

Specifications

Voltage options:	100 - 277V AC, 50/60Hz	**Housing:**	Copper free aluminium
Operating temp:	-40°C to +65°C (-40°F to +149°F)	**Lens:**	Tempered glass
Power factor:	>0.9	**CRI:**	75
THD:	<20%	**CCT:**	5000K (cool white)
Surge protection:	6kV line to line, line to ground		

Dimensions

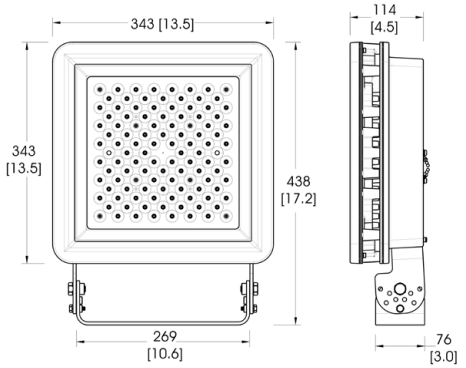

Dimension are in mm [inches]

Lumens	Wattage	Lm/W	Mounting Heights
15,000	130	115	12m
14,750	130	113	
13,000	140	105	
11,500	109	105	
11,250	109	103	
11,000	109	101	
10,750	109	99	
10,500	109	96	

Comparison

	Warranty	L70
Dialight Floodlight	10yr	>100,000
Metal Halide	1	15,000
High Pressure Sodium	1	20,000

Light Distribution Pattern

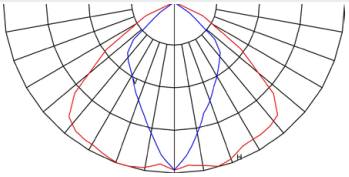

Beam angle = 105° x 70°

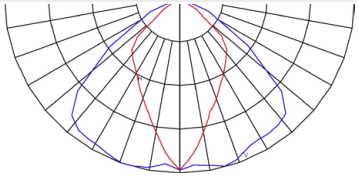

Beam angle = 70° x 105°

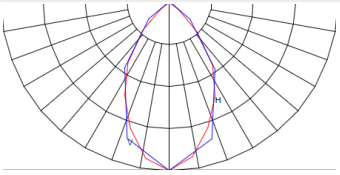

Beam angle = 45°

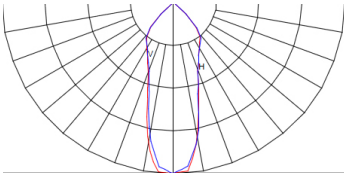

Beam angle = 27°

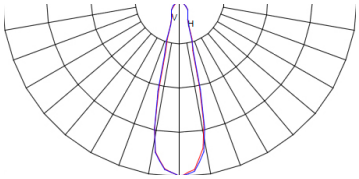

Beam angle = 26°

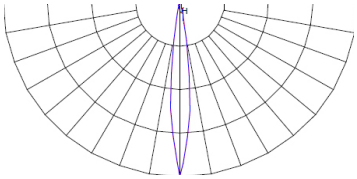

Beam angle = 12°

Resources:
Datasheet: www.dialight.com/Assets/Brochures_And_Catalogs/Illumination/MDTEXDSFLEUX001.pdf • Case Studies, IES Files, LM79 Reports: www.dialight.com

DuroSite® LED Floodlight

Ordering Information and Mounting Accessories

Part Number	Initial Fixture Lumens	Wattage	Lm/W	IP Rating	Voltage	Colour Temperature (CCT)	Lens	Beam Angle	Field Angle
FLE466MC4NG	15,000	130	115	IP66 / 67	100 - 277V AC	5000K (cool white)	Clear Tempered Glass	45°	115°
FLE476MC4NG	14,750	130	113	IP66 / 67	100 - 277V AC	5000K (cool white)	Clear Tempered Glass	105° x 70°	140° x 115°
FLE467MC4NG	14,750	130	113	IP66 / 67	100 - 277V AC	5000K (cool white)	Clear Tempered Glass	70° x 105°	115° x 140°
FLE455MC4NG	14,500	140	104	IP66 / 67	100 - 277V AC	5000K (cool white)	Clear Tempered Glass	27°	93°
FLE444MC4NG	14,500	140	104	IP66 / 67	100 - 277V AC	5000K (cool white)	Clear Tempered Glass	26°	52°
FLE422MC4NG	13,500	140	96	IP66 / 67	100 - 277V AC	5000K (cool white)	Clear Tempered Glass	12°	23°
FLE276MC2NG	11,500	109	105	IP66 / 67	100 - 277V AC	5000K (cool white)	Clear Tempered Glass	45°	115°
FLE267MC2NG	11,500	109	105	IP66 / 67	100 - 277V AC	5000K (cool white)	Clear Tempered Glass	105° x 70°	140° x 115°
FLE266MC2NG	11,250	109	103	IP66 / 67	100 - 277V AC	5000K (cool white)	Clear Tempered Glass	70° x 105°	115° x 140°
FLE255MC2NG	11,000	109	101	IP66 / 67	100 - 277V AC	5000K (cool white)	Clear Tempered Glass	27°	93°
FLE244MC2NG	10,500	109	96	IP66 / 67	100 - 277V AC	5000K (cool white)	Clear Tempered Glass	26°	52°
FLE222MC2NG	10,750	109	99	IP66 / 67	100 - 277V AC	5000K (cool white)	Clear Tempered Glass	12°	23°

[1]All values typical unless otherwise stated. Lumen values are typical (tolerance + / - 10%)







Product shipped with bracket installed
(Bracket has locking positions at 0°, (±) 22.5°, (±) 45°, (±) 67.5°, and 90°)



HZXSAFECBLS

- Safety cable kit
- (2) Safety cables

Factory Installed Mounting Bracket

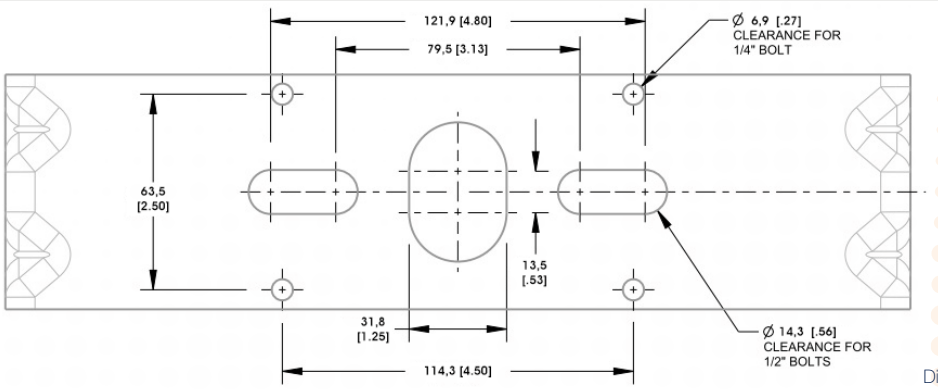

Dimension are in mm [inches]

DuroSite® LED End-to-End Linear Fixture

for Industrial Applications



Ratings and Certifications

- CE (EN61547, EN60598-2-1, EN55015, EN61347, EN61000-3-2, EN62031, EN62471)
- IP66 / 67
- NEMA 4X
- L70 rated for 125,000+ hours @ 25ºC ambient
- 5yr full performance warranty

*All features not available on every model. Please refer to product part number pages for model specifics.

Mechanical Information

Fixture weight:	
1,30m:	8.16 kg (18 lbs)
687,4mm:	5.90 kg (13 lbs)
Shipping weight:	
1,30m:	9.07 kg (20 lbs)
687,4mm:	6.80 kg (15 lbs)
Mounting:	(4) M25 openings Factory-installed 316 stainless steel ceiling mount

Specifications

Voltage options:	100 - 277V AC	**Housing:**	Extruded 6063 aluminium
Operating temp:	-40°C to +65°C (-40°F to +149°F)	**Lens:**	Polycarbonate
Power factor:	>0.9	**CRI:**	80
THD:	<20%	**CCT:**	5000K (cool white) 4000K (neutral white)
Surge protection:	EN 61000-4-5 6kV line to line, line to ground		

Comparison

	Warranty	L70
Dialight Floodlight	10yr	>125,000
Metal Halide	1	15,000
High Pressure Sodium	1	20,000

Lumens	Wattage	Lm/W	Mounting Heights
7,500	60	125	
6,750	60	125	↓
4,000	32	125	
3,500	32	125	

Dimensions

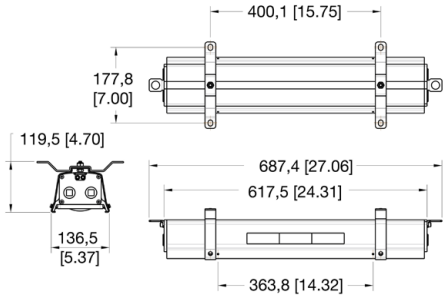

2' End-to-End

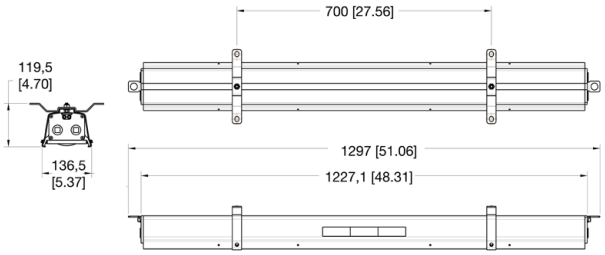

4' End-to-End

Dimension are in mm [inches]

Light Distribution Pattern

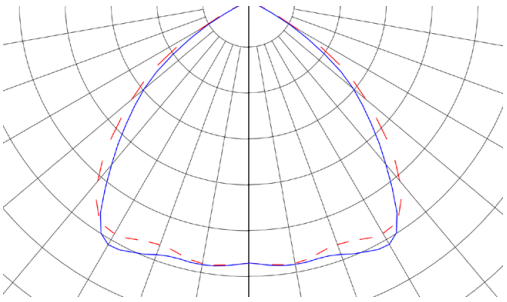

Clear Lens

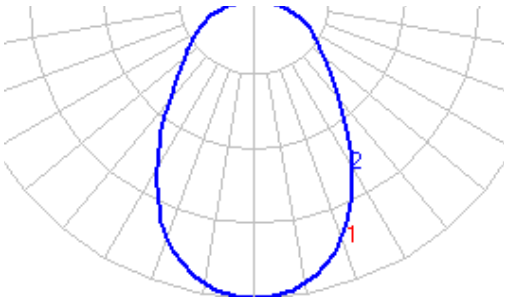

Diffused Lens

Resources:
Datasheet: www.dialight.com/Assets/Brochures_And_Catalogs/Illumination/MDEXLINE2EEUX001.pdf • Case Studies, IES Files, LM79 Reports: www.dialight.com

DuroSite® LED End-to-End Linear Fixture

Ordering Information and Mounting Accessories

Part Number	Length	CRI	Fixture Lumen	Watt	LPW	Voltage	CCT	Lens	Optical Pattern
LBE2MB3FNANNGN	1,30m	80	7,500	60	125	120 - 277 V AC	5000K (cool white)	Clear polycarbonate	Circular
LBE6MB3FNANNGN	1,30m	80	6,750	60	112	120 - 277 V AC	5000K (cool white)	Diffused polycarbonate	Circular
LAE2MB3BNANNGN	687,4mm	80	4,000	32	125	120 - 277 V AC	5000K (cool white)	Clear polycarbonate	Circular
LAE6MB3BNANNGN	687,4mm	80	3,500	32	109	120 - 277 V AC	5000K (cool white)	Diffused polycarbonate	Circular

All lumen values are typical (tolerance +/- 10%)
Part numbers listed in the above table are cool white. For neutral white models, please replace the 6th character with **N**. Ex. LBE2M**B**3FNANNGN becomes LBE2M**N**3FNANNGN.
For factory-installed flush mount, please replace the 10th character with **F**. Ex. LBE2MB3FN**A**NNGN becomes LBE2MN3FN**F**NNGN.
For factory-installed swivel mount, please replace the 10th character with **S**. Ex. LBE2MB3FN**A**NNGN becomes LBE2MN3FN**S**NNGN.

Swivel Mount

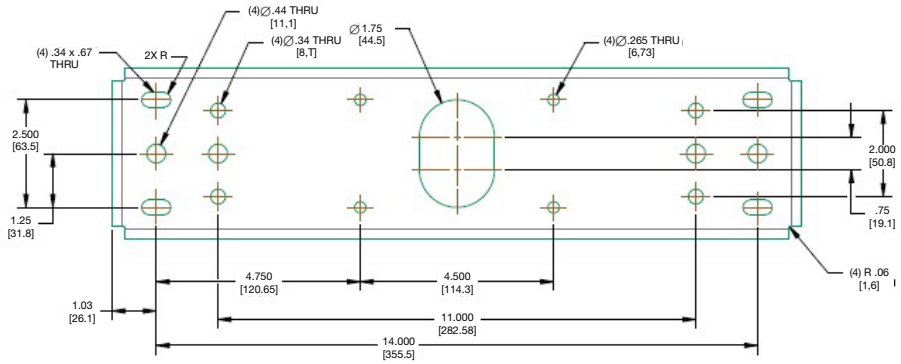



EEX-S6

- 316 Stainless steel swivel mounting bracket
- Can be angled at 0°, 30°, 45°, 60°, and 90°



Ceiling Mount



EEX-C6

- 316 Stainless steel fixed ceiling mount



Flush Mount



EEX-F6

- 316 Stainless steel flush mount

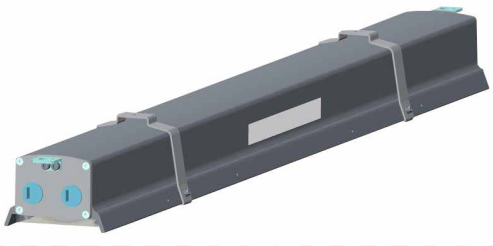

Dimension are in mm [inches]

DuroSite® LED Linear - Low Profile

for Industrial Applications



Ratings and Certifications

- CE (EN61547, EN60598-1, EN55015, EN61000-3-2, EN62031, EN62471)
- IP66 / 67
- L70 rated for 100,000+ hours @ 25°C ambient
- 5yr full performance warranty

*All features not available on every model. Please refer to product part number pages for model specifics.

Mechanical Information

Fixture weight:	1.2 m (4') - 6 kg (13 lbs) 0.6 m (2') - 5 kg (10 lbs)
Shipping weight:	1.2 m (4') - 10 kg (18 lbs) 0.6 m (2') - 9 kg (15 lbs)
Mounting:	(4) M25 openings Factory-installed 316 stainless steel swivel bracket - LPXW4

Specifications

Voltage options:	120 - 277V AC, 50/60Hz	**Housing:**	Powder coated aluminium
Operating temp:	-40°C to +65°C (-40°F to +149°F)	**Lens:**	Polycarbonate
Power factor:	>0.9	**CRI:**	75
THD:	<20%	**CCT:**	5000K (cool white)
Surge protection:	EN 61000-4-5 4 kV line to line, 4 kV line to ground		

Comparison

	Warranty	L70
Dialight Linear	5yr	>100,000
Fluorescent	1	24,000

Lumens	Wattage	Lm/W	Mounting Heights
7,250	66	110	6m
6,700	66	102	↕
3,500	33	106	↕
3,300	33	100	3m

Dimensions

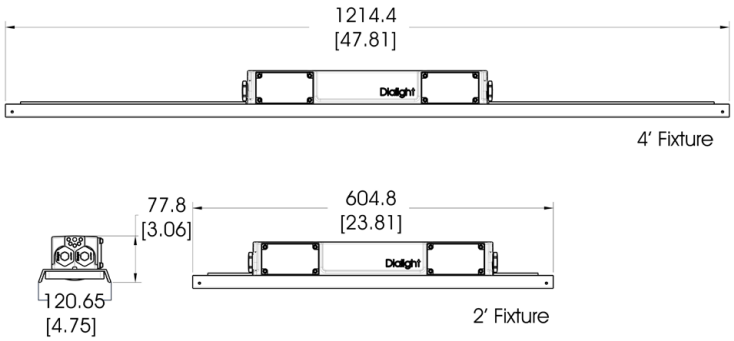

Dimension are in mm [inches]

Light Distribution Pattern

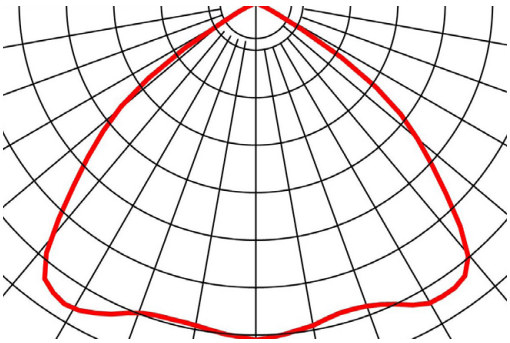

Medium Pattern

Mounting Options

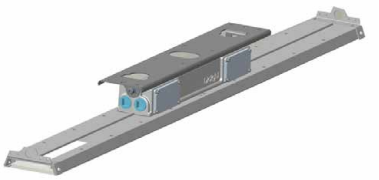

Low ProfileTop Mount - LPXW4LP

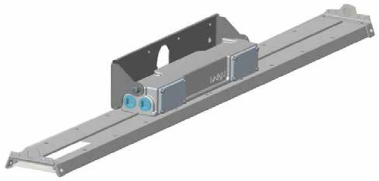

Side Mount - LPXW4 (included)

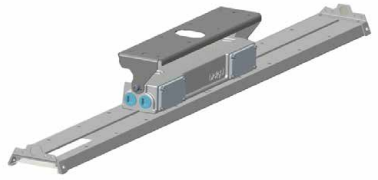

Top Mount - LPXW4 (included)

Resources:
Datasheet: www.dialight.com/Assets/Brochures_And_Catalogs/Illumination/MDTDLINX001.pdf • Case Studies, IES Files, LM79 Reports: www.dialight.com/Document/Index/712

DuroSite® LED Linear - Low Profile

Ordering Information and Mounting Accessories

Part Number	Initial Fixture Lumens	Wattage	Lm/W	IP Rating	Voltage	Colour Temperature (CCT)	Lens	Light Distribution	Length
LPE3C4M2P	7,250	66	110	IP66/67	120 - 277V AC	5000K (cool white)	Clear	Medium	1.2m (4')
LPE3C4D2P	3,500	33	106	IP66/67	120 - 277V AC	5000K (cool white)	Clear	Medium	0.6m (2')
LPE3C4H2W	6,700	66	102	IP66/67	120 - 277V AC	5000K (cool white)	Diffused	Medium	1.2m (4')
LPE3C4B2W	3,300	33	100	IP66/67	120 - 277V AC	5000K (cool white)	Diffused	Medium	0.6m (2')

[1]All values typical unless otherwise stated. Lumen values are typical (tolerance + / - 10%)
[2]Part numbers listed in the above table are cool white. For neutral white model replace the 5th character with **N**. Ex. LPE3**C**4D2P becomes LPE3**N**4D2P. Deduct 8% from lumen values when specifying neutral.



LPXW4LP

- Low profile mounting bracket, can be angled at 0° and 15°



LPXW4 (included)

- Mounting bracket, can be angled at 0°, 30°, 45°, 60°, & 90°



LTXENDCAPKIT

- Chain mount and secondary retention bracket



LTXSAFEKIT

- Safety cable kit for secondary retention

LPXW4 Mounting Bracket Dimensions

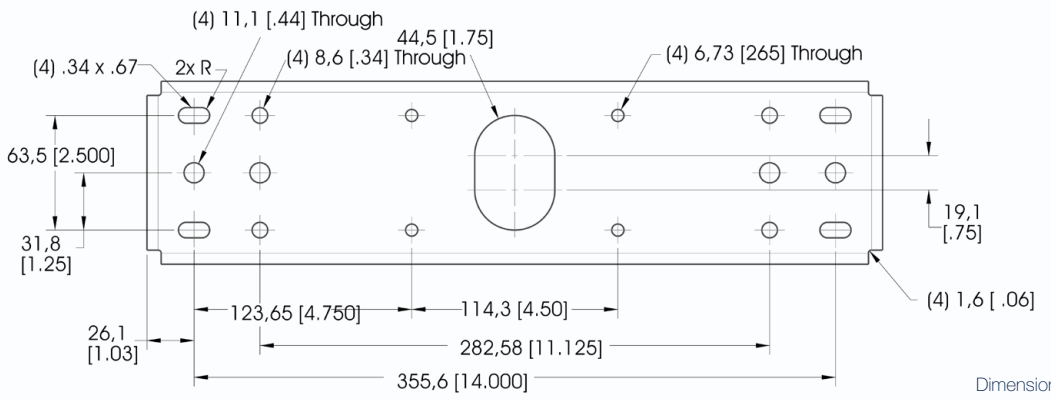

Dimension are in mm [inches]

DuroSite® LED Stainless Steel Linear

for Industrial Applications



Ratings and Certifications
• CE (EN61547:2009, EN60598:2008, EN55015:2006)
• IP66 / 67 to EN60529
• IK09 to EN50102
• L70 rated for 150,000+ hours @ 25°C ambient
• 5yr full performance warranty

*All features not available on every model. Please refer to product part number pages for model specifics.

Mechanical Information	
Fixture weight:	1308mm - 11.4 kg (25.1lbs) 708mm - 6.5 kg (15 lbs)
Shipping weight:	1308mm - 14.2 kg (31.3lbs) 708mm - 9.1 kg (20 lbs)
Mounting:	(2) M8 fixing points
Cable Entry:	2 x M20 cable entries at both ends, through wired as standard. Consult factory for other options.

Specifications			
Voltage options:	100 - 277V AC	**Housing:**	316 Marine grade stainless steel
Operating temp:	-20°C to +60°C	**Lens:**	High impact resistant polycarbonate
Power factor:	>0.9	**CRI:**	70
THD:	<15%	**CCT:**	5000K (cool white)
Surge protection:	EN 61000-4-5 1 kV line to line, 2 kV line to ground		

Comparison		
	Warranty	**L70**
Dialight Linear	5yr	>150,000
Fluorescent	1	24,000

Lumens	Wattage	Lm/W	Mounting Heights
5,100	64	86	6m
			↕
2,600	32	86	3m

Dimensions

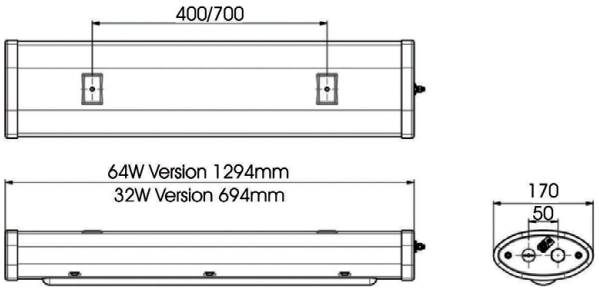

Dimension are in mm

Light Distribution Pattern

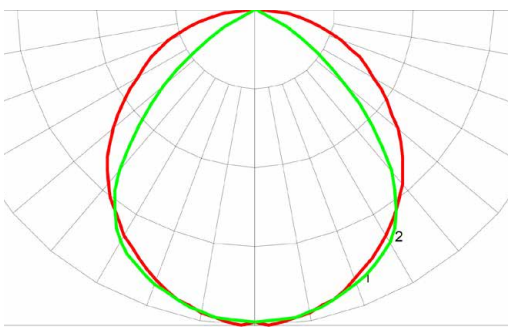

Circular Pattern

Resources:
Datasheet: www.dialight.com/Assets/Brochures_And_Catalogs/Illumination/MDTFSFSHZLDSEUX001.pdf • Case Studies, IES Files, LM79 Reports: ww.dialight.com/Document/Index/712

DuroSite® LED Stainless Steel Linear

Ordering Information and Mounting Accessories

Part Number	Initial Fixture Lumens	Wattage	Lm/W	IP Rating	Voltage	Colour Temperature (CCT)	Lens	Light Distribution
EL-1C3R-SSCB	5,100	64	86	IP66/67	100 - 277V AC	5000K (cool white)	Polycarbonate	Circular
EL-1C3M-SSCB	2,600	32	86	IP66/67	100 - 277V AC	5000K (cool white)	Polycarbonate	Circular

[1]All values typical unless otherwise stated. Lumen values are typical (tolerance + / - 10%)



ELXCMBSS

- 316 Marine Grade stainless steel ceiling mount kit



ELXPCSS40

- 40Ø - 45mm range 316 Marine Grade stainless steel pole clamp

ELXPCSS47

- 47Ø - 51mm range 316 Marine Grade stainless steel pole clamp

ELXPCSS54

- 54Ø - 57mm range 316 Marine Grade stainless steel pole clamp

ELXPCSS59

- 59Ø - 62mm range 316 Marine Grade stainless steel pole clamp



ELXWMBSS30

- 30° 316 Marine Grade stainless steel wall mount kit

ELXWMBSS45

- 45° 316 Marine Grade stainless steel wall mount kit

ELXWMBSS60

- 60° 316 Marine Grade stainless steel wall mount kit

ELXWMBSS90

- 90° 316 Marine Grade stainless steel wall mount kit



ELXEYESS

- 316 Marine Grade stainless steel eyelet kit

Mounting Options

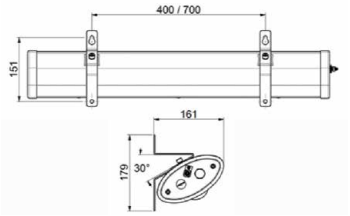

Wall Mount Bracket 30°

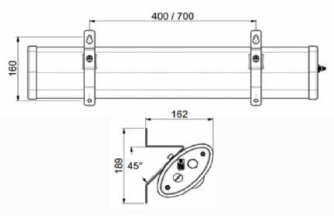

Wall Mount Bracket 45°

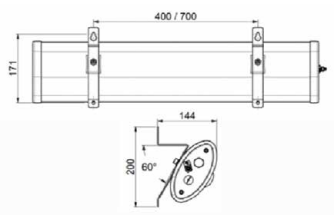

Wall Mount Bracket 60°

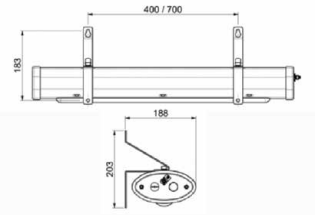

Wall Mount Bracket 90°

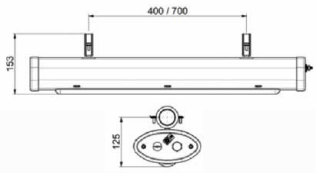

Pole Clamp

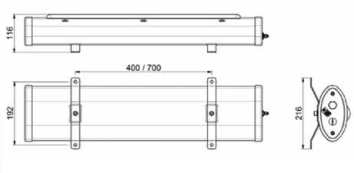

Ceiling Mount

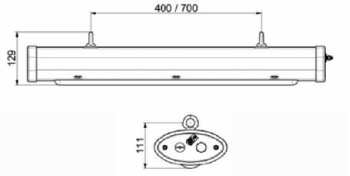

Eyelet

DuroSite® LED Stainless Steel Linear - Battery Backup

for Industrial Applications



Battery Information	
Battery:	3.6V 10Ah NiMH
Expected life:	4 years
Duration:	> 180 minutes

Ratings and Certifications
• CE (EN61547:2009, EN60598:2008, EN55015:2006)
• IP66 / 67 to EN60529
• IK09 to EN50102
• L70 rated for 150,000+ hours @ 25°C ambient
• 5yr full performance warranty

*All features not available on every model. Please refer to product part number pages for model specifics.

Mechanical Information	
Fixture weight:	1450 mm - 14.2 kg (31 lbs) 850 mm - 8.8 kg (20 lbs)
Shipping weight:	1450 mm - 17.2 kg (38 lbs) 850 mm - 11 kg (25 lbs)
Mounting:	(2) M8 fixing points
Cable Entry:	2 x M20 cable entries at both ends, through wired as standard. Consult factory for other options.

Specifications			
Voltage options:	230 / 240V AC	**Housing:**	316 Marine grade stainless steel
Operating temp:	-20°C to +60°C	**Lens:**	High impact resistant polycarbonate
Power factor:	>0.9	**CRI:**	70
THD:	<20%	**CCT:**	5000K (cool white)
Surge protection:	EN 61000-4-5 1 kV line to line, 2 kV line to ground		

Comparison		
	Warranty	**L70**
Dialight Linear	5yr	>150,000
Fluorescent	1	24,000

Lumens	Wattage	Lm/W	Mounting Heights
5,100	67	73	6m
			↕
2,600	34	74	3m

Dimensions

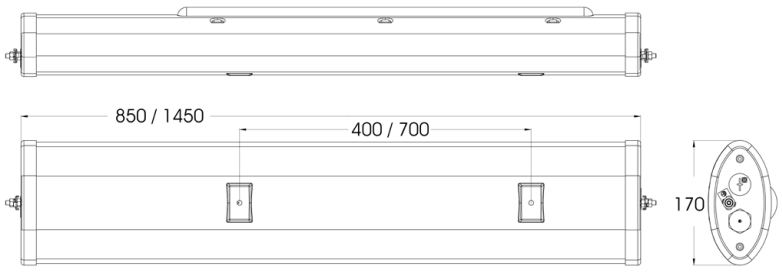

Dimension are in mm

Light Distribution Pattern

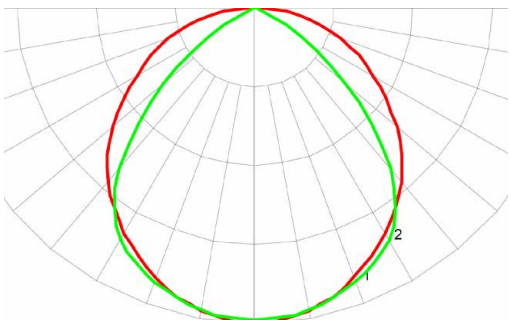

Circular Pattern

Resources:
Datasheet: www.dialight.com/Assets/Brochures_And_Catalogs/Illumination/MDTFSFSHZLDSEUX001.pdf • Case Studies, IES Files, LM79 Reports: ww.dialight.com/Document/Index/712

DuroSite® LED Stainless Steel Linear - Battery Backup

Ordering Information and Mounting Accessories

Part Number	Initial Fixture Lumens	Wattage	Lm/W	IP Rating	Voltage	Colour Temperature (CCT)	Lens	Light Distribution
ELE-2C4R-SSCB	5,100	67	73	IP66/67	230 / 240V AC	5000K (cool white)	Polycarbonate	Circular
ELE-2C4M-SSCB	2,600	34	74	IP66/67	230 / 240V AC	5000K (cool white)	Polycarbonate	Circular

[1]All values typical unless otherwise stated. Lumen values are typical (tolerance + / - 10%)



ELXCMBSS
- 316 Marine Grade stainless steel ceiling mount kit



ELXEYESS
- 316 Marine Grade stainless steel eyelet kit



ELX-BATT-KIT
- 3.6V 10Ah NiMH battery kit



ELXPCSS40
- 40Ø - 45mm range 316 Marine Grade stainless steel pole clamp

ELXPCSS47
- 47Ø - 51mm range 316 Marine Grade stainless steel pole clamp

ELXPCSS54
- 54Ø - 57mm range 316 Marine Grade stainless steel pole clamp

ELXPCSS59
- 59Ø - 62mm range 316 Marine Grade stainless steel pole clamp



ELXWMBSS30
- 30° 316 Marine Grade stainless steel wall mount kit

ELXWMBSS45
- 45° 316 Marine Grade stainless steel wall mount kit

ELXWMBSS60
- 60° 316 Marine Grade stainless steel wall mount kit

ELXWMBSS90
- 90° 316 Marine Grade stainless steel wall mount kit

Mounting Options

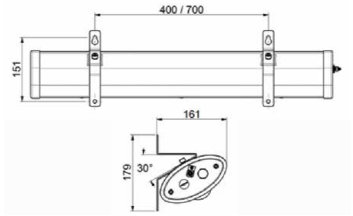

Wall Mount Bracket 30°

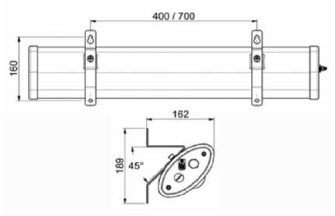

Wall Mount Bracket 45°

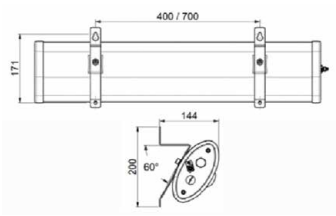

Wall Mount Bracket 60°

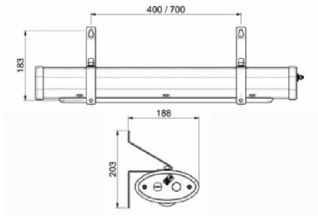

Wall Mount Bracket 90°

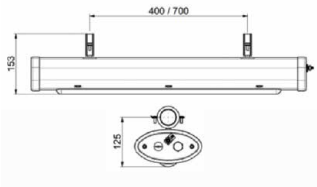

Pole Clamp

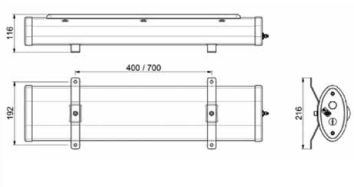

Ceiling Mount

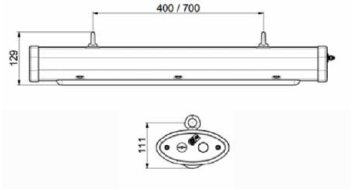

Eyelet

DuroSite® LED Conveyor Light
for Industrial Applications



Patent pending

Ratings and Certifications

- CE (IEC/EN61547, IEC/EN60598-1, IEC/EN60598-2-1, IEC/EN55015, IEC/EN61000-3-2, IEC/EN62031, IEC/EN62471)
- IP66 to EN60529
- NEMA 4X
- L70 rated for 150,000+ hours @ 25°C ambient
- 5yr full performance warranty

*All features not available on every model. Please refer to product part number pages for model specifics.

Mechanical Information

Fixture weight:	7.5 kg (16.5 lbs)
Shipping weight:	8.39 kg (18.5 lbs)
Mounting:	34mm Slip-fit stanchion mount
Cabling:	Junction box with screw down type terminal block (0.50 - 4.0mm²)

Specifications

Voltage options:	100 - 277V AC 50/60Hz	**Housing:**	Copper free aluminium
Operating temp:	-40°C to +65°C (-40°F to +149°F)	**Lens:**	Polycarbonate
Power factor:	>0.9	**CRI:**	75
THD:	<20%	**CCT:**	5000K (cool white)
Surge protection:	1 kV line to line, 2 kV line to ground		

Comparison

	Warranty	L70
Dialight Conveyor Light	5yr	>150,000
High Pressure Sodium	1	24,000
Metal Halide	1	15,000

Lumens	Wattage	Lm/W	Mounting Heights
4,150	60	69	6m and lower

Dimensions

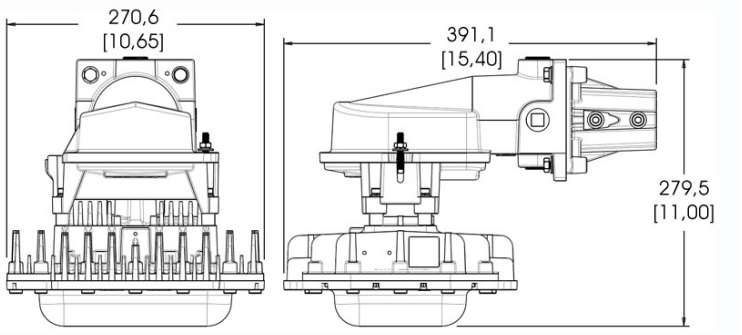

Dimension are in mm [inches]

Light Distribution Pattern

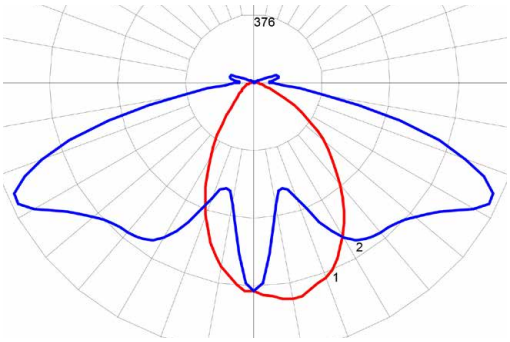

Wide Pattern

Mounting Options

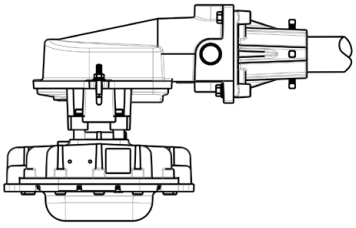



34 mm Slip-Fit Stanchion Mount Junction Box

Resources:
Datasheet: www.dialight.com/Assets/Brochures_And_Catalogs/Illumination/MDTDSCLX001.pdf • Case Studies, IES Files, LM79 Reports: www.dialight.com/Document/Index/710

DuroSite® LED Conveyor Light

Ordering Information and Mounting Accessories

Part Number	Initial Fixture Lumens	Wattage	Lm/W	IP Rating	Voltage	Colour Temperature (CCT)	Lens	Light Distribution
STWYC2N-CV34	4,150	60	69	IP66	100 - 277V AC	5000K (cool white)	Polycarbonate	Wide

[1]All values typical unless otherwise stated. Lumen values are typical (tolerance + / - 10%)

Spacing Table

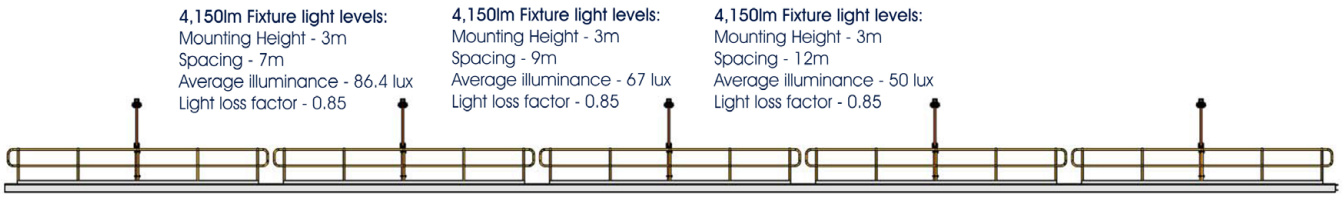

Mounting Options

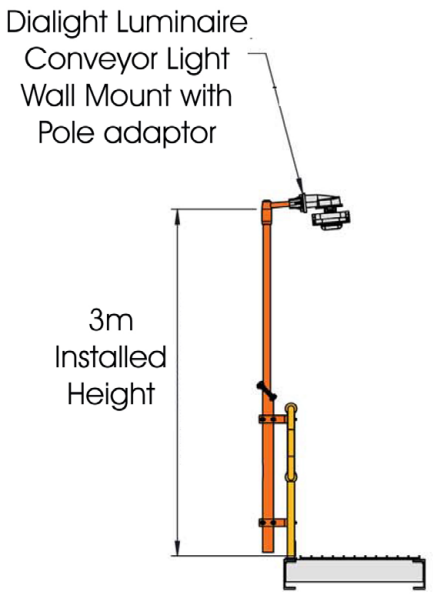

Conveyor Light Spacing

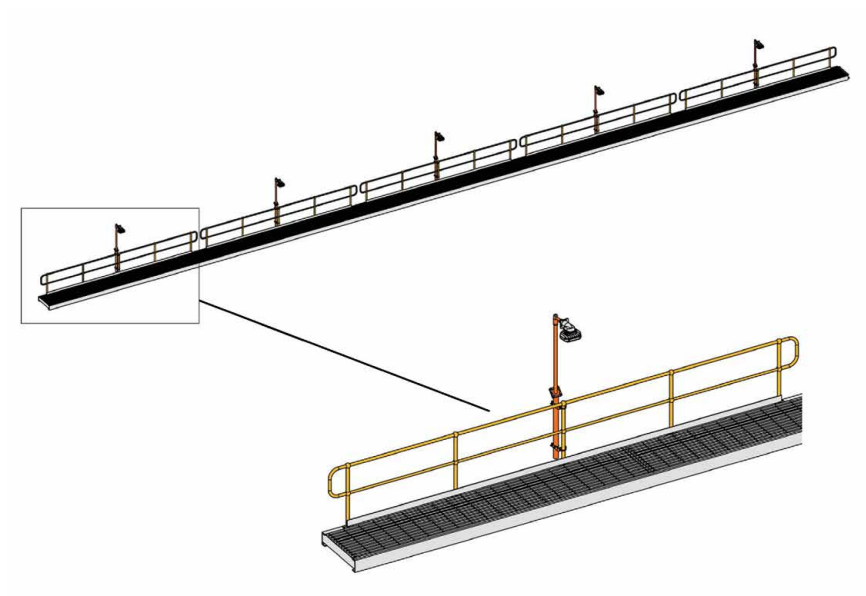

DuroSite® LED Area Light
for Industrial Applications



Patent pending

Ratings and Certifications
• CE (EN61547, EN60598, EN55015, EN62031, EN62471)
• IP66 to EN60529
• L70 rated for 150,000+ hours @ 25°C ambient
• 5yr full performance warranty

*All features not available on every model. Please refer to product part number pages for model specifics.

Mechanical Information	
Fixture weight:	5.22 kg (11.5 lbs)
Shipping weight:	6.12 kg (13.5 lbs)
Mounting:	Mounting bracket included
Cabling:	Factory installed 3 meter 3 core PVC cable

Specifications			
Voltage options:	100 - 277V AC	**Housing:**	Copper free aluminium
Operating temp:	-40°C to +65°C (-40°C to +149°F)	**Lens:**	Polycarbonate
Power factor:	>0.9	**CRI:**	70
THD:	<20%	**CCT:**	5000K (cool white)
Surge protection:	EN 61000-4-5 1 kV line to line, 2 kV line to ground		4000K (neutral white)

Comparison		
	Warranty	**L70**
Dialight Area Light	5yr	>150,000
Metal Halide	1	15,000
High Pressure Sodium	1	20,000

Lumens	Wattage	Lm/W	Mounting Heights
6,000	58	103	6m and lower

Dimensions

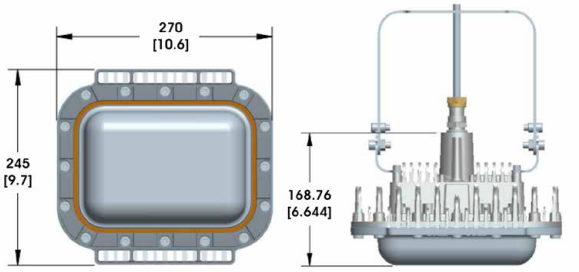

Dimension are in mm [inches]

Light Distribution Pattern

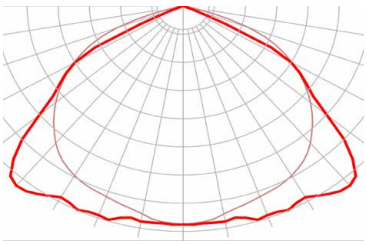

360° Pattern

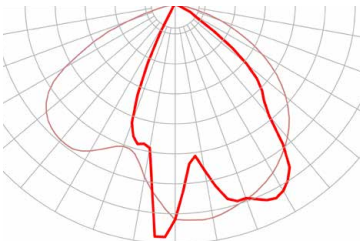

180° Pattern Mounted at 45°

Mounting Options



45° Wall Mount - STWxxxxW45-EU



Wall Mount - STWxxxxW01-EU



45° Stanchion Mount - STWxxxxS45-EU

Resources:
Datasheet: www.dialight.com/Assets/Brochures_And_Catalogs/Illumination/MDTFSTWALX001.pdf • Case Studies, IES Files, LM79 Reports: www.dialight.com/Document/Index/710

DuroSite® LED Area Light

Ordering Information and Mounting Accessories

Part Number	Initial Fixture Lumens	Wattage	Lm/W	IP Rating	Voltage	Colour Temperature (CCT)	Lens	Light Distribution
STW9C2N-EU	6,000	58	103	IP66	100 - 277V AC	5000K (cool white)	Polycarbonate	360°
Factory Installed Mounting Options								
STW9C2NW45-EU	6,000	58	103	IP66	100 - 277V AC	5000K (cool white)	Polycarbonate	360°
STW9C2NS45-EU	6,000	58	103	IP66	100 - 277V AC	5000K (cool white)	Polycarbonate	360°

[1]All values typical unless otherwise stated. Lumen values are typical (tolerance + / - 10%)
[2]180° optical pattern models are optimised for a 45° mounting angle
[3]Part numbers listed in the above table are cool white. For neutral white models, replace the 5th character with **N**. EX. STW5**C**2N-EU becomes STW5**N**2N-EU



HZXW3

- Stainless steel bracket

Bracket Dimensions

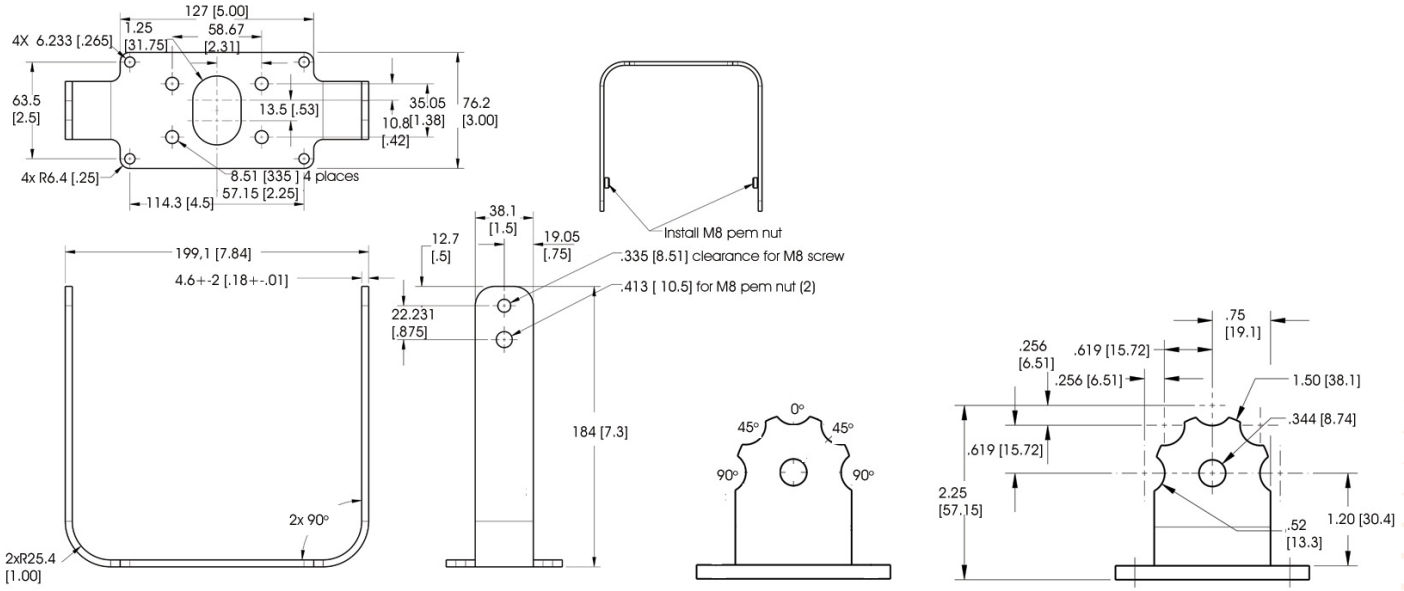

Dimension are in mm [inches]

DuroSite® LED Bulkhead
for Industrial Applications



Ratings and Certifications
• CE (EN61547:2009, EN60598:2008, EN55015:2006)
• IP66 / 67
• RoHS compliant
• Amber models available
• Emergency models available
• 5yr full performance warranty

*All features not available on every model. Please refer to product part number pages for model specifics.

Mechanical Information	
Fixture weight:	
Standard & Amber Models	
11W & 22W:	4.70 kg (10.3 lbs)
34W:	4.85 kg (10.7 lbs)
Emergency Models	
13W & 24W:	4.70 kg (10.3 lbs)
34W:	4.85 kg (10.7 lbs)
Cable Entry:	All cable entries are drilled and tapped

Specifications			
Voltage options:		**Housing:**	Copper free aluminium
Standard & Amber Models		**Power factor:**	>0.9
11W & 22W:	100 - 277V AC, or 24-48V DC	**THD:**	<15% at 120V AC
34W:	100 - 277V AC		<20% at 230V AC
Emergency Models		**Lens:**	High impact resistant glass
13W & 24W:	90 - 132V AC or 207 - 264V AC		Clear glass or frosted glass
36W:	207 - 264V AC	**CRI:**	70
Operating temp:		**CCT:**	4300K (neutral white)
Standard & Amber Models		Emergency Models	
11W & 22W:	-40°C to +60°C	**Battery**	
34W:	-40°C to +50°C	**13W & 24W:**	3.6V 4Ah NiMH
Emergency Models		**34W:**	3.6V 10Ah NiMH
13W & 24W:	-0°C to +50°C (-20°C options available)	**Expected Battery Life:**	4 years
34W:	-0°C to +40°C (-20°C options available)	**Battery Duration:**	180 Minutes @ lowest rated temperature
Surge protection:	EN 61000-4-5 1 kV line to line, 2 kV line to ground		

Comparison		
	Warranty	**L70**
Dialight Bulkhead	5yr	>100,000
Metal Halide	1	15,000
High Pressure Sodium	1	20,000
Fluorescent	1	24,000

Lumens	Wattage	Lm/W	Mounting Heights
2,250	34	66	6m
2,150	34	63	↕
1,200	22	55	↕
600	11	55	3m

Light Distribution Pattern

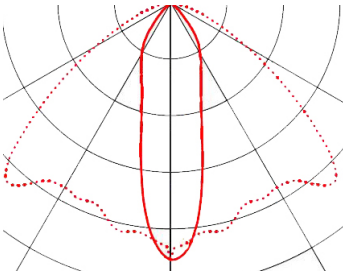

Oval Light Pattern (55° x 35°)

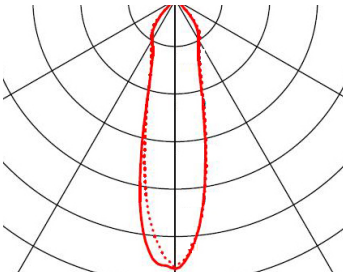

Narrow Light Pattern

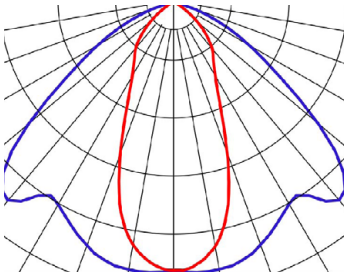

Oval Light Pattern (35° x 55°)

Resources:
Datasheet: www.dialight.com/Assets/Brochures_And_Catalogs/Illumination/MDEXWPXW001.pdf • Case Studies, IES Files, LM79 Reports: www.dialight.com/Document/Index/709

DuroSite® LED Bulkhead

Mounting Accessories

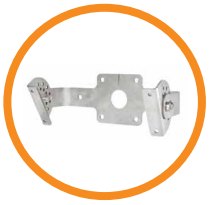

WP-BRKT-SS-ADJ

- Adjustable bracket
- Includes self-tapping screws



WP-STMB-LG00- 10

- Stanchion mount 90° right angle, 50mm NB



WP-STMB-LG85-50

- Non threaded bore 34mm diameter



WP-STMB-LG25-10

- Stanchion mount 25° right angle, 50mm NB

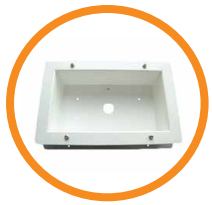

WP-RECESS-WH

- Recessed housing
- Bracket to fixture hardware



WP-BRKT-LG-PF

- Pipe and flush bracket
- Includes self-tapping screws



WPX-000799-BAT

- 4Ah 3.6V Battery module
- Replacement battery kit
- Battery backup models only

Dimensions

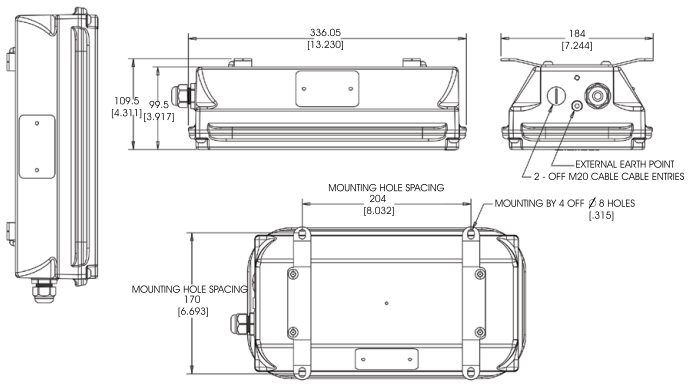

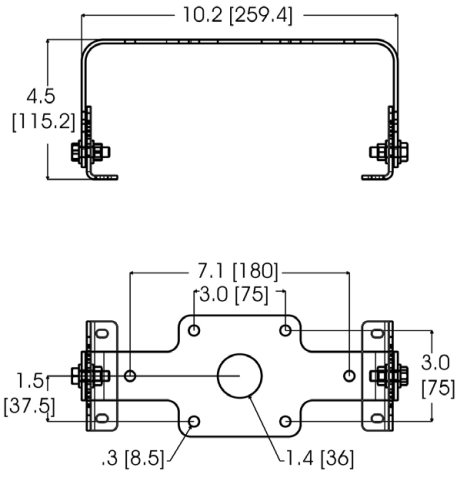

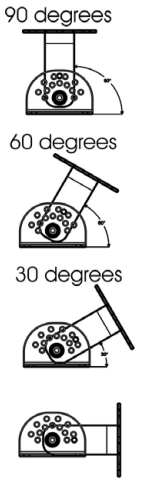

Dimension are in mm [inches]

*Shown with Flush mounting bracket

WP-BRKT-SS-ADJ

DuroSite® LED Bulkhead

Mounting Accessories

Without Bracket	30° Angle Bracket	Flush Bracket

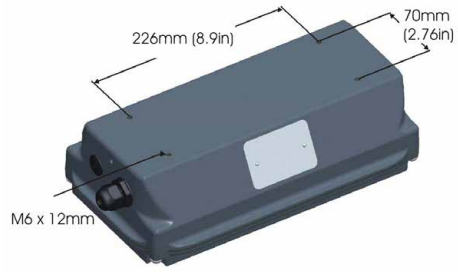

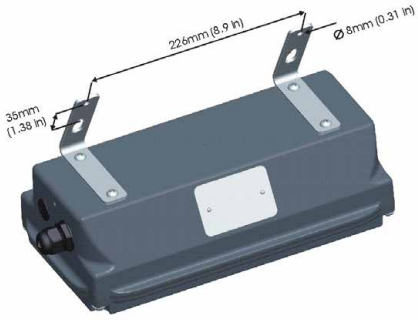

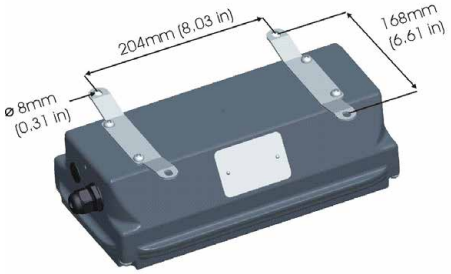

*Holes are blank and blind

Standard Option	Option "E"	Option "R"	Option "H"

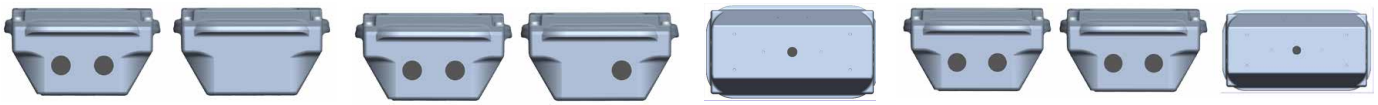

2 Entries One Side

2 Entries One Side, 1 Entry Opposite Side. Add E to the end of the order code

Add R to the end of the order code

2 Entries One Side, 2 Entries Opposite Side and 1 Entry in the Rear. Add H to the end of the order code.



WP-LM-FE-TRM-AU

- Man, arrow right
- Kit includes: emergency sign, sign bracket, mounting hardware



WP-LM-FE-TLM-AU

- Man, arrow left
- Kit includes: emergency sign, sign bracket, mounting hardware



WP-LM-FE-LM-AU

- Man, left
- Kit includes: emergency sign, sign bracket, mounting hardware



WP-LM-FE-RM-AU

- Man, right
- Kit includes: emergency sign, sign bracket, mounting hardware

WP-STMB-LG00-XX



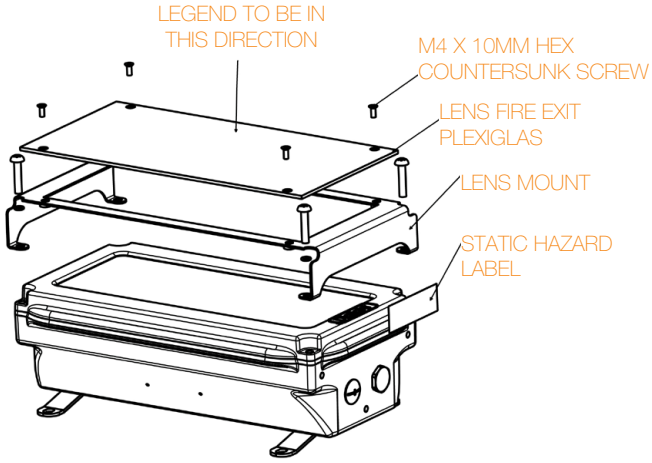

DuroSite® LED Bulkhead

Ordering Information

Part Number	Initial Fixture Lumens	Wattage	LPW	IP Rating	Voltage	Colour Temperature (CCT)	Lens	Light Distribution
Standard Models - 100 - 277V AC								
WP-2N3L-NLGC	2,250	34	66	IP66	100 - 277V AC	4300K (neutral white)	Clear tempered glass	Narrow
WP-4N3L-NLGC	2,250	34	66	IP66	100 - 277V AC	4300K (neutral white)	Clear tempered glass	Oval (35° X 55°)
WP-5N3L-NLGC	2,150	34	63	IP66	100 - 277V AC	4300K (neutral white)	Clear tempered glass	Oval (55° X 35°)
WP-2N3H-NLGC	1,200	22	55	IP66	100 - 277V AC	4300K (neutral white)	Clear tempered glass	Narrow
WP-4N3H-NLGC	1,200	22	55	IP66	100 - 277V AC	4300K (neutral white)	Clear tempered glass	Oval (35° X 55°)
WP-5N3H-NLGC	1,200	22	55	IP66	100 - 277V AC	4300K (neutral white)	Clear tempered glass	Oval (55° X 35°)
WP-2N3C-NLGC	600	11	55	IP66	100 - 277V AC	4300K (neutral white)	Clear tempered glass	Narrow
WP-4N3C-NLGC	600	11	55	IP66	100 - 277V AC	4300K (neutral white)	Clear tempered glass	Oval (35° X 55°)
WP-5N3C-NLGC	600	11	55	IP66	100 - 277V AC	4300K (neutral white)	Clear tempered glass	Oval (55° X 35°)
Standard Models - 24 - 48V DC								
WP-2N2H-NLGC	1,200	22	55	IP66	24 - 48V DC	4300K (neutral white)	Clear tempered glass	Narrow
WP-4N2H-NLGC	1,200	22	55	IP66	24 - 48V DC	4300K (neutral white)	Clear tempered glass	Oval (35° X 55°)
WP-5N2H-NLGC	1,200	22	55	IP66	24 - 48V DC	4300K (neutral white)	Clear tempered glass	Oval (55° X 35°)
WP-2N2C-NLGC	600	11	55	IP66	24 - 48V DC	4300K (neutral white)	Clear tempered glass	Narrow
WP-4N2C-NLGC	600	11	55	IP66	24 - 48V DC	4300K (neutral white)	Clear tempered glass	Oval (35° X 55°)
WP-5N2C-NLGC	600	11	55	IP66	24 - 48V DC	4300K (neutral white)	Clear tempered glass	Oval (55° X 35°)
Emergency Models - 207 - 264V AC								
WE-2N4L-NLGC	2,250	36	62	IP66	207-264V AC	4300K (neutral white)	Clear tempered glass	Wide
WE-4N4L-NLGC	2,250	36	62	IP66	207-264V AC	4300K (neutral white)	Clear tempered glass	Oval (35° X 55°)
WE-5N4L-NLGC	2,150	36	60	IP66	207-264V AC	4300K (neutral white)	Clear tempered glass	Oval (55° X 35°)
WE-2N4H-NLGC	1,200	24	55	IP66	207-264V AC	4300K (neutral white)	Clear tempered glass	Wide
WE-4N4H-NLGC	1,200	24	50	IP66	207-264V AC	4300K (neutral white)	Clear tempered glass	Oval (35° X 55°)
WE-5N4H-NLGC	1,200	24	50	IP66	207-264V AC	4300K (neutral white)	Clear tempered glass	Oval (55° X 35°)
WE-2N4C-NLGC	600	13	46	IP66	207-264V AC	4300K (neutral white)	Clear tempered glass	Wide
WE-4N4C-NLGC	600	13	46	IP66	207-264V AC	4300K (neutral white)	Clear tempered glass	Oval (35° X 55°)
WE-5N4C-NLGC	600	13	46	IP66	207-264V AC	4300K (neutral white)	Clear tempered glass	Oval (55° X 35°)
Emergency Models - 90-132V AC								
WE-2N5H-NLGC	1,200	24	55	IP66	90-132V AC	4300K (neutral white)	Clear tempered glass	Wide
WE-4N5H-NLGC	1,200	24	50	IP66	90-132V AC	4300K (neutral white)	Clear tempered glass	Oval (35° X 55°)
WE-5N5H-NLGC	1,200	24	50	IP66	90-132V AC	4300K (neutral white)	Clear tempered glass	Oval (55° X 35°)
WE-2N5C-NLGC	600	13	46	IP66	90-132V AC	4300K (neutral white)	Clear tempered glass	Wide
WE-4N5C-NLGC	600	13	46	IP66	90-132V AC	4300K (neutral white)	Clear tempered glass	Oval (35° X 55°)
WE-5N5C-NLGC	600	13	46	IP66	90-132V AC	4300K (neutral white)	Clear tempered glass	Oval (55° X 35°)
Amber Models - 207-264V AC[1]								
WP-2A3H-NLGC		22		IP66	207-264V AC	Amber	Clear tempered glass	Narrow
WP-4A3H-NLGC		22		IP66	207-264V AC	Amber	Clear tempered glass	Oval (35° X 55°)
WP-5A3H-NLGC		22		IP66	207-264V AC	Amber	Clear tempered glass	Oval (55° X 35°)
WP-2A3C-NLGC		11		IP66	207-264V AC	Amber	Clear tempered glass	Narrow
WP-4A3C-NLGC		11		IP66	207-264V AC	Amber	Clear tempered glass	Oval (35° X 55°)
WP-5A3C-NLGC		11		IP66	207-264V AC	Amber	Clear tempered glass	Oval (55° X 35°)

[1]All values typical unless otherwise stated, Lumen values are typical (tolerance +/- 10%).
[2]Part number in table show fixture without a bracket.
[3]All the codes listed above (expect for amber models) are neutral white. For cool white, change the "**N**" to "**C**" Ex: WP-4**N**3L-NLGC becomes WP-4**C**3L-NLGC.
[4]Angle bracket replace the 10th character with an "**A**" WPA-2C3L-**N**LGC becomes WPA-2N3L-**A**LGC
[5]Flush bracket replace the 10th character with a "**F**" WPA-2C3L-**N**LGC becomes WPA-2N3L-**F**LGC
[6]Frosted glass models replace the 13th character with a "**F**" WPA-2C3L-NLG**C** becomes WPA-2C3L-NLG**F** (Frosted lens will reduce lumen output by 6%)
[7]For the -20°C option models add -20 to the ordering code WEA-2C4H-NLGC becomes WEA-2C4H-NLGC-**20**

DuroSite® LED Shower Safe Luminaire - Battery Backup

for Industrial Applications

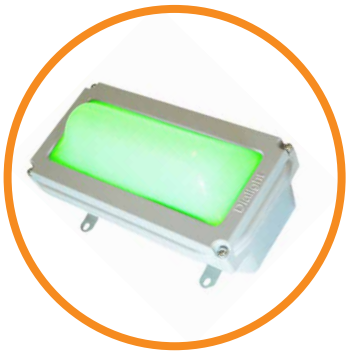

Battery Information	
Battery:	3.6V 4Ah NiMH
Expected life:	4 years
Duration:	> 3 hours

Ratings and Certifications
• CE (EN61547:2009, EN55015:2006, EN60598-2-22:1999)
• IEC60068 salt spray testing - severity 1
• IP66 to EN60529
• IK10 to EN50102
• L70 rated for 150,000+ hours @ 25°C ambient
• 5yr full performance warranty (battery not included)

*All features not available on every model. Please refer to product part number pages for model specifics.

Mechanical Information	
Fixture weight:	5.4 kg (11.9 lbs)
Shipping weight:	6 kg (12.9 lbs)
Cabling:	All cable entries are drilled and tapped

Specifications			
Voltage options:	230 / 240V AC	**Housing:**	Copper free aluminium
Operating temp:	0°C to +50°C (-20°C models available)	**Lens:**	Polycarbonate
Power factor:	>0.9		
THD:	<20%		
Surge protection:	EN 61000-4-5 1 kV line to line, 2 kV line to ground		

Dimensions

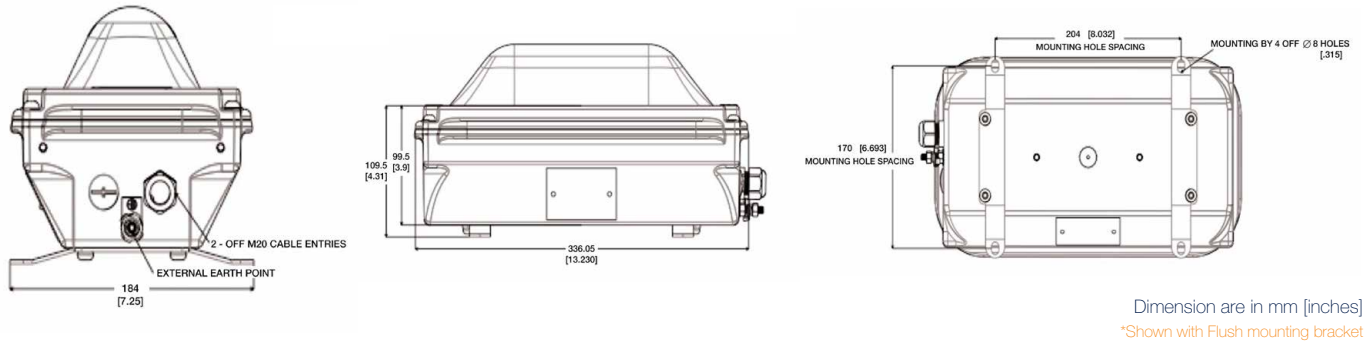

Dimension are in mm [inches]
*Shown with Flush mounting bracket

WP-BRKT-SS-ADJ

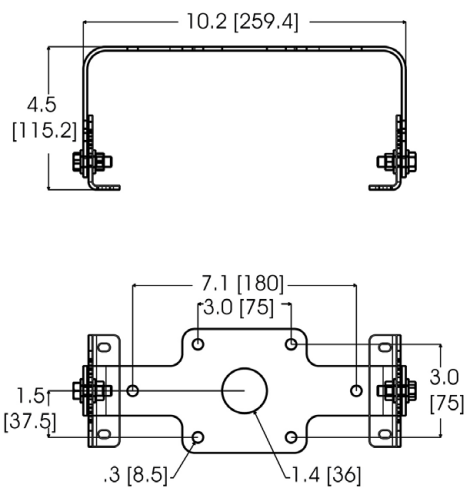

Recessed Housing

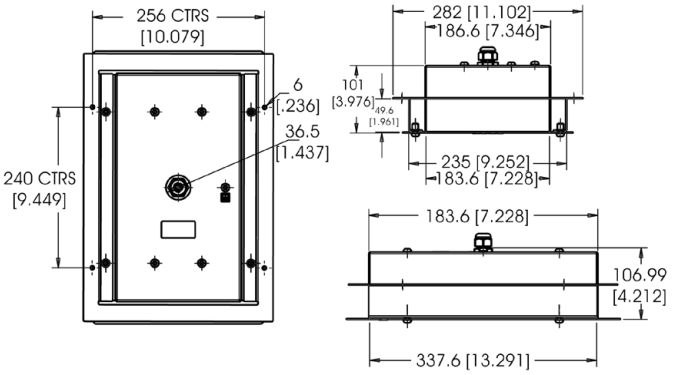

Dimension are in mm [inches]

Resources:
Datasheet: www.dialight.com/Assets/Brochures_And_Catalogs/Illumination/MDEXSSWSEUHZC.pdf • Case Studies, IES Files, LM79 Reports: www.dialight.com/Document/Index/709

DuroSite® LED Shower Safe Luminaire - Battery Backup

Ordering Information and Mounting Accessories

Part Number	Wattage	Lens	Description
WE-0G4H-FLGD	24	Polycarbonate	18LED Shower light flush mount emergency GREEN
WE-0R4H-FLGD	24	Polycarbonate	18LED Shower light optics flush mount emergency RED
WE-0N4L-FLGC	24	Polycarbonate	18LED Shower light flush mount emergency WHITE

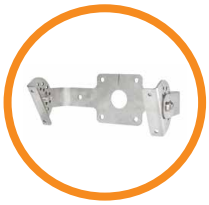

WP-BRKT-SS-ADJ
- Adjustable bracket
- Includes self-tapping screws



WP-STMB-LG85-50
- Non threaded bore 34mm diameter



WP-BRKT-LG-PF
- Pipe and flush bracket
- Includes self-tapping screws

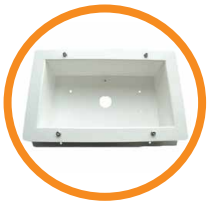

WP-RECESS-WH
- Recessed housing
- Bracket to fixture hardware



WPX-000799-BAT
- 4Ah 3.6V Battery module
- Replacement battery kit
- Battery backup models only



WP-STMB-LG00- 10
- Stanchion mount 90° right angle, 50mm NB



WP-STMB-LG25-10
- Stanchion mount 25° right angle, 50mm NB

WP-STMB-LG00-XX



Without Bracket	30° Angle Bracket	Flush Bracket

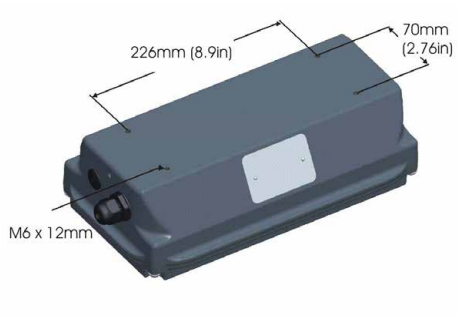

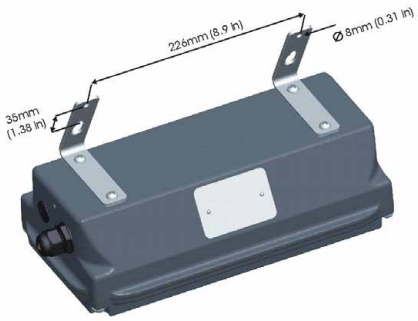

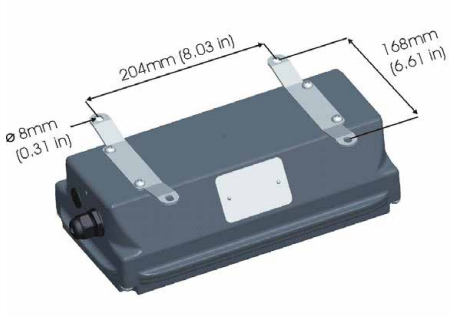

SafeSite® LED High Bay

for Hazardous Applications



Patent pending

Ratings and Certifications	
• CE (EN61547:2009, EN55015:2006)	• ATEX / IECEx Zones 1, 21
• Ex II 2GD Ex d IIB T4 Gb (factory fitted cable)	• ATEX / IECEx Zones 2, 22
• Ex II 2GD Ex d e IIB T4 Gb (factory fitted junction box)	• IP66
• Ex tb IIIC 135°C Db	• IK05
• L70 rated for 150,000+ hours @ 25°C ambient	• 5yr full performance warranty
• ABS Design Assessed #13-HS1043210A	• RoHS compliant

*All features not available on every model. Please refer to product part number pages for model specifics.

Mechanical Information	
Fixture weight:	13.6 kg (30 lbs) with fixed cable
	15.1 kg (33 lbs) with junction box
Mounting:	Stirrup mounting bracket included
Cabeling:	Factory installed 3 meter SWB cable or factory fitted junction terminal box with 2 off M20 x 1.5mm or 2 off M25 x 1.5mm cable entries

Specifications			
Voltage options:	100 - 277V AC	**Housing:**	Copper free aluminium
Operating temp:	-40°C to +60°C (-40°F to +140°F)	**Lens:**	Toughened glass (optional fragment retention available)
Power factor:	>0.9	**CRI:**	70
THD:	<12%	**CCT:**	5000K (cool white)
Surge protection:	EN 61000-4-5 1 kV line to line, 2 kV line to ground		

Comparison	Warranty	L70	T-Rating
Dialight Linear	5 / 10yr	>150,000	T5
Metal Halide	1	15,000	T2
High Pressure Sodium	1	20,000	T2A

Lumens	Wattage	Lm/W	Mounting Heights
12,500	172	73	15m
11,000	150	73	↕
9,500	150	63	5m

Dimensions

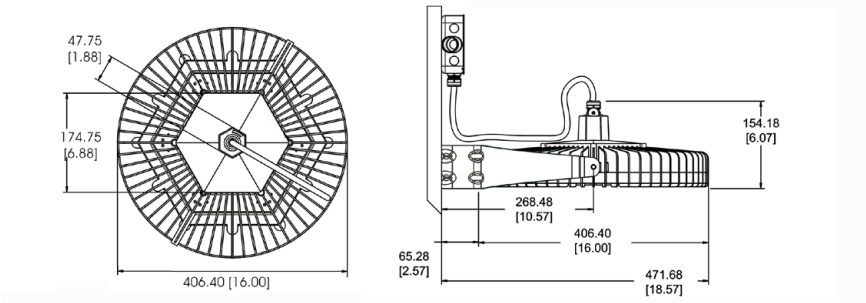

Dimension are in mm [inches]

Light Distribution Pattern

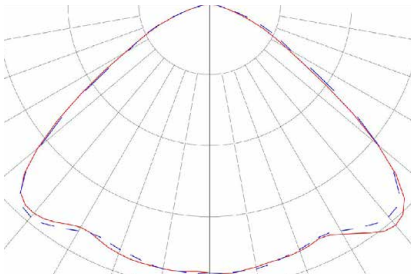

Circular Pattern

Mounting Options



Swivel Bracket

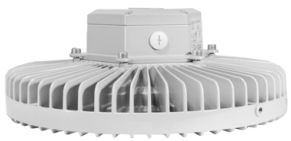

Junction Box

Resources:
Datasheet: www.dialight.com/Assets/Brochures_And_Catalogs/Illumination/MDTFHZCHB001.pdf • Case Studies, IES Files, LM79 Reports: www.dialight.com

SafeSite® LED High Bay

Ordering Information and Mounting Accessories

Part Number	Initial Fixture Lumens	Wattage	Lm/W	IP Rating	Voltage	Colour Temperature (CCT)	Lens	Light Distribution
Standard Models								
HBA9CMP	12,500	172	73	IP66	100 - 277V AC	5000K (cool white)	Toughened glass	Circular
HBA9C4P	11,000	150	73	IP66	100 - 277V AC	5000K (cool white)	Toughened glass	Circular
HBA9C4M	9,500	150	63	IP66	100 - 277V AC	5000K (cool white)	Toughened glass	Circular
Junction Box Models								
HBJA9CMP	12,500	172	73	IP66	100 - 277V AC	5000K (cool white)	Toughened glass	Circular
HBJA9C4P	11,000	150	73	IP66	100 - 277V AC	5000K (cool white)	Toughened glass	Circular
HBJA9C4M	9,500	150	63	IP66	100 - 277V AC	5000K (cool white)	Toughened glass	Circular

[1]All values typical unless otherwise stated. Lumen values are typical (tolerance + / - 10%)



HBXGS
- Glare Shield (interior use only, for use with flat lens options)



HBXSBK
- Sand blast kit (flat lens)

HBXSBL
- Sacrificial flat lens



HBXSBDK
- Sand blast kit (dome lens)

HBXSBDL
- Sacrificial dome lens

HBXW3 - Swivel Bracket Dimensions

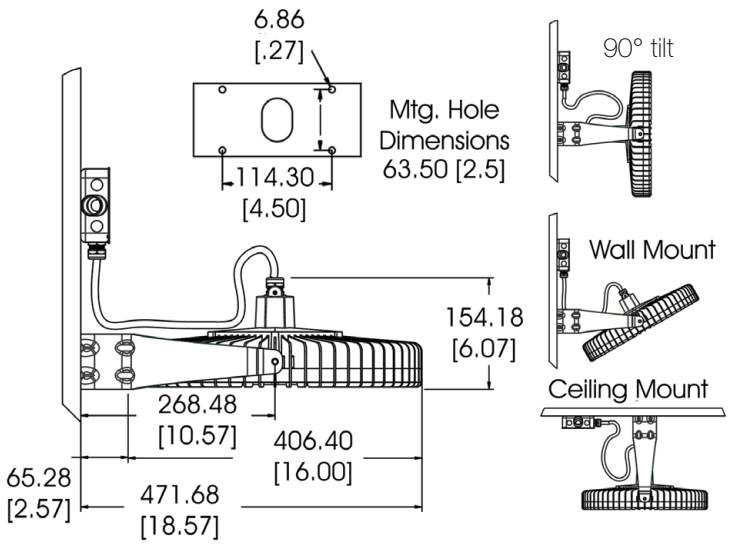

Dimension are in mm [inches]

SafeSite® LED Stainless Steel Linear

for Hazardous Applications



Ratings and Certifications	
• CE (EN61547:2009, EN60598:2008, EN55015:2006)	• ATEX / IECEx Zones 1, 21
• Ex II 2GD e mb IIC T4 Gb (Ta = -20°C to +60°C)	• ATEX / IECEx Zones 2, 22
• Ex tb IIIC T135°C Db (Ta = -20°C to +60°C)	• IP66 / 67
• C & D shock compliant to MOD specification BR8470	• IK09 to EN50102
• L70 rated for 150,000+ hours @ 25°C ambient	• 5yr full performance warranty
• Certificate numbers: IECEx SIR 12.0093X, SIRA12ATEX3217X	

*All features not available on every model. Please refer to product part number pages for model specifics.

Mechanical Information	
Fixture weight:	1308mm - 11.4 kg (25.1lbs) 708mm - 6.5 kg (15 lbs)
Shipping weight:	1308mm - 14.2 kg (31.3lbs) 708mm - 9.1 kg (20 lbs)
Mounting:	(2) M8 fixing points
Cable Entry:	2 x M20 cable entries at both ends, through wired as standard. Consult factory for other options.

Specifications			
Voltage options:	110 - 250V AC, 50/60 Hz	**Housing:**	316 Marine grade stainless steel
Operating temp:	-20°C to +60°C	**Lens:**	High impact resistant polycarbonate
Power factor:	>0.9	**CRI:**	70
THD:	<15%	**CCT:**	5000K (cool white)
Surge protection:	EN 61000-4-5 1 kV line to line, 2 kV line to ground		

Comparison		
	Warranty	**L70**
Dialight Linear	5yr	>150,000
Fluorescent	1	24,000

Lumens	Wattage	Lm/W	Mounting Heights
5,100	64	81	6m
			↕
2,600	32	81	3m

Dimensions

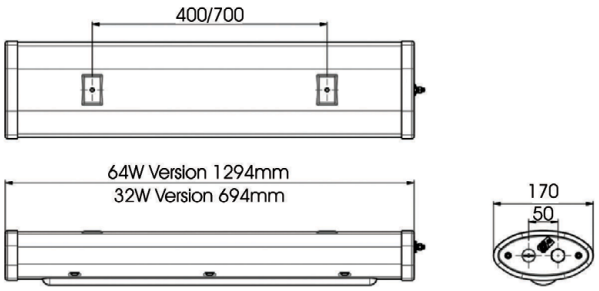

Dimension are in mm

Light Distribution Pattern

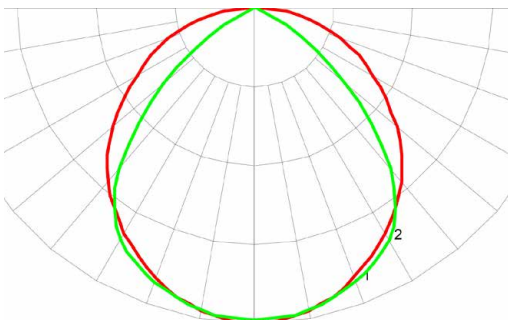

Circular Pattern

Resources:
Datasheet: www.dialight.com/Assets/Brochures_And_Catalogs/Illumination/_MDTFSFSHZLSSEUX001.pdf • Case Studies, IES Files, LM79 Reports: www.dialight.com/Document/Index/712

SafeSite® LED Stainless Steel Linear

Ordering Information and Mounting Accessories

Part Number	Initial Fixture Lumens	Wattage	Lm/W	IP Rating	Voltage	Colour Temperature (CCT)	Lens	Light Distribution
ELA-1C3R-SSCB	5,100	64	81	IP66/67	110 - 277V AC	5000K (cool white)	Polycarbonate	Circular
ELA-1C3M-SSCB	2,600	32	81	IP66/67	110 - 277V AC	5000K (cool white)	Polycarbonate	Circular

[1]All values typical unless otherwise stated. Lumen values are typical (tolerance + / - 10%)
[2]For factory fitted safety shackle option, add 1 as a suffix to the part code. E.g.: ELA-1C3R-SSCB-1



ELXCMBSS

- 316 Marine Grade stainless steel ceiling mount kit



ELXPCSS40

- 40Ø - 45mm range 316 Marine Grade stainless steel pole clamp

ELXPCSS47

- 47Ø - 51mm range 316 Marine Grade stainless steel pole clamp

ELXPCSS54

- 54Ø - 57mm range 316 Marine Grade stainless steel pole clamp

ELXPCSS59

- 59Ø - 62mm range 316 Marine Grade stainless steel pole clamp



ELXWMBSS30

- 30° 316 Marine Grade stainless steel wall mount kit

ELXWMBSS45

- 45° 316 Marine Grade stainless steel wall mount kit

ELXWMBSS60

- 60° 316 Marine Grade stainless steel wall mount kit

ELXWMBSS90

- 90° 316 Marine Grade stainless steel wall mount kit



ELXEYESS

- 316 Marine Grade stainless steel eyelet kit

Mounting Options

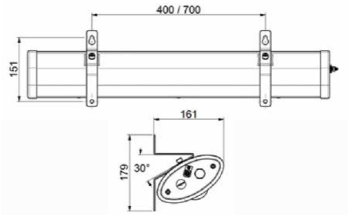

Wall Mount Bracket 30°

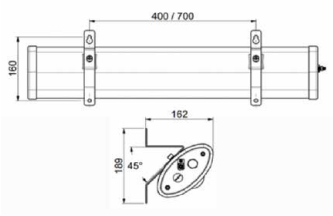

Wall Mount Bracket 45°

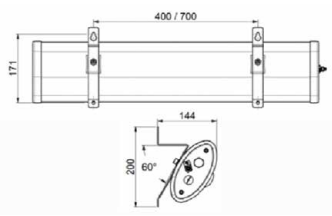

Wall Mount Bracket 60°

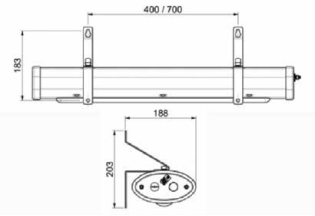

Wall Mount Bracket 90°

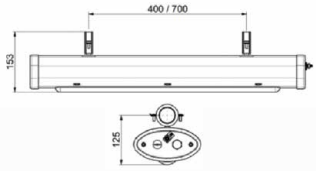

Pole Clamp

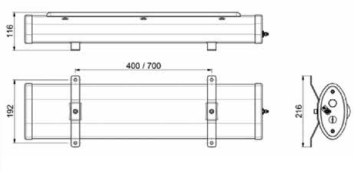

Ceiling Mount

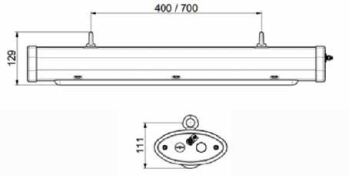

Eyelet

SafeSite® LED Stainless Steel Linear - Battery Backup

for Hazardous Applications



Battery Information	
Battery:	3.6V 10Ah NiMH
Expected life:	4 years
Duration:	> 180 minutes

Ratings and Certifications	
• CE (EN61547:2009, EN60598:2008, EN55015:2006)	• ATEX / IECEx Zones 1, 21
• Ex II 2GD e mb IIC T4 Gb (Ta = -20°C to +60°C)	• ATEX / IECEx Zones 2, 22
• Ex tb IIIC T135°C Db (Ta = -20°C to +60°C)	• IP66 / 67
• C & D shock compliant to MOD specification BR8470	• IK09 to EN50102
• L70 rated for 150,000+ hours @ 25°C ambient	• 5yr full performance warranty
• Certificate numbers: IECEx SIR 12.0093X, SIRA12ATEX3217X	

*All features not available on every model. Please refer to product part number pages for model specifics.

Mechanical Information	
Fixture weight:	1450 mm - 14.2 kg (31 lbs) 850 mm - 8.8 kg (20 lbs)
Shipping weight:	1450 mm - 17.2 kg (38 lbs) 850 mm - 11 kg (25 lbs)
Mounting:	(2) M8 fixing points
Cable Entry:	2 x M20 cable entries at both ends, through wired as standard. Consult factory for other options.

Specifications			
Voltage options:	230 / 240V AC, 50/60 Hz	**Housing:**	316 Marine grade stainless steel
Operating temp:	-20°C to +60°C	**Lens:**	High impact resistant polycarbonate
Power factor:	>0.9	**CRI:**	70
THD:	<20%	**CCT:**	5000K (cool white)
Surge protection:	EN 61000-4-5 1 kV line to line, 2 kV line to ground		

Comparison		
	Warranty	**L70**
Dialight Linear	5yr	>150,000
Fluorescent	1	24,000

Lumens	Wattage	Lm/W	Mounting Heights
5,100	70	73	6m
			↕
2,800	35	74	3m

Dimensions

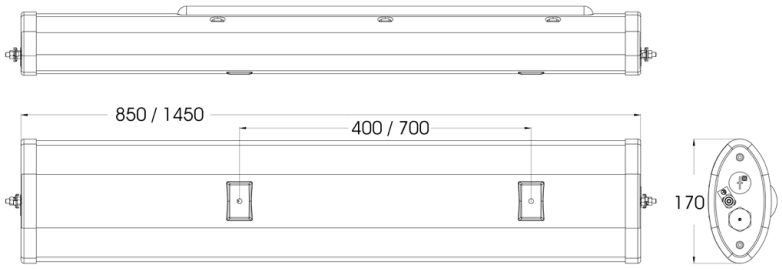

Dimension are in mm

Light Distribution Pattern

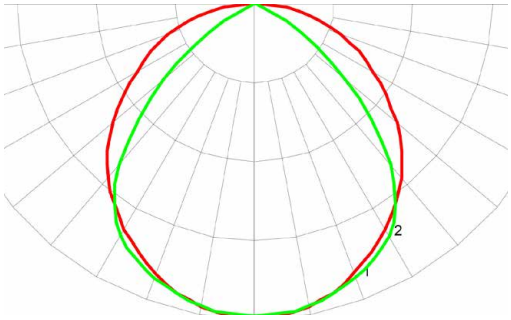

Circular Pattern

Resources:
Datasheet: www.dialight.com/Assets/Brochures_And_Catalogs/Illumination/_MDTFSFSHZLSSEUX001.pdf • Case Studies, IES Files, LM79 Reports: www.dialight.com/Document/Index/712

SafeSite® LED Stainless Steel Linear - Battery Backup

Ordering Information and Mounting Accessories

Part Number	Initial Fixture Lumens	Wattage	Lm/W	IP Rating	Voltage	Colour Temperature (CCT)	Lens	Light Distribution
Standard Models								
ELEA-2C4R-SSCB	5,100	70	73	IP66/67	230 / 240V AC	5000K (cool white)	Polycarbonate	Circular
ELEA-2C4M-SSCB	2,800	35	74	IP66/67	230 / 240V AC	5000K (cool white)	Polycarbonate	Circular
Emergency Shower Safe Models								
ELEA-2G4R-SSCB		70		IP66/67	230 / 240V AC	Green	Polycarbonate	Circular
ELEA-2G4M-SSCB		35		IP66/67	230 / 240V AC	Green	Polycarbonate	Circular

[1]All values typical unless otherwise stated. Lumen values are typical (tolerance + / - 10%)
[2]For factory fitted safety shackle option, add 1 as a suffix to the part code. E.g.: ELA-1C3R-SSCB-1



ELXCMBSS
- 316 Marine Grade stainless steel ceiling mount kit



ELXEYESS
- 316 Marine Grade stainless steel eyelet kit



ELX-BATT-KIT
- 3.6V 10Ah NiMH battery kit



ELXPCSS40
- 40Ø - 45mm range 316 Marine Grade stainless steel pole clamp

ELXPCSS47
- 47Ø - 51mm range 316 Marine Grade stainless steel pole clamp

ELXPCSS54
- 54Ø - 57mm range 316 Marine Grade stainless steel pole clamp

ELXPCSS59
- 59Ø - 62mm range 316 Marine Grade stainless steel pole clamp



ELXWMBSS30
- 30° 316 Marine Grade stainless steel wall mount kit

ELXWMBSS45
- 45° 316 Marine Grade stainless steel wall mount kit

ELXWMBSS60
- 60° 316 Marine Grade stainless steel wall mount kit

ELXWMBSS90
- 90° 316 Marine Grade stainless steel wall mount kit

Mounting Options

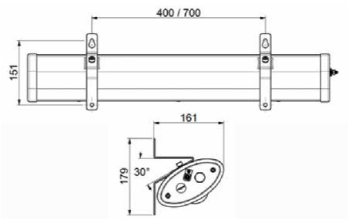

Wall Mount Bracket 30°

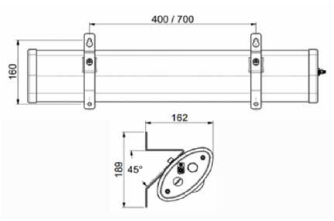

Wall Mount Bracket 45°

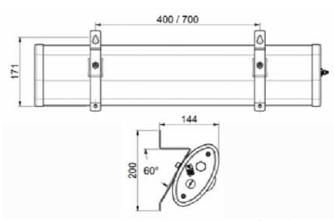

Wall Mount Bracket 60°

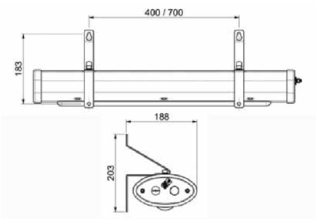

Wall Mount Bracket 90°

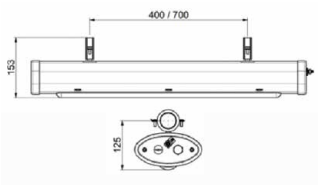

Pole Clamp

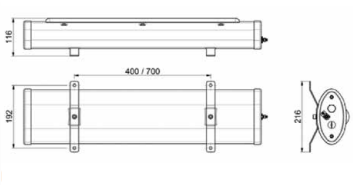

Ceiling Mount

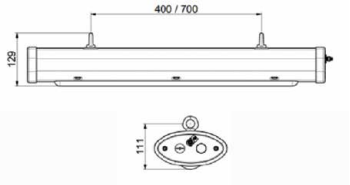

Eyelet

SafeSite® LED Area Light
for Hazardous Applications



Ratings and Certifications	
• CE (EN61547:2009, EN55015:2006)	• ATEX / IECEx Zones 1, 21
• Ex II 2GD Ex d IIC T4 Gb (Ta= -40°C to +65°C)	• ATEX / IECEx Zones 2, 22
• Ex t IIIC T135°C Db IP 6X (Ta = -40°C to +65°C)	• IP66
• Ex II 2GD Ex d IIC T5 Gb (Ta= -40°C to +42°C)	• IK08
• Ex t IIIC T100°C Db IP 6X (Ta = -40°C to +42°C)	• 5yr full performance warranty
• L70 rated for 150,000+ hours @ 25°C ambient	• RoHS compliant
• ABS Design Assessed #13-HS1043210C-PDA	

*All features not available on every model. Please refer to product part number pages for model specifics.

Mechanical Information	
Fixture weight:	**Zone 1, 21** - 9.53 kg (21 lbs)
	Zone 2, 22 - 7.5 kg (16.5 lbs)
Shipping weight:	**Zone 1, 21** - 10.43 kg (23 lbs)
	Zone 2, 22 - 8.16 kg (18.5 lbs)
Mounting:	Supplied with stirrup mounting bracket
Cabling:	Factory installed 3 meter SWB cable

Specifications			
Voltage options:	100 - 277V AC, 50/60 Hz	**Housing:**	Copper free aluminium
Operating temp:	-40°C to +65°C (-40°F to +149°F)	**Lens:**	Toughened glass
Power factor:	>0.9	**CRI:**	75
THD:	<20%	**CCT:**	5000K (cool white)
Surge protection:	1 kV line to line, 2 kV line to ground		4000K (neutral white)

Comparison			
	Warranty	**L70**	**T-Rating**
Dialight Area Light	5yr	>150,000	T5
Metal Halide	1	15,000	T3
High Pressure Sodium	1	20,000	T2A

Lumens	Wattage	Lm/W	Mounting Heights
5,600	58	103	6m
			↕
2,000	22	91	3m

Dimensions

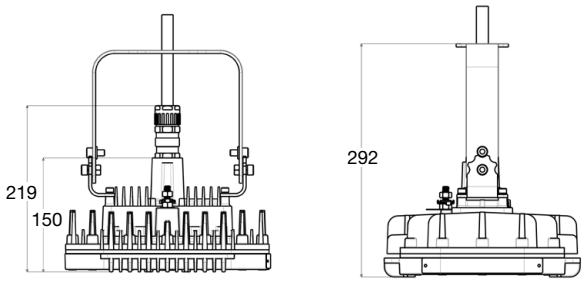

Zone 1, 21

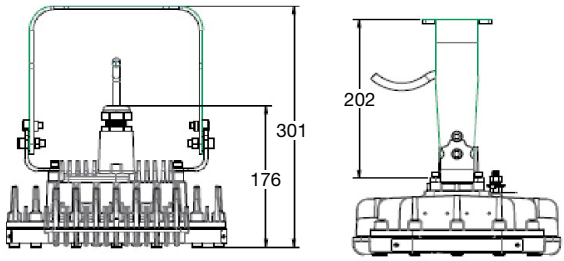

Zone 2, 22

Dimension are in mm

Light Distribution Pattern

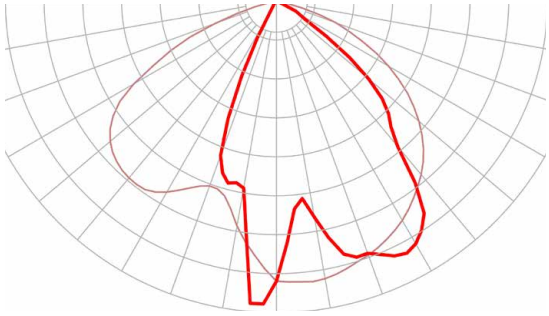

180° Pattern Mounted at 45°

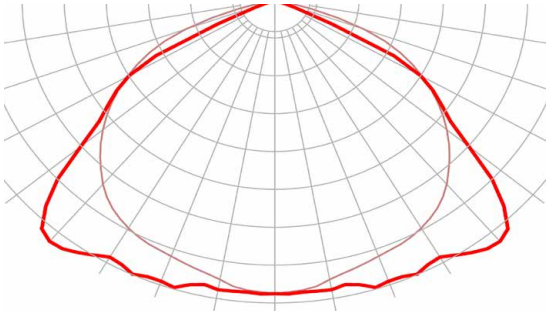

360° Pattern

Resources:
Datasheet: www.dialight.com/Assets/Brochures_And_Catalogs/Illumination/MDTFSTWALX001.pdf • Case Studies, IES Files, LM79 Reports: www.dialight.com/Document/Index/710

SafeSite® LED Area Light

Ordering Information and Mounting Accessories

Part Number	Initial Fixture Lumens	Wattage	Lm/W	IP Rating	Voltage	Colour Temperature (CCT)	Lens	Light Distribution
IECEx / ATEX Zone 1, 21								
HZA8C2N	5,600	58	103	IP66	100 - 277V AC	5000K (cool white)	Toughened glass	180°
HZA9C2N	6,000	88	97	IP66	100 - 277V AC	5000K (cool white)	Toughened glass	360°
IECEx / ATEX Zone 2, 22								
HZB1C2N	2,500	22	114	IP66	100 - 277V AC	5000K (cool white)	Toughened glass	360°
HZB0C2N	2,000	22	91	IP66	100 - 277V AC	5000K (cool white)	Toughened glass	180°
Wildlife Friendly Models								
HZA9A2N	3,700	58	64	IP66	100 - 277V AC	Amber	Toughened glass	360°

[1]All values typical unless otherwise stated. Lumen values are typical (tolerance + / - 10%)
[2]Part numbers listed in the above table are cool white. For neutral white models, replace the 5th character with **N**. EX. STW5**C**2N-EU becomes STW5**N**2N-EU

SafeSite® LED Area Light - Junction Box

for Hazardous Applications



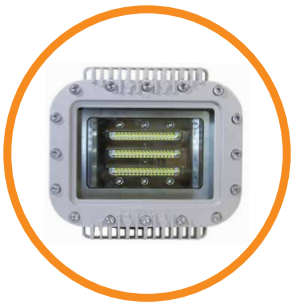

Ratings and Certifications	
• ABS Design Assessed #13-HS1043210C-PDA	• ATEX / IECEx Zones 1, 21
• Ex II 2GD Ex d IIC T4 Gb (Ta= -40°C to +65°C)	• ATEX / IECEx Zones 2, 22
• Ex t IIIC T135°C Db IP 6X (Ta = -40°C to +65°C)	• IP66
• Ex II 2GD Ex d IIC T5 Gb (Ta= -40°C to +42°C)	• IK08
• Ex t IIIC T100°C Db IP 6X (Ta = -40°C to +42°C)	• 5yr full performance warranty
• L70 rated for 150,000+ hours @ 25°C ambient	• RoHS compliant

*All features not available on every model. Please refer to product part number pages for model specifics.

Mechanical Information	
Fixture weight:	**Zone 1, 21** - 9.07 kg (20 lbs)
	Zone 2, 22 - 7.67 kg (16.9 lbs)
Shipping weight:	**Zone 1, 21** - 9.98 kg (22 lbs)
	Zone 2, 22 - 8.57 kg (18.9 lbs)
Mounting:	Supplied with stirrup mounting bracket
Cabling:	Factory installed junction box

Specifications			
Voltage options:	100 - 277V AC, 50/60 Hz	**Housing:**	Copper free aluminium
Operating temp:	-20°C to +65°C (-40°F to +149°F)	**Lens:**	Toughened glass
Power factor:	>0.9	**CRI:**	75
THD:	<20%	**CCT:**	5000K (cool white)
Surge protection:	1 kV line to line, 2 kV line to ground		4000K (neutral white)

Comparison			
	Warranty	**L70**	**T-Rating**
Dialight Area Light	5yr	>150,000	T5
Metal Halide	1	15,000	T3
High Pressure Sodium	1	20,000	T2A

Lumens	Wattage	Lm/W	Mounting Heights
18,000	210	86	12m
12,000	140	86	
6,000	70	86	
3,700	70	53	3m

Single Mounting

Dimensions

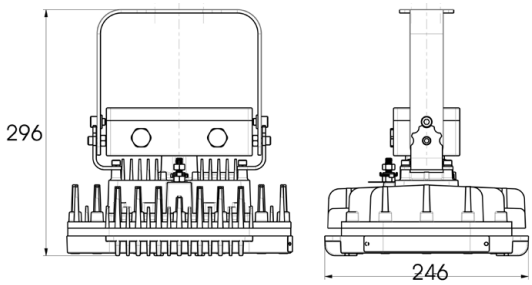

Zone 1, 21 with Junction Box

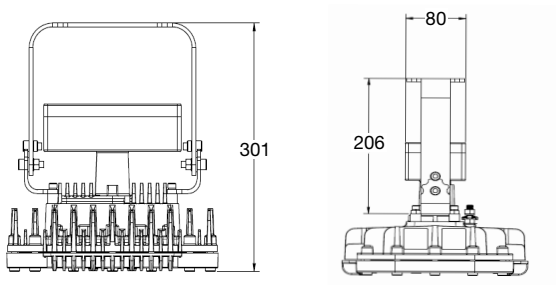

Zone 2, 22 with Junction Box

Dimension are in mm

Light Distribution Pattern

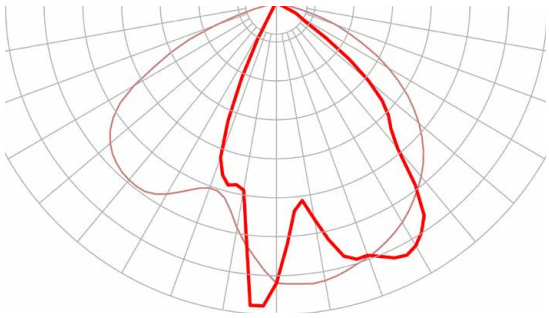

180° Pattern Mounted at 45°

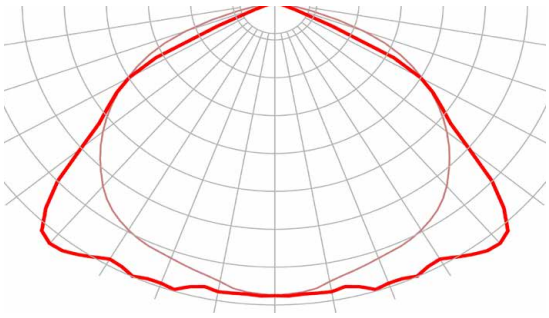

360° Pattern

Resources:
Datasheet: www.dialight.com/Assets/Brochures_And_Catalogs/Illumination/MDTFHZSALMJBEUX001.pdf • Case Studies, IES Files, LM79 Reports: www.dialight.com/Document/Index/710

SafeSite® LED Area Light - Junction Box

Ordering Information and Mounting Accessories

Part Number	Initial Fixture Lumens	Wattage	Lm/W	IP Rating	Voltage	Colour Temperature (CCT)	Lens	Light Distribution
Standard Mount								
HZJA9C2N	6,000	70	86	IP66	100 - 277V AC	5000K (cool white)	Toughened glass	360°
Multi-Fixture Models								
HZJA9C2N-3	18,000	210	86	IP66	100 - 277V AC	5000K (cool white)	Toughened glass	360°
HZJA9C2N-2	12,000	140	86	IP66	100 - 277V AC	5000K (cool white)	Toughened glass	360°
Wildlife Friendly Models								
HZJA8A2N	3,700	70	53	IP66	100 - 277V AC	Amber	Toughened glass	180°

[1]All values typical unless otherwise stated. Lumen values are typical (tolerance + / - 10%)
[2]Part numbers listed in the above table are cool white. For neutral white models, replace the 5th character with **N**. EX. STW5**C**2N-EU becomes STW5**N**2N-EU

Mounting Options

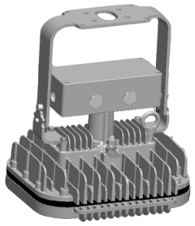



Dual Mounting



Triple Mounting

Mounting Options - Dimensions

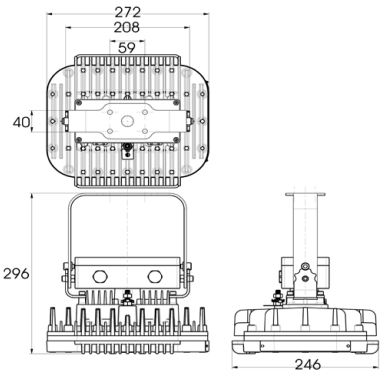

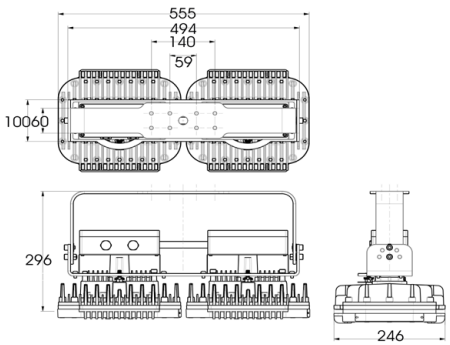

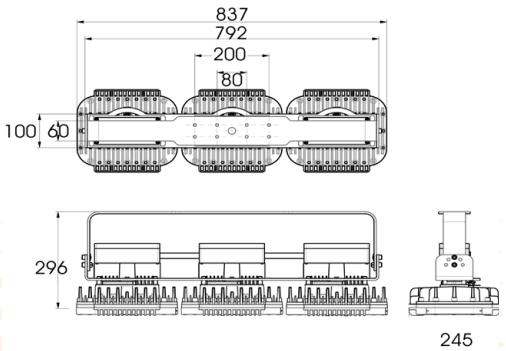

SafeSite® LED Area Light - Amber

for Hazardous Applications



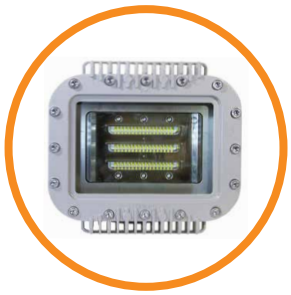

Ratings and Certifications	
• ABS Design Assessed #13-HS1043210C-PDA	• ATEX / IECEx Zones 1, 21
• Ex II 2GD Ex d IIC T4 Gb (Ta= -40°C to +65°C)	• ATEX / IECEx Zones 2, 22
• Ex t IIIC T135°C Db IP 6X (Ta = -40°C to +65°C)	• IP66 / 67
• Ex II 2GD Ex d IIC T5 Gb (Ta= -40°C to +42°C)	• IK08
• Ex t IIIC T100°C Db IP 6X (Ta = -40°C to +42°C)	• 5yr full performance warranty
• L70 rated for 150,000+ hours @ 25°C ambient	• RoHS compliant

*All features not available on every model. Please refer to product part number pages for model specifics.

Mechanical Information	
Fixture weight:	7.48 kg (16.5 lbs)
Shipping weight:	8.39 kg (18.5 lbs)
Mounting:	Supplied with stirrup mounting bracket
Cabling:	Factory installed 3 meter SWB cable

Specifications			
Voltage options:	100 - 277V AC, 50/60 Hz	**Housing:**	Powder coated aluminium
Operating temp:	-20°C to +65°C (-40°F to +149°F)	**Lens:**	Toughened glass
Power factor:	>0.9		
THD:	<15%		
Surge protection:	1 kV line to line, 2 kV line to ground		

Comparison			
	Warranty	**L70**	**T-Rating**
Dialight Area Light	5yr	>150,000	T5
Metal Halide	1	15,000	T3
High Pressure Sodium	1	20,000	T2A

Lumens	Wattage	Lm/W	Mounting Heights
3,700	70	53	6m and under

Dimensions

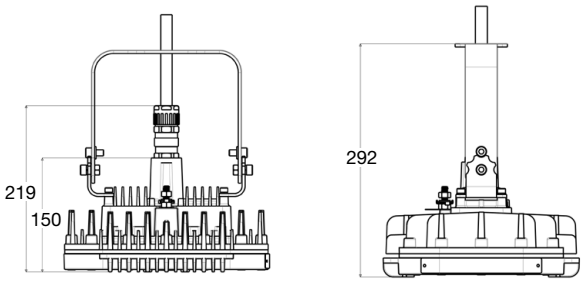

Standard Dimensions

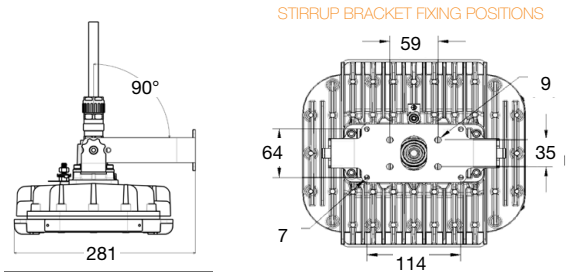

Stirrup Bracket Dimensions

Dimension are in mm

Light Distribution Pattern

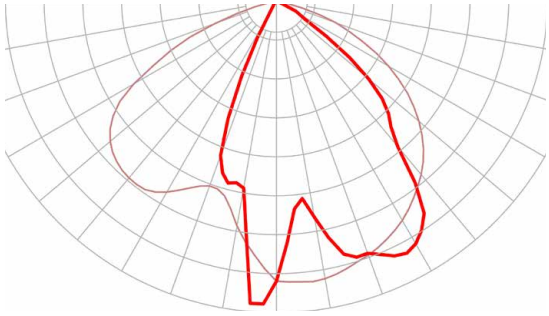

180° Pattern Mounted at 45°

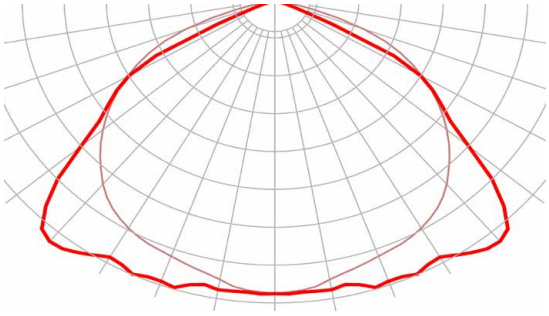

360° Pattern

Resources:
Datasheet: /www.dialight.com/Assets/Brochures_And_Catalogs/Illumination/MDTFHZSAAEUX001.pdf • Case Studies, IES Files, LM79 Reports: www.dialight.com/Document/Index/710

SafeSite® LED Area Light - Amber

Ordering Information and Mounting Accessories

Part Number	Initial Fixture Lumens	Wattage	Lm/W	IP Rating	Voltage	Colour Temperature (CCT)	Lens	Light Distribution
Standard Mount								
HZA9A2N	3,700	70	53	IP66/67	100 - 277V AC	Amber	Toughened glass	360°

[1]All values typical unless otherwise stated. Lumen values are typical (tolerance + / - 10%)
[2]180° light distribution pattern models are optimized for a 45° mounting angle.

Dimensions

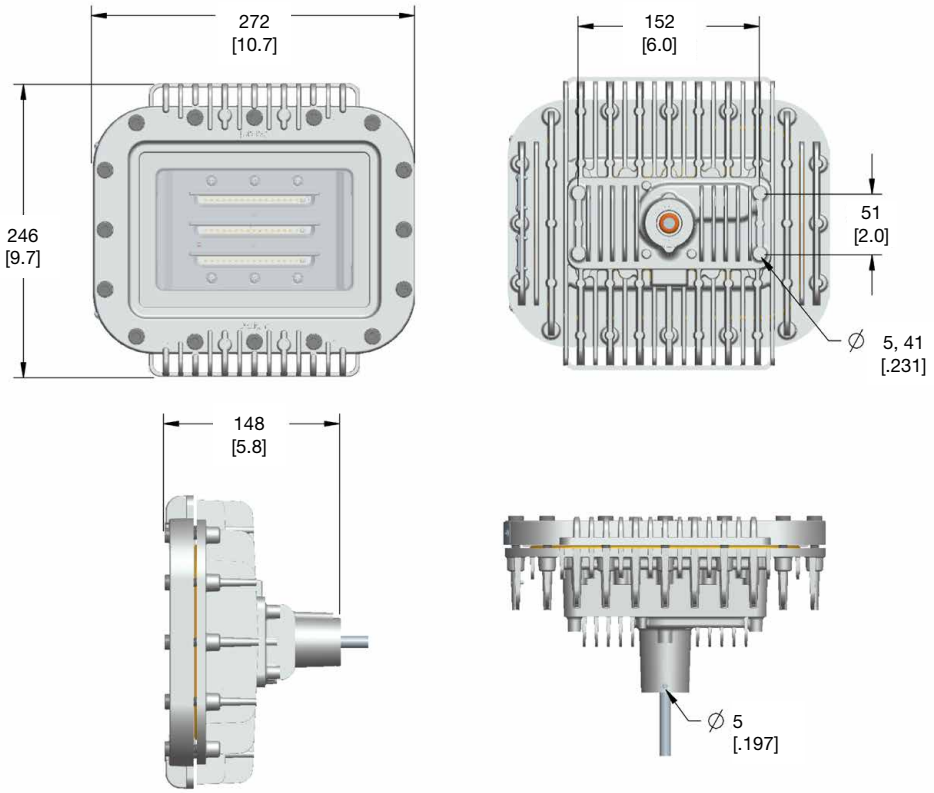

Dimension are in mm

SafeSite® LED Bulkhead

for Hazardous Applications



Ratings and Certifications	
• CE (EN61547:2009, EN55015:2006)	• ATEX / IECEx Zones 1, 21
• Ex d e mb IIC T6 Gb (11W / 22W)	• ATEX / IECEx Zones 2, 22
• Ex tb IIIC T85°C Db II 2GD (11W / 22W)	• IP66 / 67
• Ex d e mb IIC T5 Gb (34W)	• IK09 EN 50102
• Ex tb IIIC T100°C Db II 2GD (34W)	• 5yr full performance warranty
• L70 rated for 150,000+ hours @ 25°C ambient	• RoHS compliant
• ABS Design Assessed #11-LD678508-1	

*All features not available on every model. Please refer to product part number pages for model specifics.

Mechanical Information	
Fixture weight:	
Standard & Amber Models	
11W & 22W:	4.70 kg (10.3 lbs)
34W:	4.85 kg (10.7 lbs)
Emergency Models	
13W & 24W:	4.70 kg (10.3 lbs)
34W:	4.85 kg (10.7 lbs)
Cable Entry:	All cable entries are drilled and tapped

Specifications			
Voltage options:		**Housing:**	Copper free aluminium
Standard & Amber Models		**Power factor:**	>0.9
11W & 22W:	100 - 277V AC, or 24-48V DC	**THD:**	<15% at 120V AC
34W:	100 - 277V AC		<20% at 230V AC
Emergency Models		**Lens:**	High impact resistant glass
13W & 24W:	90 - 132V AC or 207 - 264V AC		Clear glass or frosted glass
36W:	207 - 264V AC	**CRI:**	70
Operating temp:		**CCT:**	4300K (neutral white)
Standard & Amber Models		Emergency Models	
11W & 22W:	-40°C to +60°C	**Battery**	
34W:	-40°C to +50°C	**13W & 24W:**	3.6V 4Ah NiMH
Emergency Models		**34W:**	3.6V 10Ah NiMH
13W & 24W:	-0°C to +50°C (-20°C option available)	**Expected Battery Life:**	4 years
34W:	-0°C to +40°C	**Battery Duration:**	180 Minutes @ lowest rated temperature
Surge protection:	EN 61000-4-5 1 kV line to line, 2 kV line to ground		

Comparison	Warranty	L70	T-Rating
Dialight Bulkhead	5yr	>150,000	T6
Metal Halide	1	15,000	T2
High Pressure Sodium	1	20,000	T2A
Fluorescent	1	24,000	T3

Lumens	Wattage	Lm/W	Mounting Heights
2,250	34	66	6m
2,150	34	63	
1,200	22	55	
600	11	55	3m

Light Distribution Pattern

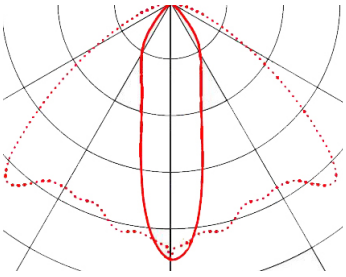

Oval Light Pattern (55° x 35°)

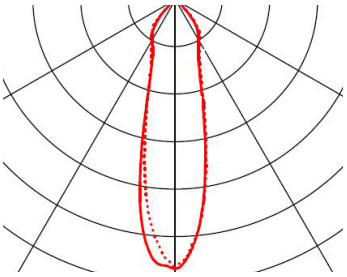

Narrow Light Pattern

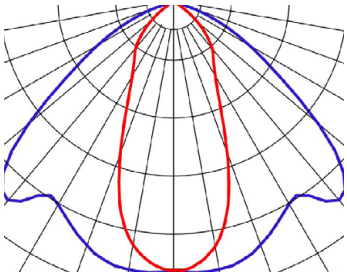

Oval Light Pattern (35° x 55°)

Resources:
Datasheet: www.dialight.com/Assets/Brochures_And_Catalogs/Illumination/MDEXWPXW001.pdf • Case Studies, IES Files, LM79 Reports: www.dialight.com/Document/Index/709

SafeSite® LED Bulkhead

Mounting Accessories

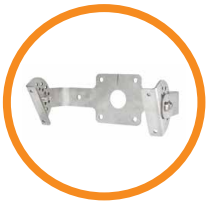

WP-BRKT-SS-ADJ

- Adjustable bracket
- Includes self-tapping screws



WP-STMB-LG00- 10

- Stanchion mount 90° right angle, 50mm NB



WP-STMB-LG85-50

- Non threaded bore 34mm diameter



WP-STMB-LG25-10

- Stanchion mount 25° right angle, 50mm NB

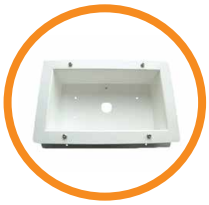

WP-RECESS-WH

- Recessed housing
- Bracket to fixture hardware



WP-BRKT-LG-PF

- Pipe and flush bracket
- Includes self-tapping screws



WPX-000799-BAT

- 4Ah 3.6V Battery module
- Replacement battery kit
- Battery backup models only

Dimensions

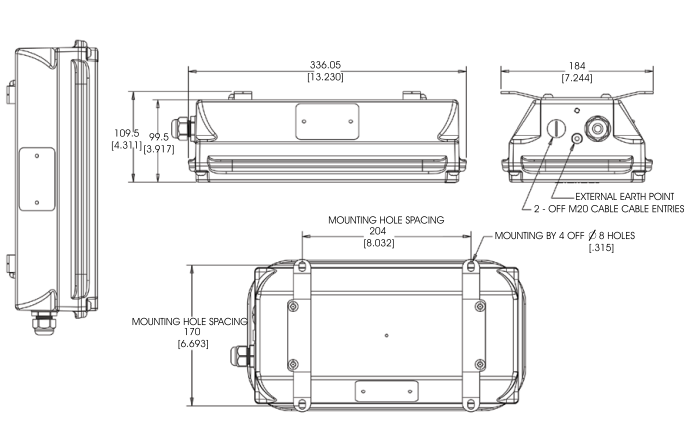

Dimension are in mm [inches]

*Shown with Flush mounting bracket

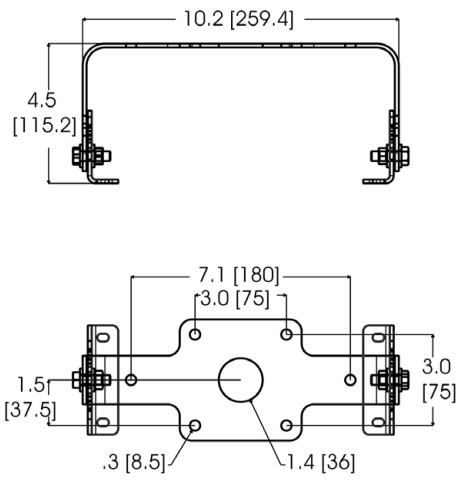

WP-BRKT-SS-ADJ

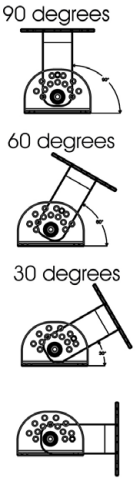

SafeSite® LED Bulkhead

Mounting Accessories

Without Bracket	30° Angle Bracket	Flush Bracket

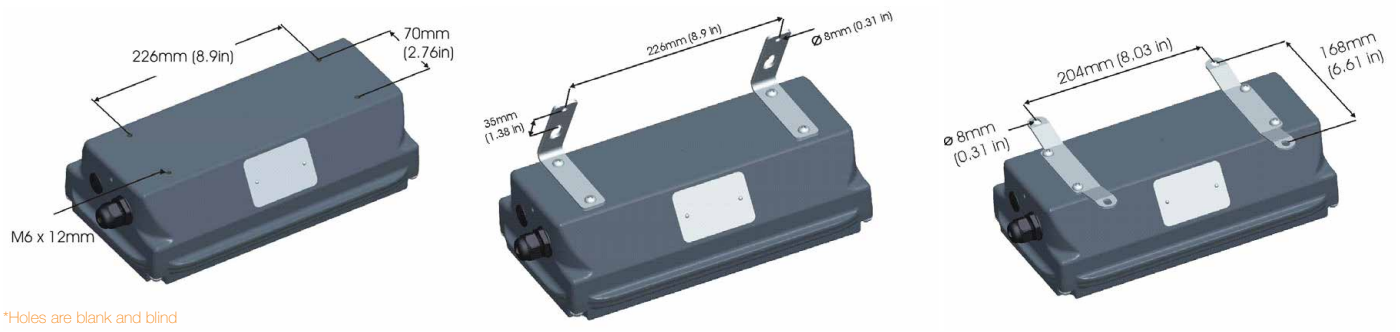

*Holes are blank and blind

Standard Option	Option "E"	Option "R"	Option "H"



2 Entries One Side

2 Entries One Side, 1 Entry Opposite Side. Add E to the end of the order code

Add R to the end of the order code

2 Entries One Side, 2 Entries Opposite Side and 1 Entry in the Rear. Add H to the end of the order code.



WP-LM-FE-TRM-AU

- Man, arrow right
- Kit includes: emergency sign, sign bracket, mounting hardware



WP-LM-FE-TLM-AU

- Man, arrow left
- Kit includes: emergency sign, sign bracket, mounting hardware



WP-LM-FE-LM-AU

- Man, left
- Kit includes: emergency sign, sign bracket, mounting hardware



WP-LM-FE-RM-AU

- Man, right
- Kit includes: emergency sign, sign bracket, mounting hardware

WP-STMB-LG00-XX



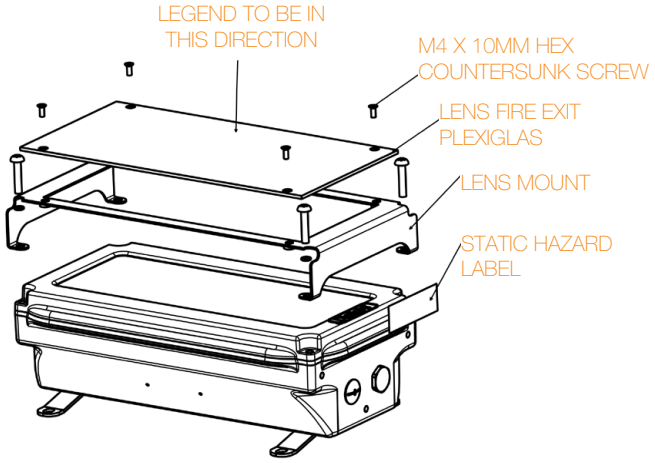

SafeSite® LED Bulkhead

Ordering Information

Part Number	Initial Fixture Lumens	Wattage	Lm/W	IP Rating	Voltage	Colour Temperature (CCT)	Lens	Light Distribution
Standard Models - 100 - 277V AC								
WPA-2N3L-NLGC	2,250	34	66	IP66/67	100 - 277V AC	4300K (neutral white)	Clear tempered glass	Wide
WPA-4N3L-NLGC	2,250	34	66	IP66/67	100 - 277V AC	4300K (neutral white)	Clear tempered glass	Oval (35° X 55°)
WPA-5N3L-NLGC	2,150	34	63	IP66/67	100 - 277V AC	4300K (neutral white)	Clear tempered glass	Oval (55° X 35°)
WPA-2N3H-NLGC	1,200	22	55	IP66/67	100 - 277V AC	4300K (neutral white)	Clear tempered glass	Wide
WPA-4N3H-NLGC	1,200	22	55	IP66/67	100 - 277V AC	4300K (neutral white)	Clear tempered glass	Oval (35° X 55°)
WPA-5N3H-NLGC	1,200	22	55	IP66/67	100 - 277V AC	4300K (neutral white)	Clear tempered glass	Oval (55° X 35°)
WPA-2N3C-NLGC	600	11	55	IP66/67	100 - 277V AC	4300K (neutral white)	Clear tempered glass	Wide
WPA-4N3C-NLGC	600	11	55	IP66/67	100 - 277V AC	4300K (neutral white)	Clear tempered glass	Oval (35° X 55°)
WPA-5N3C-NLGC	600	11	55	IP66/67	100 - 277V AC	4300K (neutral white)	Clear tempered glass	Oval (55° X 35°)
Standard Models - 24 - 48V DC								
WPA-4N2H-NLGC	1,200	22	55	IP66/67	24 - 48V DC	4300K (neutral white)	Clear tempered glass	Oval (35° X 55°)
Emergency Models - 207 - 264V AC								
WEA-2N4L-NLGC	2,250	36	62	IP66/67	207-264V AC	4300K (neutral white)	Clear tempered glass	Wide
WEA-4N4L-NLGC	2,250	36	62	IP66/67	207-264V AC	4300K (neutral white)	Clear tempered glass	Oval (35° X 55°)
WEA-5N4L-NLGC	2,150	36	60	IP66/67	207-264V AC	4300K (neutral white)	Clear tempered glass	Oval (55° X 35°)
WEA-2N4H-NLGC	1,200	24	55	IP66/67	207-264V AC	4300K (neutral white)	Clear tempered glass	Wide
WEA-4N4H-NLGC	1,200	24	50	IP66/67	207-264V AC	4300K (neutral white)	Clear tempered glass	Oval (35° X 55°)
WEA-5N4H-NLGC	1,200	24	50	IP66/67	207-264V AC	4300K (neutral white)	Clear tempered glass	Oval (55° X 35°)
WEA-2N4C-NLGC	600	13	46	IP66/67	207-264V AC	4300K (neutral white)	Clear tempered glass	Wide
WEA-4N4C-NLGC	600	13	46	IP66/67	207-264V AC	4300K (neutral white)	Clear tempered glass	Oval (35° X 55°)
WEA-5N4C-NLGC	600	13	46	IP66/67	207-264V AC	4300K (neutral white)	Clear tempered glass	Oval (55° X 35°)
Emergency Models - 90-132V AC								
WEA-2N5H-NLGC	1,200	24	55	IP66/67	90-132V AC	4300K (neutral white)	Clear tempered glass	Wide
WEA-4N5H-NLGC	1,200	24	50	IP66/67	90-132V AC	4300K (neutral white)	Clear tempered glass	Oval (35° X 55°)
WEA-5N5H-NLGC	1,200	24	50	IP66/67	90-132V AC	4300K (neutral white)	Clear tempered glass	Oval (55° X 35°)
WEA-2N5C-NLGC	600	13	46	IP66/67	90-132V AC	4300K (neutral white)	Clear tempered glass	Wide
WEA-4N5C-NLGC	600	13	46	IP66/67	90-132V AC	4300K (neutral white)	Clear tempered glass	Oval (35° X 55°)
WEA-5N5C-NLGC	600	13	46	IP66/67	90-132V AC	4300K (neutral white)	Clear tempered glass	Oval (55° X 35°)
Amber Models - 207-264V AC								
WPA-2A3H-NLGC		22		IP66/67	207-264V AC	Amber	Clear tempered glass	Narrow
WPA-4A3H-NLGC		22		IP66/67	207-264V AC	Amber	Clear tempered glass	Oval (35° X 55°)
WPA-5A3H-NLGC		22		IP66/67	207-264V AC	Amber	Clear tempered glass	Oval (55° X 35°)
WPA-2A3C-NLGC		11		IP66/67	207-264V AC	Amber	Clear tempered glass	Narrow
WPA-4A3C-NLGC		11		IP66/67	207-264V AC	Amber	Clear tempered glass	Oval (35° X 55°)
WPA-5A3C-NLGC		11		IP66/67	207-264V AC	Amber	Clear tempered glass	Oval (55° X 35°)

All values typical unless otherwise stated, Lumen values are typical (tolerance +/- 10%).
Standard models only:
Models shown are for neutral, no bracket, clear glass
For cool white models replace the 5th character with an **C** Ex: WEA-2**N**4L-NLGC becomes WEA-2**C**4L-NLGC
All models:
Angle bracket replace the 10th character with an **A** Ex: WEA-2N4L-**N**LGC becomes WEA-2C4L-**A**LGC
Flush bracket replace the 10th character with an **F** Ex: WEA-2N4L-**N**LGC becomes WEA-2C4L-**F**LGC
Frosted glass models replace the 13th character with an **F** Ex: WEA-2N4L-NLG**C** becomes WEA-2C4L-NLG**F**
For the -20°C option models add -20 to the ordering code Ex: WEA-2N4L-NLGC becomes WEA-2C4L-NLGC**-20**

StreetSense® LED Street Light

for Infrastructure Solutions



Ratings and Certifications
• CE
• ATEX / IECEx
• IP66 / 67
• NEMA 4X
• RoHS compliant
• 7yr full performance warranty

*All features not available on every model. Please refer to product part number pages for model specifics.

Mechanical Information	
Fixture weight:	1 light engines: 7.26kg (16 lbs) 2 light engines: 11.34kg (25 lbs) 3 light engines: 15.42kg (34 lbs)
Mounting:	Accommodates 31.75mm (42.16mm OD) - 50.8mm (60.32mm OD) pipe. Provision for adjustment of +/- 5° at 2.5° increments

Specifications			
Voltage options:	100 - 277V AC	**Housing:**	Aluminium alloy A360
Operating temp:	-40°C to +65°C	**Lens:**	Optically optimized tempered glass
Power factor:	>0.9	**CRI:**	70
THD:	<15%	**CCT:**	4300K (neutral white)
Surge protection:	Open circuit surge protection 6kV standard per ANSI/IEEE C62.41. 2.2002 cat C low or Open circuit surge protection 10kV standard per ANSI/IEEE C62.41. 2.2002 cat C high		

Comparison		
	Warranty	**L70**
Dialight Street Light	7yr	>100,000
Metal Halide	1	15,000
High Pressure Sodium	1	20,000

Lumens	Wattage	Lm/W	Mounting Heights
20,250	252	80	17m
16,000	190	84	
10,900	131	83	
6,800	83	82	
5,500	65	85	5m

Dimensions

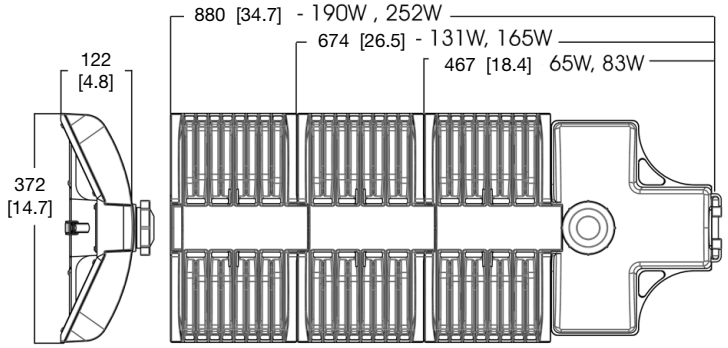

Dimension are in mm [inches]

Light Distribution Pattern

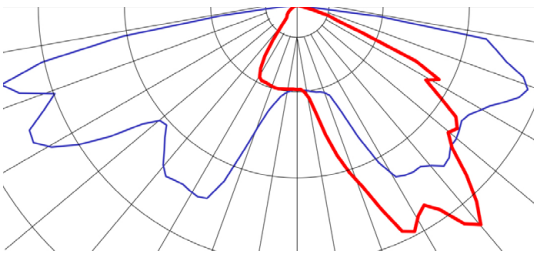

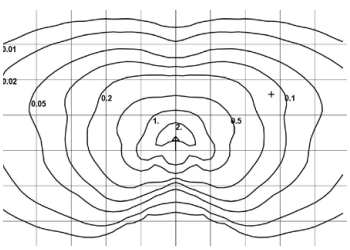

Type III

Resources:
Datasheet: http://www.dialight.com/Assets/Brochures_And_Catalogs/Illumination/MDTFSL3X001.pdf • Case Studies, IES Files, LM79 Reports: www.dialight.com/Document/Index/713

StreetSense® LED Street Light

Ordering Information and Mounting Accessories

Part Number	Initial Fixture Lumens	Wattage	Lm/W	Lens
Standard Models - ATEX / IECEx Zone 2				
SLA3N4SG	20,250	252	80	Tempered glass
SLA3N4HG	10,900	131	83	Tempered glass
Standard Models - Type III				
SL3C5SLGG	20,750	246	84	Tempered glass
SL3C5RLGG	17,000	189	90	Tempered glass
SL3C5HLGG	11,500	126	91	Tempered glass
SL3C5CLGG	5,700	63	90	Tempered glass

[1]All values typical unless otherwise stated, Lumen values are typical (tolerance +/- 10%).

Obstruction LED Lighting Solutions

FAA Approved Obstruction Lighting Solutions



Red LED Systems: L-864 and L-810

Features & Benefits

- Integrated controller
- Full 5 year performance warranty
- Universal 120-240V AC input
- Controller can be mounted at the base of the structure
- NEMA 4x outdoor rated enclosure (pending)
- Wide temperature range: -40°C to +55°C
- Configurable flash rates (20, 30, or 40 flashes per min)
- Ability to operate lights in steady or flashing mode
- Optional infrared light fixtures
- Light weight design
- Low power consumption
- IP66 rated light fixtures
- Impact and vibration resistant
- Provision for padlock on the enclosure
- Dry contacts for alarm monitoring/status
  - Photocell alarm
  - L-810/L-864 light alarms
  - Operation mode (day/night)
- Can control and monitor maximums of:
  - Sixteen (16) L-810 side markers or
  - Eight (8) L-810 side markers and one (1) L-864 beacon



Dual (Red / White) LED Systems: L-865 and L-864

Features & Benefits

- Infrared (IR) version available for improved visibility to Night Vision Goggles
- Optional Ethernet/Cellular based remote monitoring/ control system available
- Ability to flash side markers
- Integrated controller with LCD back-lit display
- Full 5 year performance warranty
- Universal 120-240V AC input or +/- 48 V DC input
- Controller can be mounted at the base of the structure
- NEMA 4x outdoor rated enclosure
- Wide temperature range: -40°C to +55°C
- Light weight design
- Low power consumption
- IP66 rated light fixtures
- Impact and vibration resistant
- Provisions for padlock on the enclosure
- Dry contacts for alarm monitoring/status
  - Photocell alarm
  - White mode alarm
  - Power fail
  - L-810/L-864/L-865 light alarms
  - Red mode alarm
  - Communication
  - Operation mode (day/night)
  - Sync alarm



White LED Systems: L-865

Features & Benefits

- Integrated controller with LCD back-lit display
- Optional Ethernet/Cellular based remote monitoring/ control system available
- Full 5 year performance warranty
- Universal 120-240V AC input or 48 V DC input
- Controller can be mounted at the base of the structure
- NEMA 4x outdoor rated enclosure
- Wide temperature range: -40°C to +55°C
- Light weight design
- Low power consumption
- IP66 rated light fixtures
- Impact and vibration resistant
- Provisions for padlock on the enclosure
- Dry contacts for alarm monitoring/status
  - Photocell alarm
  - White mode alarm
  - Power fail
  - L-865 light alarms
  - Communication
  - Operation mode (day/night)
  - Sync alarm



High Intensity LED Systems: L-856 / L-864

Features & Benefits

- Integrated controller
- Full 5 year performance warranty
- Universal 208-277V AC input
- Controller can be mounted at the base of the structure
- NEMA 4x outdoor rated enclosures
- Wide temperature range: -40°C to +55°C
- Low power consumption
- IP66 rated light fixtures
- Impact and vibration resistant
- Provision for padlock on the enclosure
- Dry contacts for alarm monitoring/status
  - Photocell alarm
  - White mode alarm
  - Power fail
  - Red mode alarm
  - Communication
  - Operation mode (day/night)
  - Sync alarm

Obstruction LED Lighting Solutions

FAA Approved Obstruction Lighting Solutions



Vigilant LED Based L-856 / L-864

High Intensity (White / Red) Strobe

Effective Intensity:	White Day - 270,000 cd White Twilight - 20,000 cd White or Red Night - 2,000 cd
Wattage:	White Day - 220W White Twilight - 40W White or Red Night - 30W
Input Voltage:	208 - 277V AC



Vigilant LED Based L-865 / L-864 (+IR)

Medium Intensity (White/Red) Strobe - Infrared (IR) available

Effective Intensity:	White Day - 20,000 cd White Night - 2,000 cd Red Night - 2,000 cd
Wattage:	White Day - 36W (system = 75W) White Night - 4W (system = 10W) Red Night - 12W (system = 25W)
Input Voltage:	120 - 240V AC or +/- 48V DC



Vigilant LED Based L-864 (+IR)

Medium Intensity (Red) Beacon - Infrared (IR) available

Effective Intensity:	2,000 cd
Wattage:	3.3W (16.7% duty circle) - standard 7.0W (16.7% duty circle) - IR model 20 flashes per minute with 0.5 sec. on time
Input Voltage:	120 - 240V AC or 24 - 48V DC

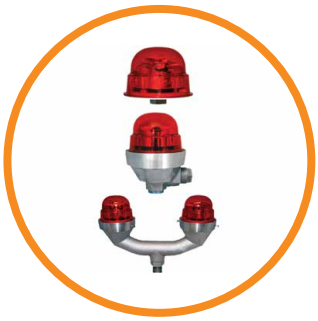

Vigilant LED Based L-810

Low Intensity (Red) RTO Side Light - Infrared (IR) available

Effective Intensity:	32.5 cd
Wattage Range:	1.5 - 9.0W
Input Voltage:	12 - 48V DC / 120 - 240V AC / 277V AC



Vigilant LED Based L-810

Low Intensity (Red) Side Light

Effective Intensity:	32.5 cd
Wattage Range:	13 - 24W
Input Voltage:	12 - 48V DC / 120V AC / 230 V AC

Dialight



Western Australia - Head Office
38 O'Malley St, Osborne Park WA 6017, Australia
Tel: 1300 657 147
Fax: +61 - 08 9244 7601
www.dialight.com.au | info@dialight.com

New South Wales
Greg Sutton
Tel: 1300 657 147 Fax: +61 - 08 9244 7601
www.dialight.com.au | gsutton@dialight.com.au

Queensland
Jason Atkins
Tel: 1300 657 147 Fax: +61 - 08 9244 7601
www.dialight.com.au | jatkins@dialight.com.au

Victoria/Tasmania
Shane Vry
Tel: 1300 657 147 Fax: +61 - 08 9244 7601
www.dialight.com.au | svry@dialight.com.au

South Australia/Northern Territory
George Harasymyszyn
Tel: 1300 657 147 Fax: +61 - 08 9244 7601
www.dialight.com.au | georgeh@dialight.com.au

New Zealand Distributor - Infinity Lighting
Tel: +64 7 544 7400 Fax: +64 - 7 544 7401
35c Koromiko st
Tauranga, 3116, New Zealand

North American HQ
1501 Route 34 South
Farmingdale, NJ 07727
Tel: 732-919-3119
Fax: 732-751-5778
info@dialight.com

Houston office
16830 Barker Springs Rd
Ste 407
Houston, TX 77084

Brazil
Av. Joao Antonio Meccatti,
1601 – Galpao 07 – Jd Planalto
Jundiai – SP – 13211-223
Tel: +55 (11) 4431-4300
Fax: +55 (11) 4431-4300
vendas.brasil@dialight.com

Copenhagen
Ejby Industrivej 91 B
2600 Glostrup
Tel: +45 8877 4400
Fax: +45 3582 0099
info-dk@dialight.com

EMEA HQ
Exning Road, Newmarket
Suffolk, England, CB8 0AX
Tel: +44 (0) 1638 665161

Middle East office
Level 42
Emirates Towers (Office Tower)
Sheikh Zayed Road
Dubai, United Arab Emirates
Tel: +971(0)4319 7686

Southeast Asia office
240 Macpherson Road
#07-05 Pines Industrial Building
Singapore 348574

MDTFSHCATAUHX001_I_April2016