

12.2 Size K62

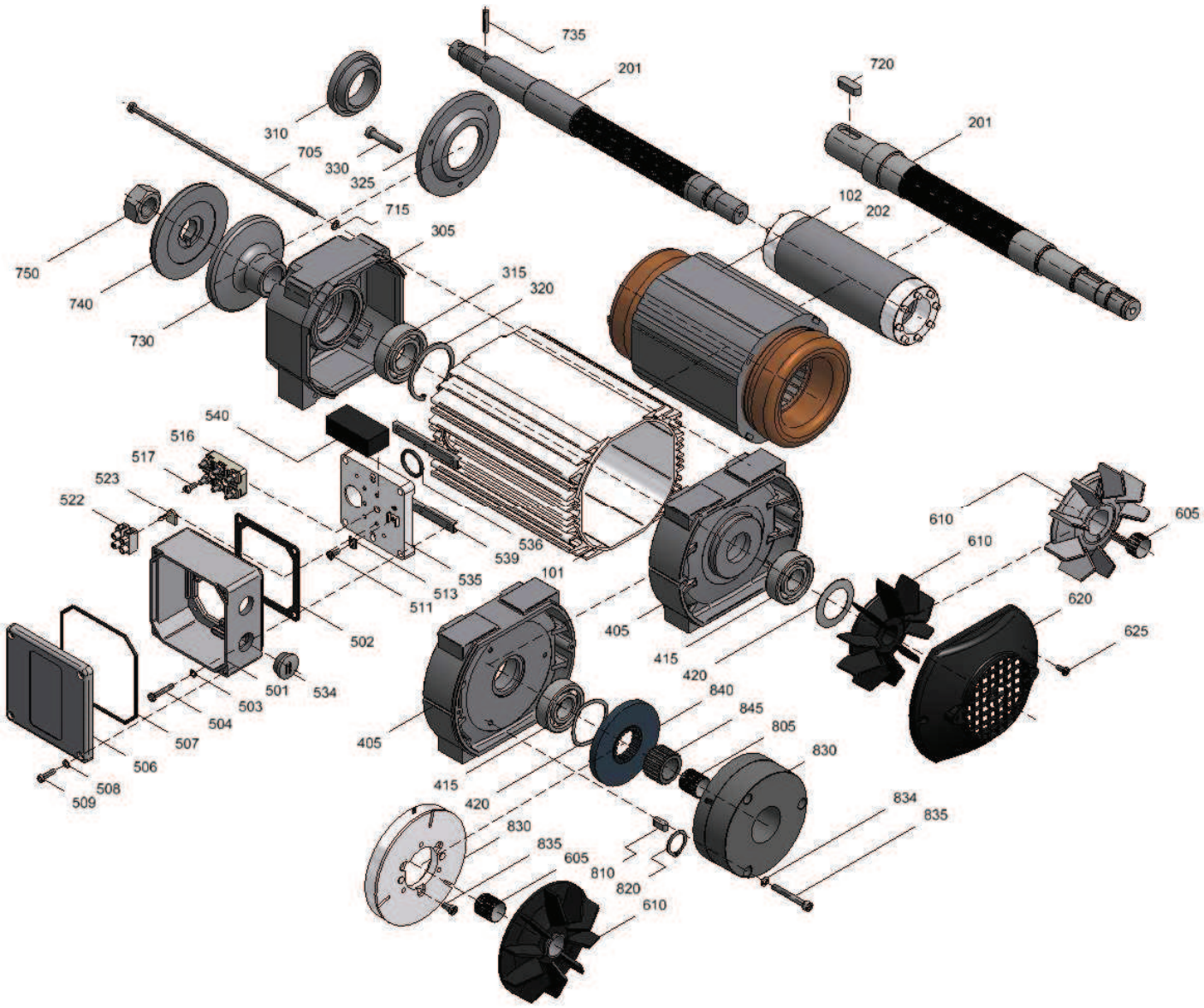

Pos.	Description	Pos.	Description	Pos.	Description
101	Stator box	506	Terminal box cover	620	Fan cover
102	Stator package	507	Seal	625	Screw
201	Rotor shaft	508	Circlip	705	Tension screw
202	Rotor package	509	Screw	715	Washer
305	End shield AS	511	Screw	720	Parallel key
310	Labyrinth ring	513	Clamp strap	730	Flange with neck
315	Bearing	516	Clamping plate	735	Cylinder bolt
320	Locking ring	517	Screw	740	Flange
325	Bearing cover	522	Terminal strip	750	Nut
330	Screw	523	Terminal strip holder	805	Tolerance ring
405	End shield BS	534	Locking screw	810	Parallel key
415	Bearing	535	Terminal box socket	820	Locking ring
420	Disc spring	536	O-ring	830	Brake complete
501	Terminal box base	539	Thread plate	834	Washer
502	Seal	540	Rectifier	835	Screw
503	Circlip	605	Tolerance ring	840	Friction disc
504	Screw	610	Fan	845	Cam