REV.	DATE	DESCRIPTION OF CHANGE	BY	APP'D

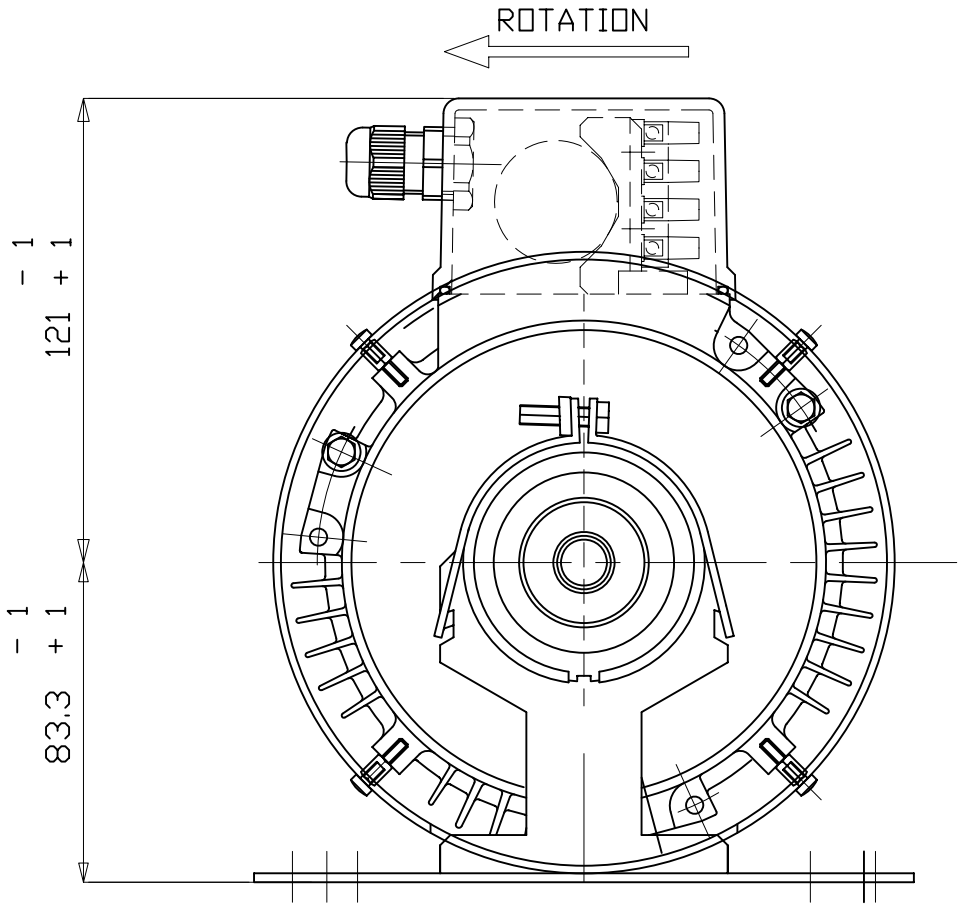

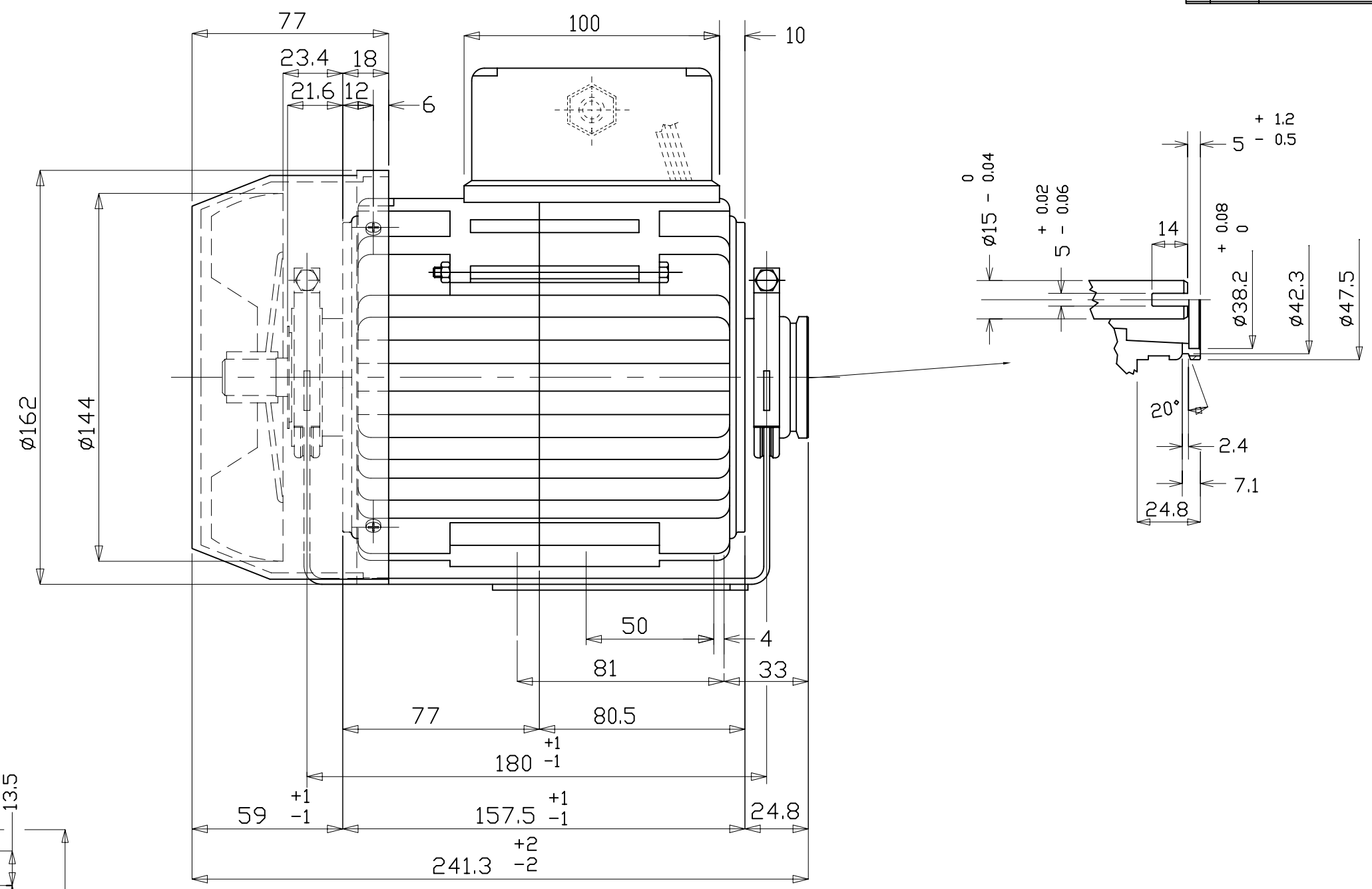

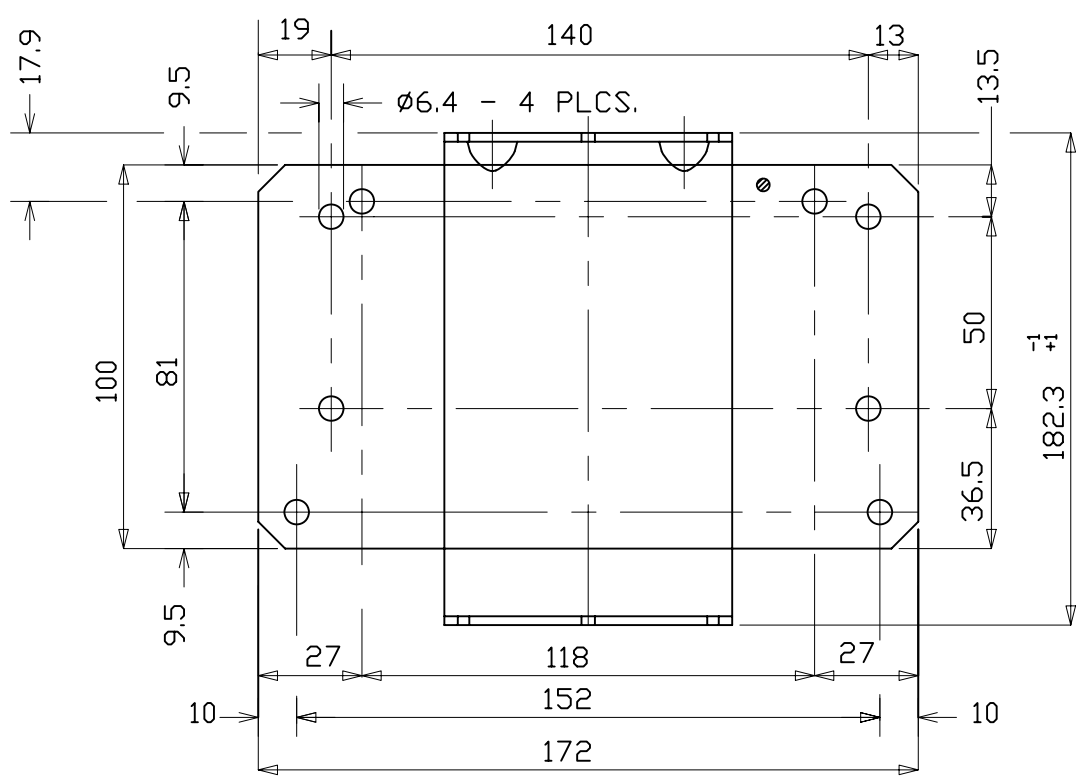

INTERNAL CONNECTIONS BOX

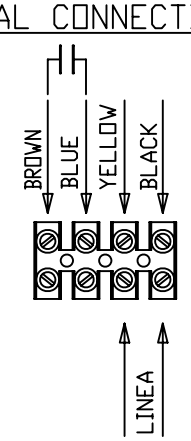

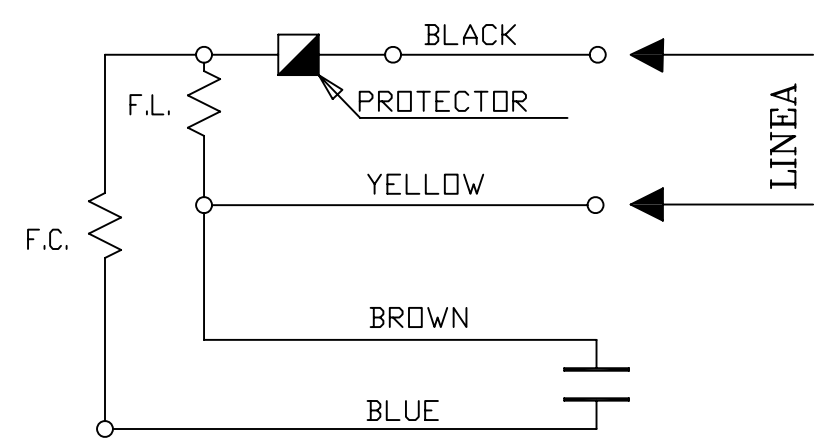

712	RPM	110827.00	CLOSED	F	230 (VAC)	50 (Hz)	1360 (RPM)	CW	4.2	3/4	IP55
MODEL NO.	SUPPLIER	SUPPLIER MODEL NO.	MOTOR TYPE	INSULATION CLASS	INPUT VOLTAGE (±10%)	INPUT FREQUENCY	MOTOR SPEED	ROTATION (VIEWED FROM SHAFT END)	RATED AMPS	HORSEPOWER	PROTECTION

ALL DIMENSIONS ARE IN MILLIMETERS

MATERIAL

THIRD ANGLE PROJECTION

UNLESS OTHERWISE SPECIFIED:
REMOVE BURRS AND SHARP EDGES.
MACHINED SURFACE ROUGHNESS
3.2 MICROMETERS Ra.
TOLERANCES:
.X ± 0.254
.XX ± 0.127
ANGULAR DIM. ± 1°

Procon Products
A Division of Roehlen Industries
Murfreesboro, Tennessee 37129
Standex company

TITLE: MOTOR, 230V, 50HZ, 3/4 HP

THIS DRAWING CONTAINS CONFIDENTIAL INFORMATION AND IS THE EXCLUSIVE PROPERTY OF PROCON. IT MAY NOT BE COPIED OR REPRODUCED, IN ANY FORM, WITHOUT THE EXPRESS WRITTEN AUTHORITY OF PROCON.

SCALE	DRAWN	DATE	DRAWING NO.
FULL	MEA	9-21-12	712
	CHECKED JJ	DATE 10-23-12	

DO NOT SCALE DRAWING — SHEET 1 OF 1