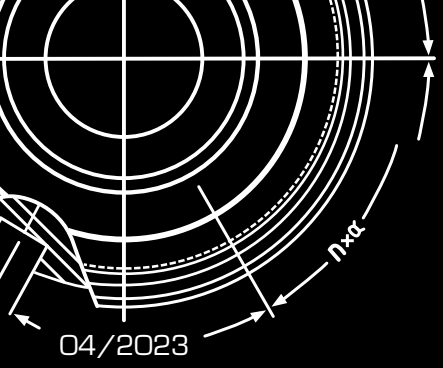

Mönninghoff

Electromagnetic tooth clutch
Type 546

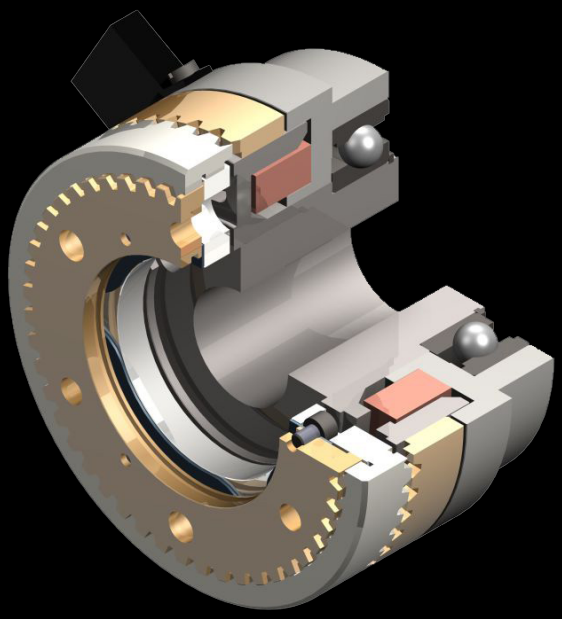

Mönninghoff

Electromagnetic tooth clutch - Type 546

Characteristics and features

- high torque transfer despite compact dimensions
- positive-locking transmission of torque without slip
- engageable also at low relative speed
- high range of temperatures
- easy control via direct current
- anti-magnetic toothing for optimized magnetic flux
- application-related customized tooth geometries
- short cycle times
- oil running or dry running
- also available as torque limiter
- synchronized switching with fixed engagement positions
- uncompromizing need for safety and reliability
- integrated, easy-to-assemble system solution
- condition monitoring on demand
- plug-and-play design available

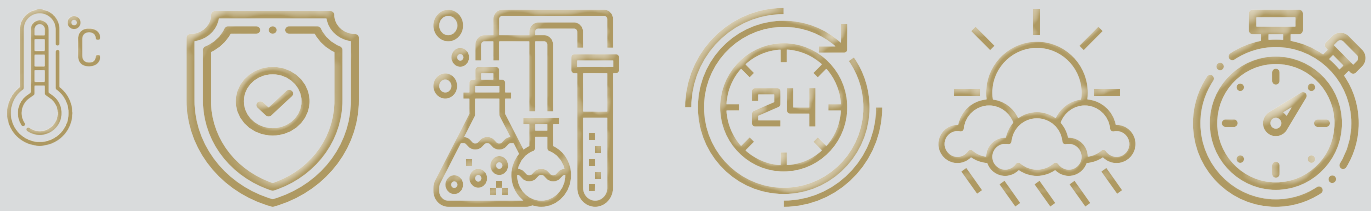

Mönninghoff power transmission represents an infinite variant diversity that is applied by all areas of modern mechanical engineering.

Our technologies are mostly designed to operate under extreme conditions. We offer high precision products for medical robotics, fail-proof security for aerospace technology or synchronization soultions for the packaging or printing industry.

We thus address customers who have the highest standards for their own machines or systems. To them, we can offer highly complex, application-specific solutions.

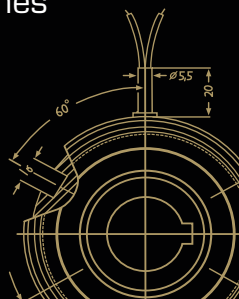

Mönninghoff

Electromagnetic tooth clutch - Type 546

Match code

Mönninghoff tooth clutches are indicated by the following match code:

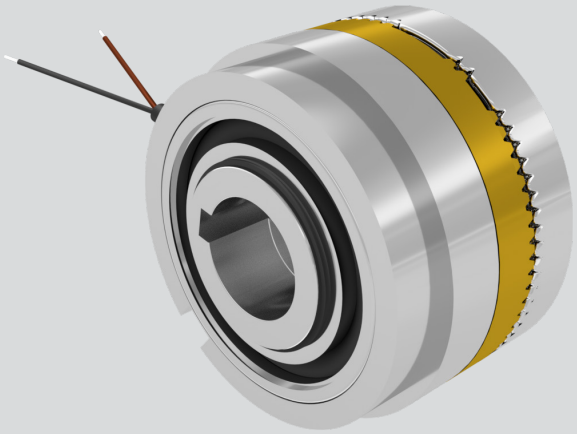

546 . A . B . C

A clutch size
B design of stator
C design of armature

Other individual characteristics:

- toothing geometries
- voltage
- bore size with keyway

According to these characteristics, we design individual solutions concerning transmitted torque, engaging behavior or rotation speed.

Our engineers can assist with finding an application-specific clutch at any time. Together, we can develop individual and innovative solutions for extreme operating conditions.

Ordering example

Mönninghoff tooth clutch
Type 546.15.1.4

Toothing	saw teeth clockwise, single position
Voltage	24 Vdc
Bore size d	25 mm H7, keyway acc. to DIN 6885/1

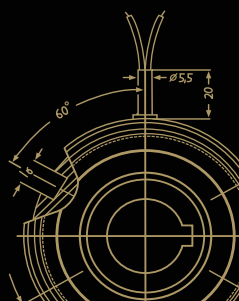

Electromagnetic tooth clutch - Type 546

Clutch size

When dimensioning a Mönninghoff tooth clutch, several technical preconditions should be considered:

- for the selection of the right size, not only the peak load but also the dynamic behavior of the drive have to be taken into account
- tooth clutches - contrary to friction clutches - must never be overloaded and safety factors must be considered
- generally, the selection of the right clutch is based on torque:

$$M = 9550 \frac{P}{n} \cdot K \text{ [Nm]}$$

$$M = (M_L + M_B) \cdot K \text{ [Nm]}$$

- the transmittable torque of the clutch must always be higher than the largest possible occuring torque:

$$\text{Requirement } M_{Ü} > M$$

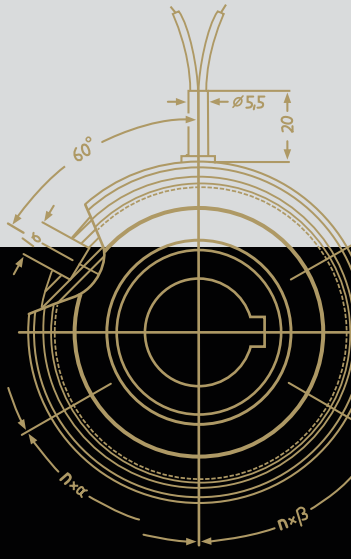

P = power of motor [kW]
n = rotating speed [min^{-1}]
K = safety factor 1,5 ... 2,5
M = required torque
M_L = load torque
M_B = acceleration torque
$M_Ü$ = nominal torque of clutch (see enclosed chart)

Mönninghoff

Electromagnetic tooth clutch - Type 546

Design of stator 1 & 2, flange mounted

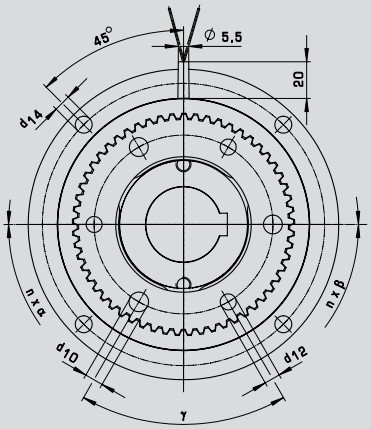

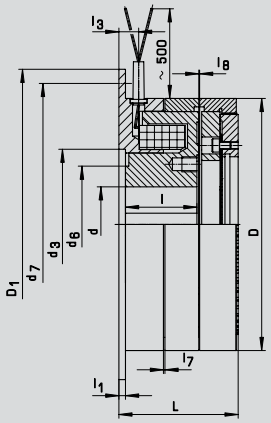

Type 1:
with flying leads

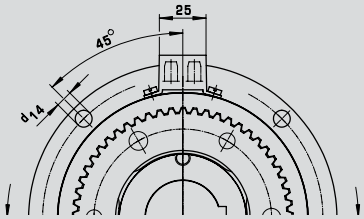

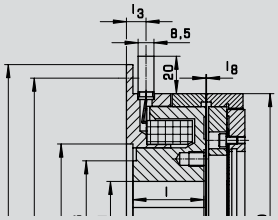

Type 2:
with plug and socket

Technical data of flange mounted types

Size			12	13	15	21	23	25	31	32
torque		M_0 [Nm]	20	25	50	100	250	500	1000	2200
max. speed		n [min^{-1}]	4800	4500	4500	4000	3500	3500	3000	3000
input power		P_{20} [W]	13	19	21	27	36	57	80	114
inertia	rotor	[10^{-3}kg m^2]	0,065	0,14	0,35	0,81	1,92	4,46	10,3	25,7
	armature 4 & 5		0,06	0,12	0,37	0,52	1,85	4,51	12,8	29,2
inertia	rotor	[10^{-3}kg m^2]	—	0,14	0,35	0,81	1,92	4,46	10,3	25,7
	armature 6 & 7		—	0,13	0,62	1,25	3,58	7,33	17,86	45,89
total weight	armature 4 & 5	[kg]	0,43	0,81	1,41	2,25	3,34	5,7	9,63	13,2
	armature 6 & 7		—	0,88	1,56	2,5	3,76	6,17	10,22	14,61
number of teeth	standard		200	220	260	290	280	250	195	186
	saw		25	30	36	36	38	40	40	40
min. bore, keyway acc. to DIN 6885/1	d H7	[mm]	10	10	15	20	25	30	40	45
max. bore, keyway acc. to DIN 6885/-			15	20/2	25	35	42	50	70	80
dimensions	D	[mm]	57	67	82	95	114	134	166	195
	D_1		70	85	100	125	140	165	195	230
	d_3 H8		26	35	42	52	62	80	100	125
	d_6		22	23	30	40	45	62	77	100
	d_7		63,5	76	92	112	125	150	180	215
	d_{14}		3,3	4,5	5,5	6,6	6,6	9	9	9
	L		32,5	36,5	41,5	48,5	53	63,5	72	86
	l -0,1		21,5	24,5	26	27,5	30,5	38	40,5	52
	l_1		2	2	2,5	3	3,5	3,5	4	4
	l_3		6,5	6,7	8	8,5	11	10,5	13	18,5
	l_7 ± 0,1		0,8	0,8	0,5	0,8	0,8	0,8	0,8	1,0
	l_8 ± 0,1		0,2	0,3	0,3	0,4	0,4	0,4	0,5	0,5

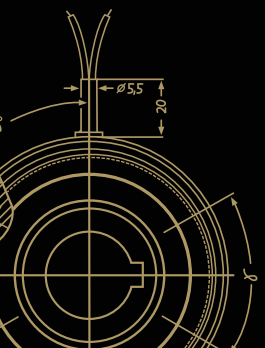

Mönninghoff

Electromagnetic tooth clutch - Type 546

Design of stator 3 & 4, bearing mounted

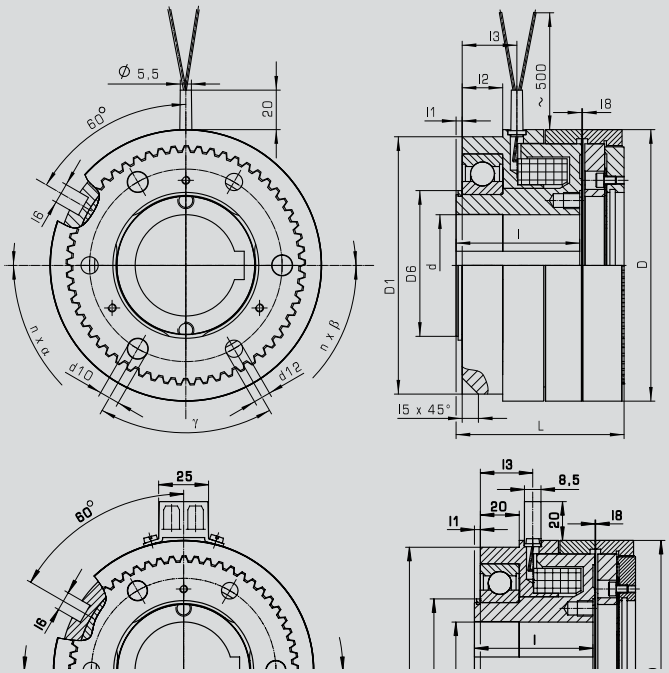

Type 3:
with flying leads

Type 4:
with plug and socket

Technical data for bearing mounted types

Size				12	13	15	21	23	25	31	32
torque			M_0 [Nm]	20	25	50	100	250	500	1000	2200
max. speed dry running			n [min^{-1}]	1500	1500	1500	1500	1500	1500	1500	1500
max. speed oil running			n [min^{-1}]	3000	3000	3000	2500	2500	2500	2300	2000
input power			P_{20} [W]	13	19	21	27	36	57	80	114
inertia	rotor		[10^{-3} kg m²]	0,066	0,15	0,37	0,87	2,06	4,88	11,2	28,7
	armature	4 & 5		0,06	0,12	0,37	0,52	1,85	4,51	12,8	29,2
inertia	rotor		[10^{-3} kg m²]	—	0,15	0,37	0,87	2,06	4,88	11,2	28,7
	armature	6 & 7		—	0,13	0,62	1,25	3,58	7,33	17,86	45,89
total weight	armature	4 & 5	[kg]	0,51	0,87	1,45	2,37	3,85	6,76	11,08	15,3
	armature	6 & 7		—	0,88	1,60	2,62	4,23	7,23	11,67	16,71
number of teeth	standard			200	220	260	290	280	250	195	186
	saw			25	30	36	36	38	40	40	40
dry running	2 RS DIN 625			6004	6005	6007	6009	6011	6014	6017	6020
oil running	DIN 625										
min. bore, keyway acc. to DIN 6885/1		d H7	[mm]	10	10	10	20	25	30	40	50
max. bore, keyway acc. to DIN 6885/-				14/3	17/2	25/2	35/2	42/2	55/2	70/3	85/3
dimensions		D	[mm]	57	67	82	95	114	134	166	195
		D_1		52	58	75	88	105	127	152	175
		d_5		36	46	60	70	80	95	120	150
		d_6		20	25	35	45	55	70	85	100
		L		43	49	55	63	69	83	93,5	110
		l - 0,1		34	39	42	45	50	61	66	80
		l_1		2	2,5	3,5	3	3	3	3,5	4
		l_2		10	11	12	14	18	20	22	24
		l_3		15	16,7	18	20	24	27	31	38,5
		l_5		4,5	5	6	6	6	8	10	10
		l_6		5	6	8	10	10	10	12	12
		l_8 ± 0,1		0,2	0,3	0,3	0,4	0,4	0,4	0,5	0,5

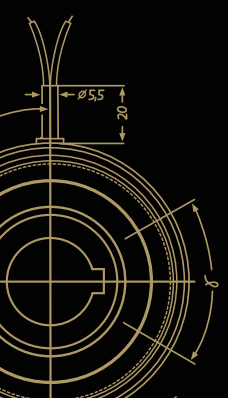

Mönninghoff

Electromagnetic tooth clutch - Type 546

Design of armatures

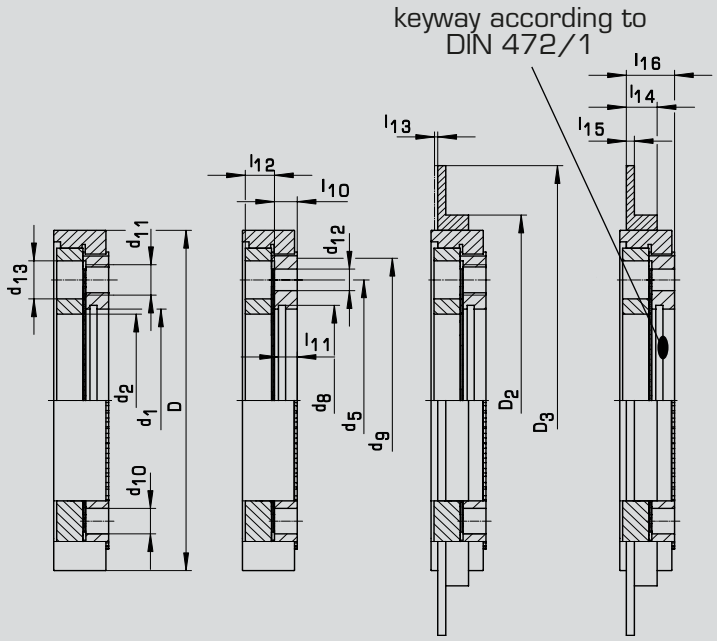

Type 4 Type 5 Type 6 Type 7

- Type 4
  with three threads and three pin bores for mounting
- Type 5
  with three through holes and three pin bores for mounting
- Type 6
  analog type 4, with additional indicator plate for condition monitoring
- Type 7
  analog type 5, with additional indicator plate for condition monitoring

Technical data for armatures

Size				12	13	15	21	23	25	31	32
dimensions		D	[mm]	57	67	82	95	114	134	166	195
		D_2		—	74	90	107	126	146	178	215
		D_3		—	90	115	130	165	185	218	250
		d_1 H7		26	32	42	52	62	72	90	100
		d_2		22,5	31	36,5	46	55	68	80	95
		d_5		36	46	60	70	80	95	120	150
		d_8	DIN 472 page 1	27,2	33,7	44,5	55	65	75	93,5	103,5
		d_9		45	54	69	80	93	110	140	170
	locating pin	d_{10}		—	4,5	4,5	5,5	7,8	9,5	9,5	11,5
		n x ß	[degree]	—	3 x 120°	3 x 120°	3 x 120°	3 x 120°	3 x 120°	3 x 120°	3 x 120°
	armature 4 & 6	d_{11}		M 4	M 5	M 6	M 8	M 8	M 12	M 12	M 12
		n x α	[degree]	3 x 120°	3 x 120°	3 x 120°	3 x 120°	3 x 120°	3 x 120°	6 x 60°	6 x 60°
	armature 5 & 7	d_{12}		4,8	4,8	5,8	6,8	6,8	8,5	8,5	10,5
		n x α	[degree]	3 x 120°	3 x 120°	3 x 120°	3 x 120°	3 x 120°	3 x 120°	6 x 60°	6 x 60°
		d_{13}		8,5	8,5	10	12	12	15	15	19
		y	[degree]	—	60°	60°	60°	60°	60°	30°	30°
		l - 0,1		21,5	24,5	26	27,5	30,5	38	40,5	52
		l_{10}		3	3,5	4,8	6	6,5	8,4	11,4	11,7
		l_{11}		2,6	2,7	4,05	5	5,5	7	8,5	9,5
		l_{12}		4,3	4,8	6,1	8,7	9	11	13,1	14
armature play		l_{13}		0,75	1,00	1,1	1,3	1,4	1,65	2,1	2,4
		l_{14}		—	6	8,5	10	10	11,5	11,5	16
		l_{15}		—	2	2,5	3	3	3	3	6
		l_{16}		—	7,5	10,8	13,5	14	18	23	23,5

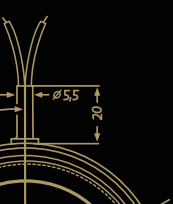

Mönninghoff

Electromagnetic tooth clutch - Type 546

Toothing geometries

Mönninghoff clutches offer a large variety of application-specific designs of toothing.

The amount of possible geometries or fixed points is endless and our engineers can help to design an optimized version at any time.

Toothing examples



Standard

- transmits torque in both directions with little backlash
- also available backlash free
- with increased flank angle also available as torque limiter with fixed position engagement



Spaced

- transmits torque in both directions with large amount of backlash
- can be engaged at higher speeds



Saw (counter-) clockwise

- transmits nominal torque in both directions
- in reverse direction approx. 10 % of torque can be transmitted
- can be engaged at higher speeds



Stepped (counter-) clockwise

- transmits nominal torque in both directions
- in reverse direction approx. 20 % of torque can be transmitted with little backlash
- can be engaged at higher speeds

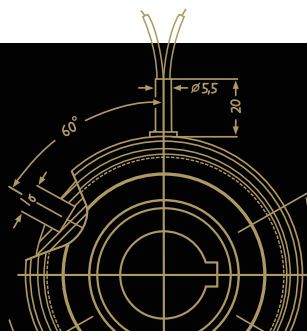

Mönninghoff

Electromagnetic tooth clutch - Type 546

Voltage

- standard voltage is 24 Vdc
- special voltages between 6 and 196 Vdc on request
- the permissible voltage tolerance is -10 % to +5 % according to VDE 0580
- in order to avoid induced voltage peaks, it is advisable to use varistors at unusually high switching frequency

At a glance

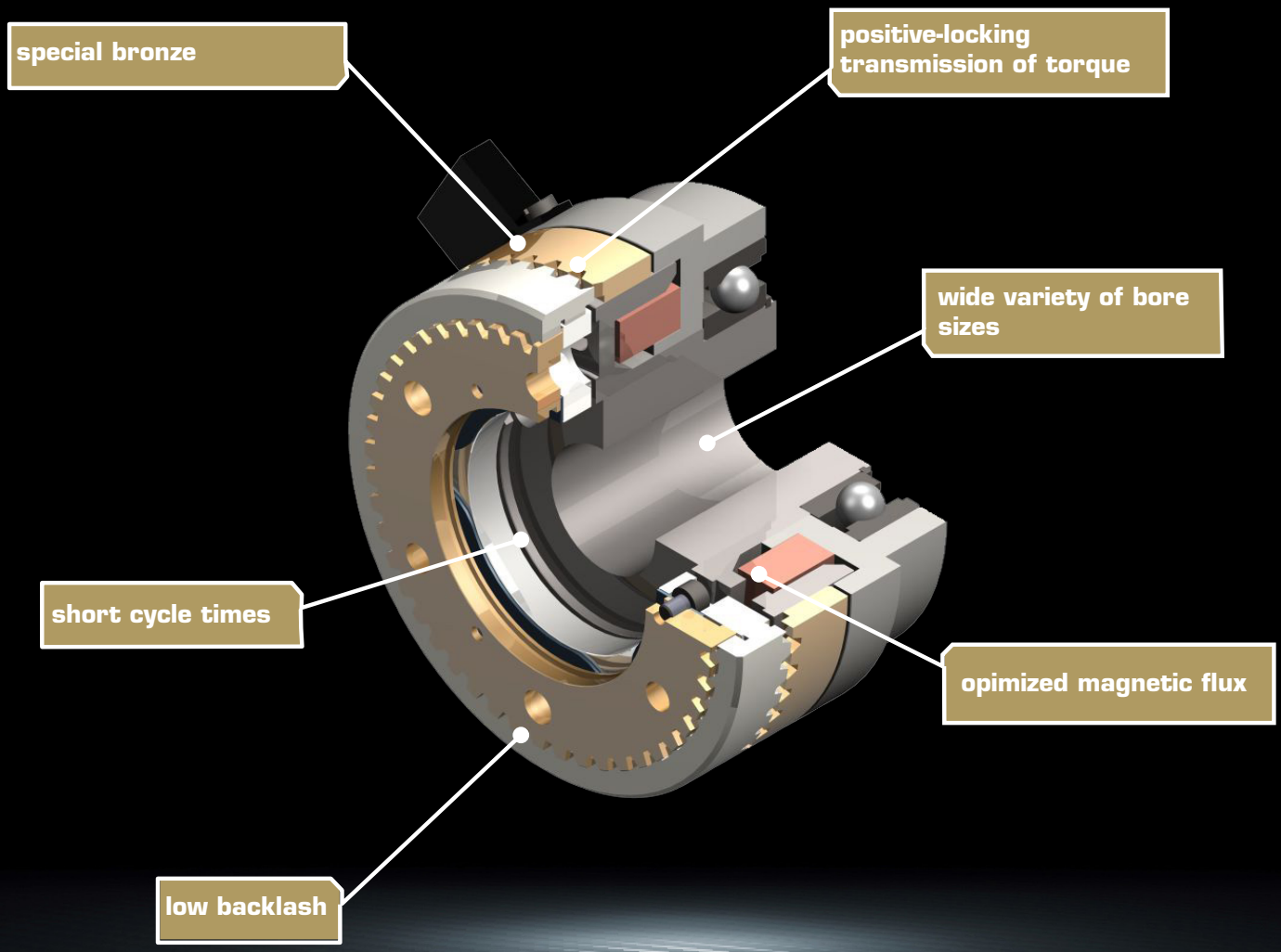

System solutions

You need more?

Mönninghoff clutches can be combined with a variety of many other power transmission elements. Such complex high-tech systems can solve any application-specific tasks and can fulfill any customer-specific wishes.

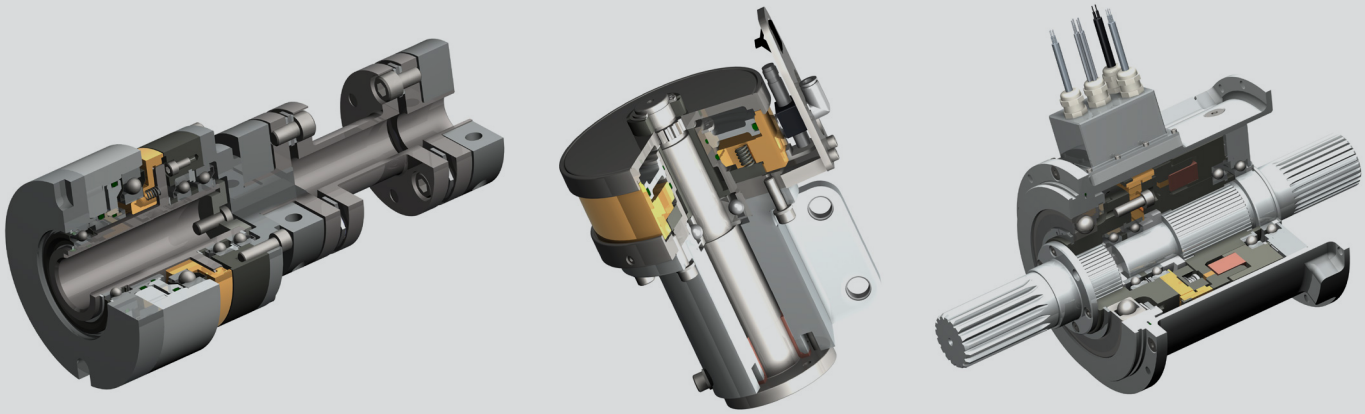

In many cases, a combination of different drive elements is needed to solve the applications particular problems and difficulties. Being not just supplier but technological partner to our customers, our extensive engineering is part of extraordinary and challenging power transmission projects.

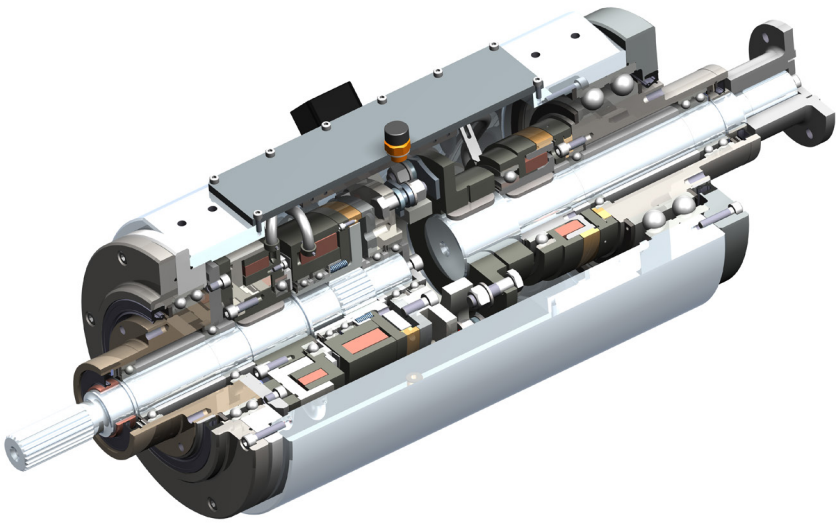

Our product is the know-how,
with hardware as an added bonus.

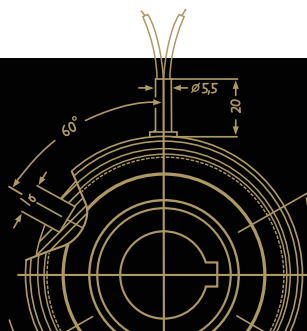

Mönninghoff

Driven by excellence

Why Mönninghoff

- intensive dialog with our customers‘ engineers
- decades of experience and competence
- deep understanding for all areas of mechanical engineering
- highly modern and flexible machine park
- enthusiasm for quality
- flexibility, inventiveness and communication skills of our employees
- commitment to Germany and Bochum as industrial location

How to reach us

Sales
sales@moenninghoff.de
+49 2327 3033-250



Helps you find a customer-specific power transmission solution for extraordinary circumstances.

Order Management
confirmation@moenninghoff.de
+49 2327 3033-353



For the competent processing and smooth handling of your orders and delivery dates.

Service
service@moenninghoff.de
+49 2327 3033-333



Feels committed to protect and preserve the high value of your machine and to secure its availability.

www.moenninghoff.de/en

