DIMENSIONS V2

MODEL VA2C Nema 56C configuration

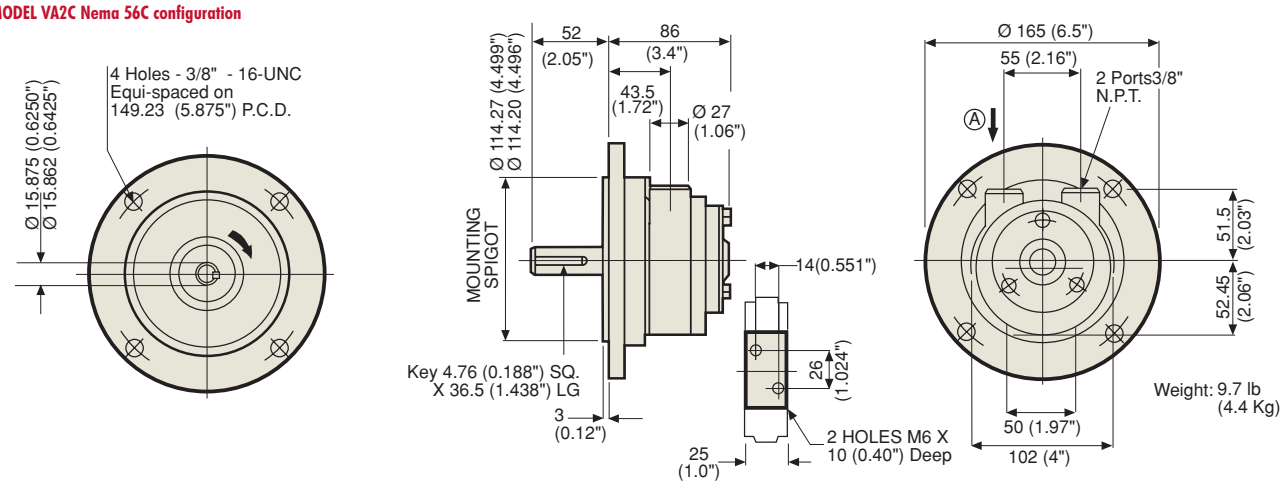

MODEL VA2J Foot Mounting configuration

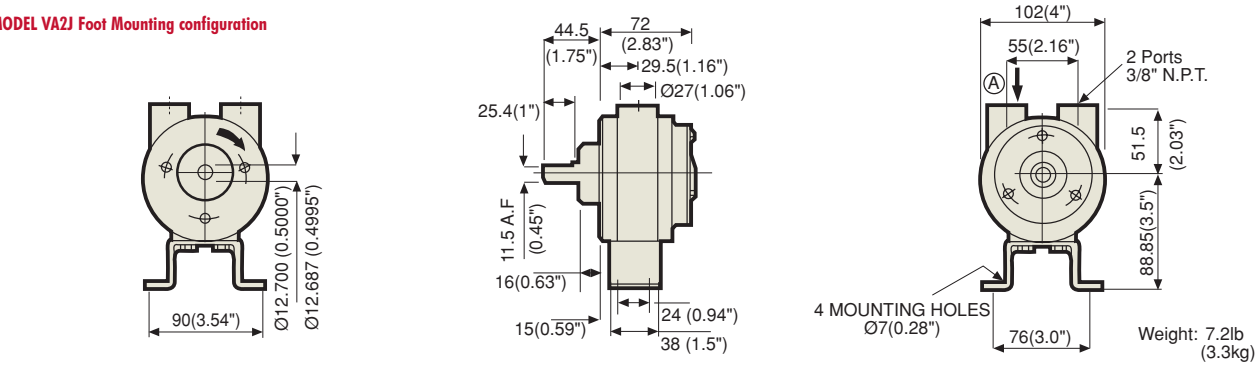

MODEL VA2X Face Mounting configuration

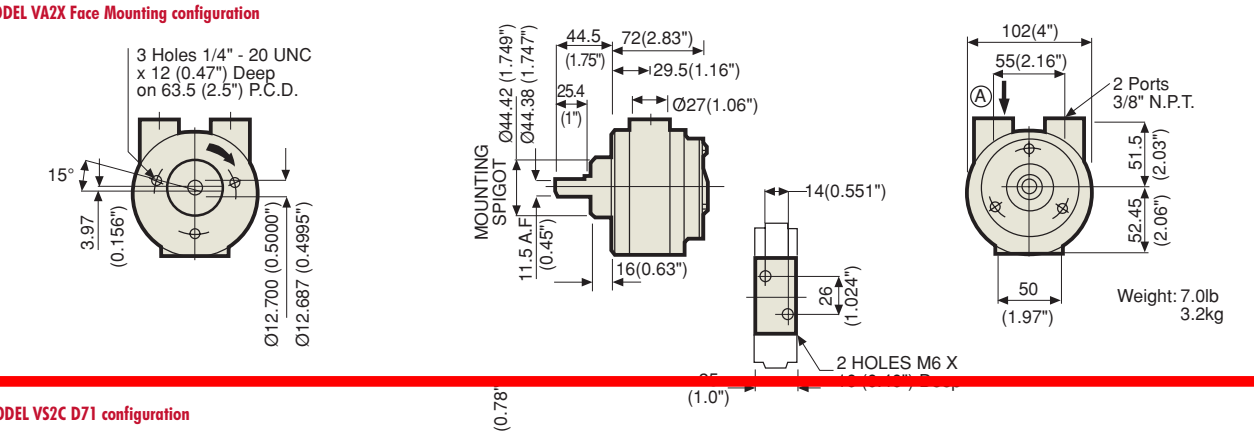

MODEL VS2C D71 configuration

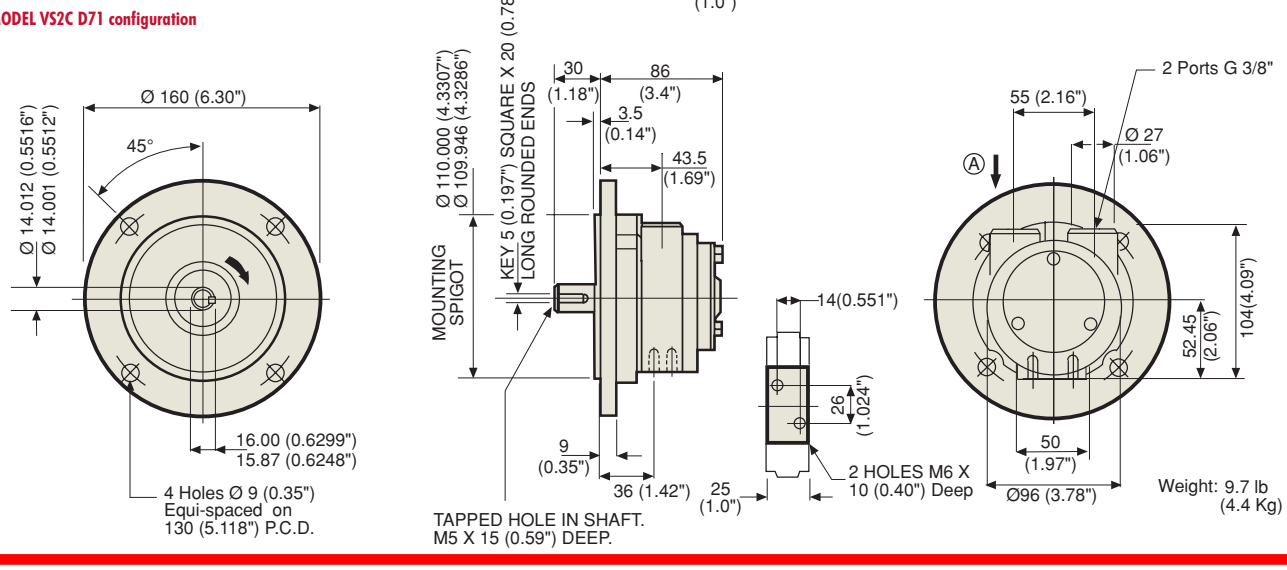

NOTE: With mains air at A shaft rotation is clockwise. Reverse port connections for opposite rotation. Muffler supplied with motor.

PERFORMANCE V2 1.1 HP/0.82kW REVERSIBLE

GRAPH 1 TORQUE - SPEED

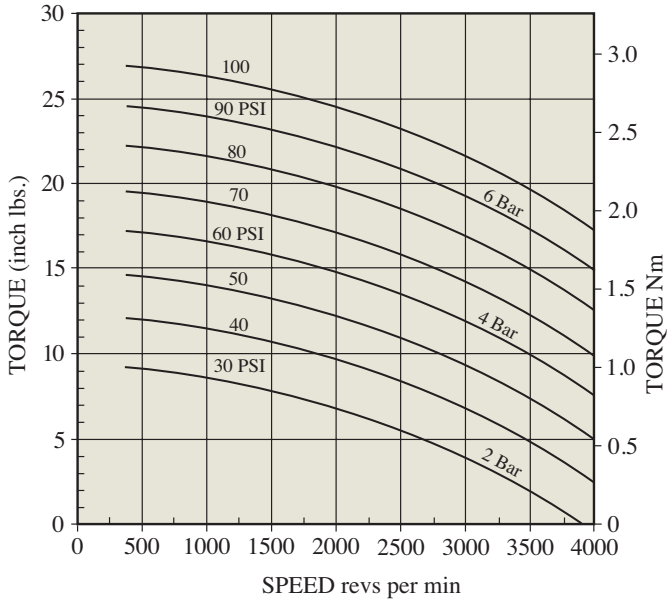

GRAPH 2 STARTING TORQUE - PRESSURE

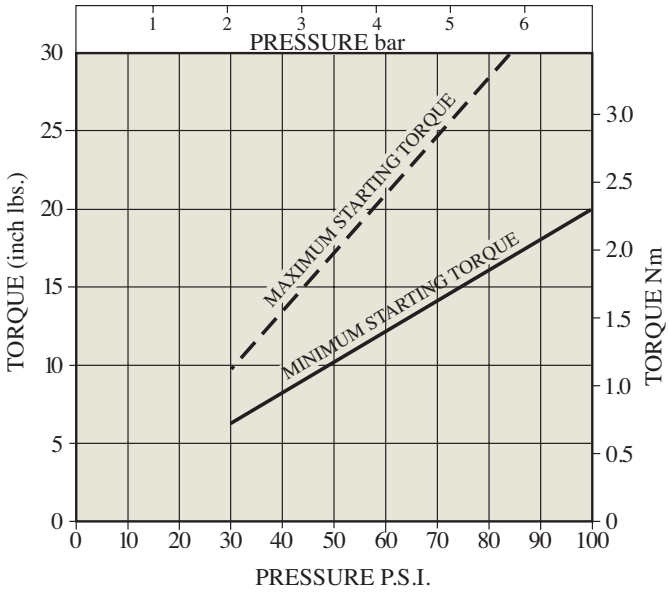

GRAPH 3 POWER - SPEED

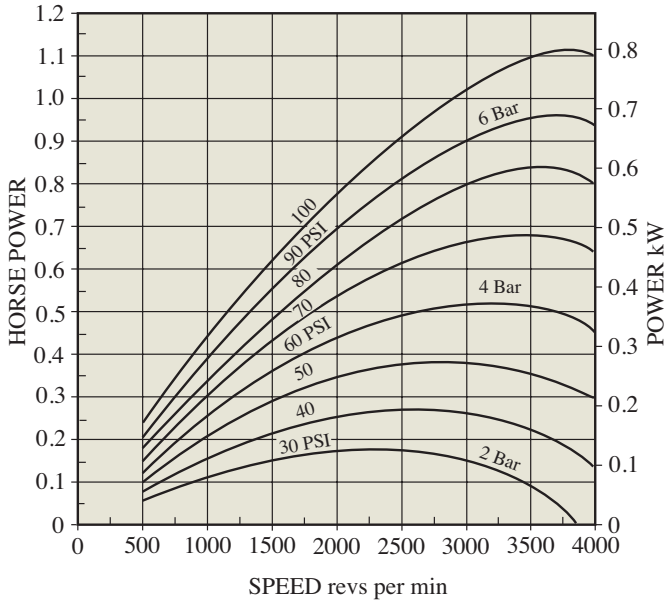

GRAPH 4 CONSUMPTION - SPEED

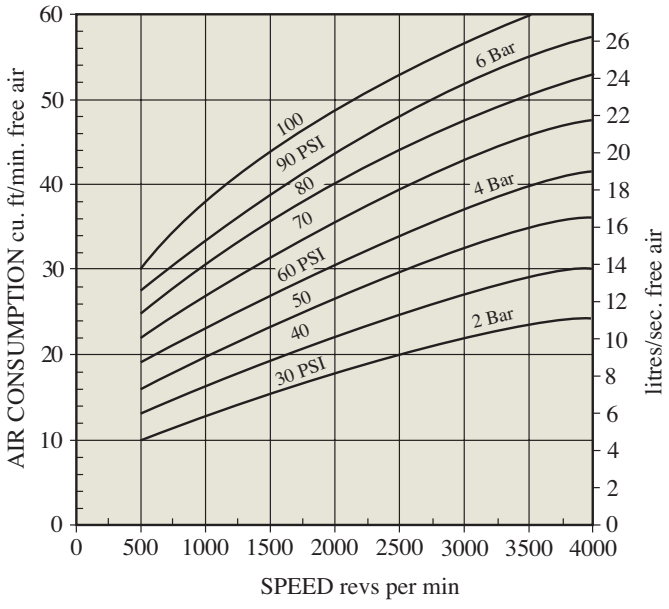

Attitude:
The motor can be operated in all positions.

Airline filtration and lubrication:
Use 64 micron filtration or better. Choose a lubricator suitable for the flow required. Prior to start up, inject oil into the inlet port.

Lubricator drop rate:
4-5 drops per minute continuous operation.
9-12 drops per minute intermittent operation.

Polar Moment of Inertia:
0.47 lb.ins2 (0.139 g.m2).

Maximum overhung force on shaft:
90 lbf (400N) In certain circumstances this may be extended. Consult your Globe Distributor. Axial loads should be kept to a minimum.

Maximum temperatures:
-4° to +176° Farenheit. (-20° to +80°C)