JOKWANG ILI

Pressure Safety & Relief Valve Specification and Calculation Sheet

Sheet No.	of	Rev . No	
Project Name			
Project No.			
Date		By	jisu.gim
Checked		Approved	

GENERAL	P&ID No.	1	-
	Tag No.	2	-
	Service Line	3	-
	Model No.	4	JSV-FF21
	Quantity	5	2
TYPE	Nozzle Type	6	Full Nozzle
	Design Type	7	Conventional
	Bonnet Type	8	Close
	Lever Type	9	None
	Cap Type	10	Screwed
CONN	Size. Inlet / Outlet	11	3/4"X1"
	Inlet. Rating / Facing	12	ASME CL.150 RF
	Outlet. Rating / Facing	13	ASME CL.150 RF
MATERIALS	Body (Base)	14	A216 WCB
	Bonnet	15	A216 WCB
	Seat	16	304 SS-st.
	Disc	17	304 SS-st.
	Guide	18	304 SS
	Gasket (Bonnet)	19	PTFE
	Spring	20	Chrome Alloy(SWOSC-B)
	Bellows	21	-
BASIS	Approved by	22	-
	Comply with NACE	23	-
	EN 10204	24	Type 3.1
	Code	25	API RP 520
	Fire	26	No
	Sizing Basis	27	NA
	Rupture Disk	28	No
SERVICE CONDITION	Fluid / State	29	Water / LIQUID
	Mol. Weight / Specific Gravity	30	1
	Compressibility Factor	31	-
	Ratio of Specific Heat	32	-
	Viscosity	33	-
	Operating / Relieving Temp.	34	/ 40 ℃
	Design Min. / Design Max. Temp.	35	- ℃
	Operating / Set Pressure	36	/ 5 barg
	Design Pressure / C.D.T.P	37	- / 5 barg
	Back Pressure: Superimposed - Constant	38	- barg
	Back Pressure: Superimposed - Variable	39	- barg
	Back Pressure: Built-up	40	- barg
	Back Pressure: Total	41	0 barg
	Allowable Overpressure	42	10 %
	Closing Pressure / Blowdown(%)	43	Min. 3.75 barg / 25%
SIZING & SELECTION	Required Capacity	44	0 m3/h
	Valve Actual Capacity	45	4.9 m3/h
	Calculated Orifice Area	46	0.0 ㎟
	Selected Orifice Area	47	103.869 ㎟
	Orifice Dia.(mm)	48	D(11.5)
			-
			-
			-
ETC	Paint System & Color	49	Heat Resistant Silver QT603
	Test Gag	50	No
	Bug screen	51	No

Calculation

Calculation of Area

A1 = 11.78*W1*√(G/(1.25P-Pb))/(Kd*Kb*Kc*Kv*Kp)

= 11.78*0*(√1/(1.25*500-0))/(0.62*1*1*1*0.6)

= **0** ㎟

Calculation of Capacity

W = A*Kd*Kb*Kc*Kv*Kp/(11.78*√(G/(1.25P-Pb)))

= 103.869*0.62*1*1*1*0.6/(11.78*√(1/(1.25*500-0)))

= 82.00 ℓ/min
= **4.9** m3/h

W	Valve Capacity	82.00 ℓ/min
W1	Required Capacity	0.00 ℓ/min
P	Set Pressure	500 KPag
A1	Calculated Area	0.0 ㎟
A	Selected Area	103.869 ㎟
Kd	Coefficient of Discharge	0.62
G	Specific Gravity	1
Pb	Back Pressure	0 KPag
Kb	Correction Factor Due to Back Pressure	1
Kc	Correction Factor for a rupture disk	1
Kv	Correction Factor due to Viscosity	1
Kp	Correction Factor due to Overpressure	0.6

Remarks

2023-05-17

TAG NO.

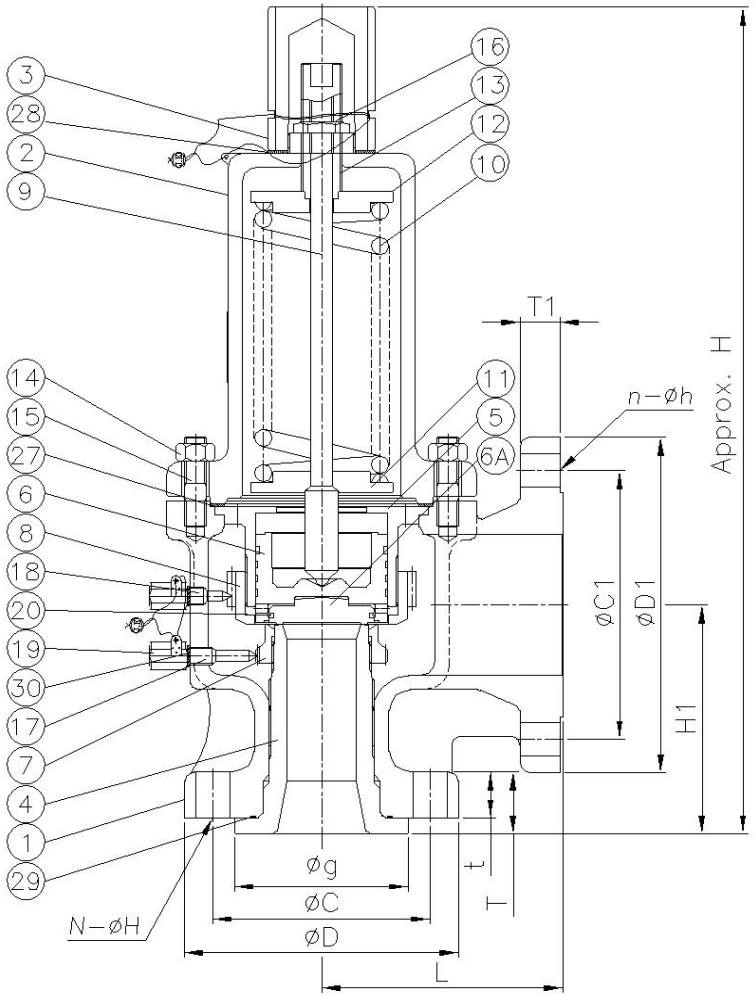

DIMENSION **UNIT : mm**

SIZE	L	H1	H	INLET FLANGE ASME B 16.5 CL150 RF							OUTLET FLANGE ASME B 16.5 CL150 RF				Wt(kg)
				ØD	Øg	ØC	ØP	T	t	N-ØH	ØD1	ØC1	T1	n-Øh	
3/4"xDx1"	96	88	287	100	42.9	69.9	-	20	15	4-16	110	79.4	12.7	4-16	7.94

NO	PART NAME	MATERIAL	Q'TY	REMARK
30	GASKET (SET SCREW)	PTFE	2	
29	GASKET (SEAT)	PTFE	1	
28	GASKET (CAP)	PTFE	1	
27	GASKET (BODY)	PTFE	1	
20	DISC RING	304 SS	1	
19	CAP NUT	316 SS	2	
18	SET SCREW (UPP.)	316 SS	1	
17	SET SCREW (LOW.)	316 SS	1	
16	LOCK NUT	304 SS	1	
15	STUD BOLT	A193 B7	4	
14	STUD NUT	A194 2H	4	
13	ADJUST SCREW	410 SS	1	
12	SPRING SEAT (UPP.)	Carbon Steel	1	
11	SPRING SEAT (LOW.)	Carbon Steel	1	
10	SPRING	Chrome Alloy(SWOSC-B)	1	
9	STEM	304 SS	1	
8	ADJUST RING (UPP.)	304 SS	1	
7	ADJUST RING (LOW.)	304 SS	1	
6A	DISC	304 SS -st.	1	
6	HOLDER	304 SS	1	
5	GUIDE	304 SS	1	
4	SEAT	304 SS -st.	1	
3	CAP	Carbon Steel	1	
2	BONNET	A216 WCB or SC 480	1	
1	BODY	A216 WCB or SC 480	1	

DWG NO	JKS-SLO190293-10	Designed	Checked	Approved
MODEL	**JSV-FF21**	J.K.YOON	H.M.MUN	S.Y.PARK
DATE	2019-08-23			

FULL BORE TYPE SAFETY RELIEF VALVE REV

JOKWANG ILI