Damcos®

Data sheet



PHP 25-05
Portable hand pump unit 5 l.

Data sheet PHP 25-05 - Portable hand pump unit 5 l.

General description:

Double-acting portable hand pump incl. 5 l. reservoir and built-in 4/3-way pilot valve for opening and closing of valves mounted with DKMS actuators.

The pump is mounted with female screw connections, which fit the male part mounted on DKMS connection and mounting blocks.

Main data:

Max. system working pressure:	135 bar - 1960 lbf/in²
Max. system test pressure:	205 bar - 2970 lbf/in²
Max. hand pump pressure:	300 bar - 4300 lbf/in²
Safety valve settings:	180 bar
Weight with 5 l. oil:	20 kg - 44 lbs
Oil displacement per double stroke:	25 cm3 - 1.525 in3
Oil viscosity range:	15 - 300 cSt
Temperature range:	-15°C to 80°C - 5°F to 176°F
Recommended oil filtration:	Should meet or be better than NAS 1630/10 or ISO Solid contaminant code 18/15
Standard hose:	4 m, other hoses on request

Operation:

In a 2-line system

Opening of valve:
- Close the stop valves on the control block mounted on the actuator.
- Connect the hoses "B" and "A" to the emergency control block (e.g. HS-block) mounted on the actuator.
- Turn the pilot valve on the hand pump to "open" position and continue to pump until the actuator or pressure gauge for nominal working pressure 105 (135) bar.
- The vlave is prevented from closing when the pilot valve is placed in centre position.

Closing of valve:
- Turn the pilot valve on the hand pump to "closed" position - otherwise as above.

In 1-line system

Opening of valve:
- Only hose "B" is used - otherwise as above.

Closing of valve:
- Turn the pilot valve on the hand pump to "closed" position.
  The actuator/valve closes without pumping.

Note: After operation disconnect the hoses from the control block on the actuator and open the stop valves again.

Hydraulic diagram:

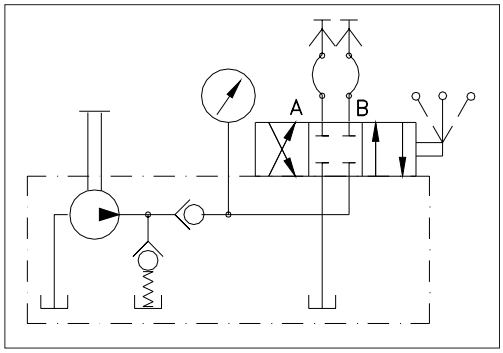

Data sheet PHP 25-05 - Portable hand pump unit 5 l.

Main dimensions:

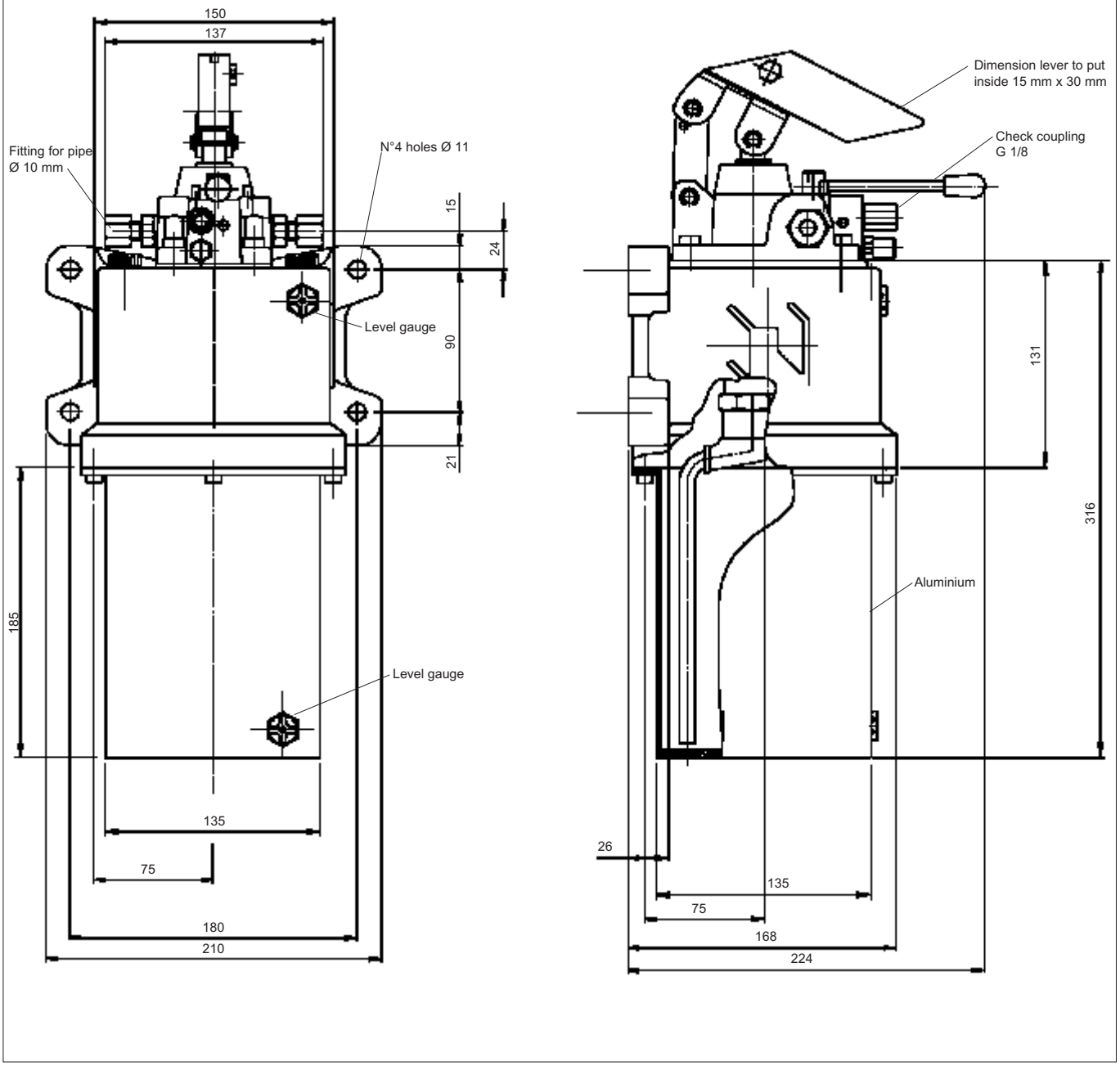

Damcos can accept no responsibility for possible errors in catalogues, brochures and other printed material. Damcos reserves the right to alter its products without notice. This also applies to products already on order provided that such alterations can be made without subsequential changes being necessary in specifications already agreed.
All trademarks in this material are property of the respective companies. Damcos and the Damcos logotype are trademarks of Damcos A/S. All rights reserved.