Product Data Sheet
September 2014
SD 6601-2E04

Damcos PHP 25-05

Portable hand pump unit 5 l

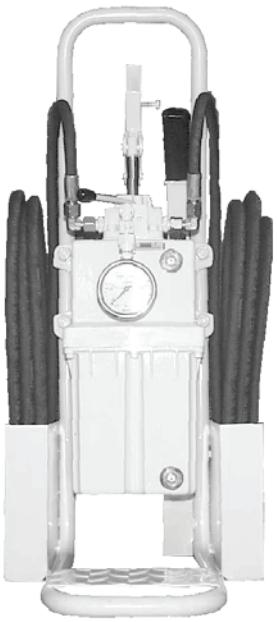

Damcos™

EMERSON™
Process Management

General description

Double-acting portable hand pump incl. 5 l. reservoir and built-in 4/3-way pilot valve for opening and closing of valves mounted with actuators or LPU.

The pump is mounted with female screw connections, which fit the male part mounted on LPU connection or mounting blocks.

This hand pump can be used in different ways:

As portable, where it can operate actuators and LPUs in different areas of the vessel.

As firmly mounted, with tank mounted on the bulkhead - specially for large actuators, for more details contact Emerson Process Management.

As filling device for LPUs and Actuators.

Operation for Actuators

In a 2-line system (double acting)

Opening of valve:

- Close the stop valves on the control block mounted on the actuator.
- Connect the hoses “B” and “A” to the emergency control block (e.g. CB-block) mounted on the actuator.
- Turn the pilot valve on the hand pump to “open” position and continue to pump until the actuator or pressure gauge for nominal working pressure 135 bar.
- The valve is prevented from closing when the pilot valve is placed in centre position.

Closing of valve:

- Turn the pilot valve on the handpump to “closed” position - otherwise as above.

In a 1-line system (single acting)

Opening of valve:

- Only hose “B” is used - otherwise as above.

Closing of valve:

- Turn the pilot valve on the hand pump to “closed” position. The actuator/valve closes without pumping.

Note!
After operation disconnect the hoses from the control block on the actuator and open the stop valves again.

Main Data

Max. system working pressure:	135 bar - 1960 lbf/in²
Max. system test pressure:	205 bar - 2970 lbf/in²
Max. hand pump pressure:	300 bar - 4300 lbf/in²
Safety valve settings:	180 bar
Weight with 5 l. oil:	20 kg - 44 lbs
Material:	aluminium, painted steel and rubber hoses
Oil displacement per double stroke:	25 cm3 - 1.525 in3
Oil viscosity range:	15 - 300 cSt
Temperature range:	-15°C to 80°C - 5°F to 176°F
Recommended oil filtration:	Should meet or be better than NAS 1638/10 or ISO Solid contaminant code 21/19/16
Standard hose:	4 m, other hoses on request

PHP Hydraulic Diagram

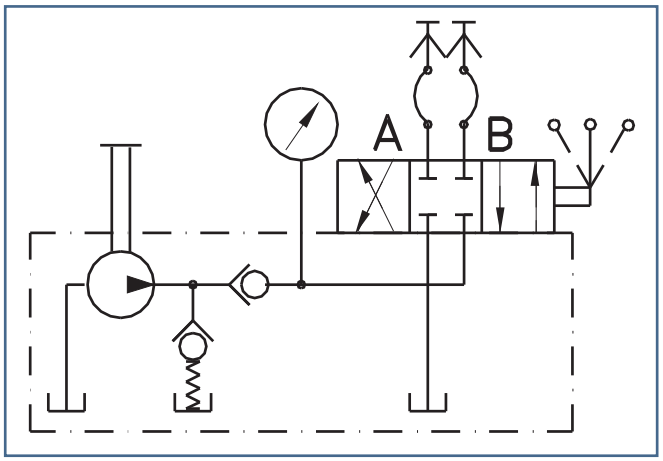

Oil Filling

Only cleaned oil must be added to the hand pump.

For more details, see our oil filling instructions.

Operation for LPU/Actuator

Manual / Emergency operation of double acting LPU/Actuator

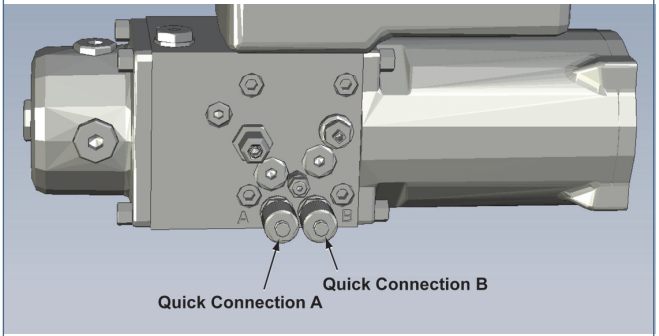

OPEN:

1. Connect hand pump B hose with B-line quick connection at the LPU.
2. Connect hand pump A hose with A-line quick connection at the LPU.
3. Turn the pilot valve on hand pump to “open” position and continue until the actuator or pressure gauge for nominal working pressure 135 bar.
4. Valve is prevented from closing when the pilot valve is placed in center position.

CLOSE:

1. Turn the pilot valve on the hand pump to “closed” position - otherwise as mentioned above.

Manual / Emergency operation of single acting LPU/ Actuator

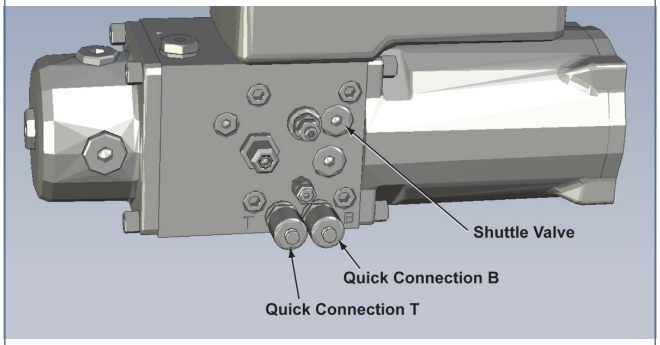

OPEN:

1. Connect hand pump B hose with B-line quick connection at the LPU.
2. Connect hand pump A hose with T-line quick connection at the LPU. With suction to T and pressure to B the shuttle valve will change over and prevents the oil from flowing to tank.
3. Turn the pilot valve on hand pump to “open” position and continue until the actuator or pressure gauge for nominal working pressure 135 bar.
4. Valve is prevented from closing when the pilot valve is placed in center position.

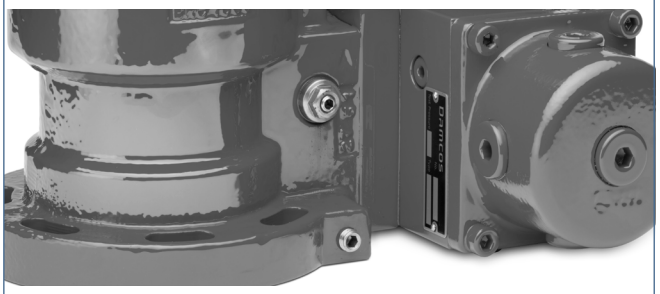

CLOSE:

1. Hose could be removed or handle placed in “remote” position.
2. To close - open the bypass valve on the actuator.
3. Close the bypass valve after operation and remove the hose if not already done.

Main Dimensions

Hand pump

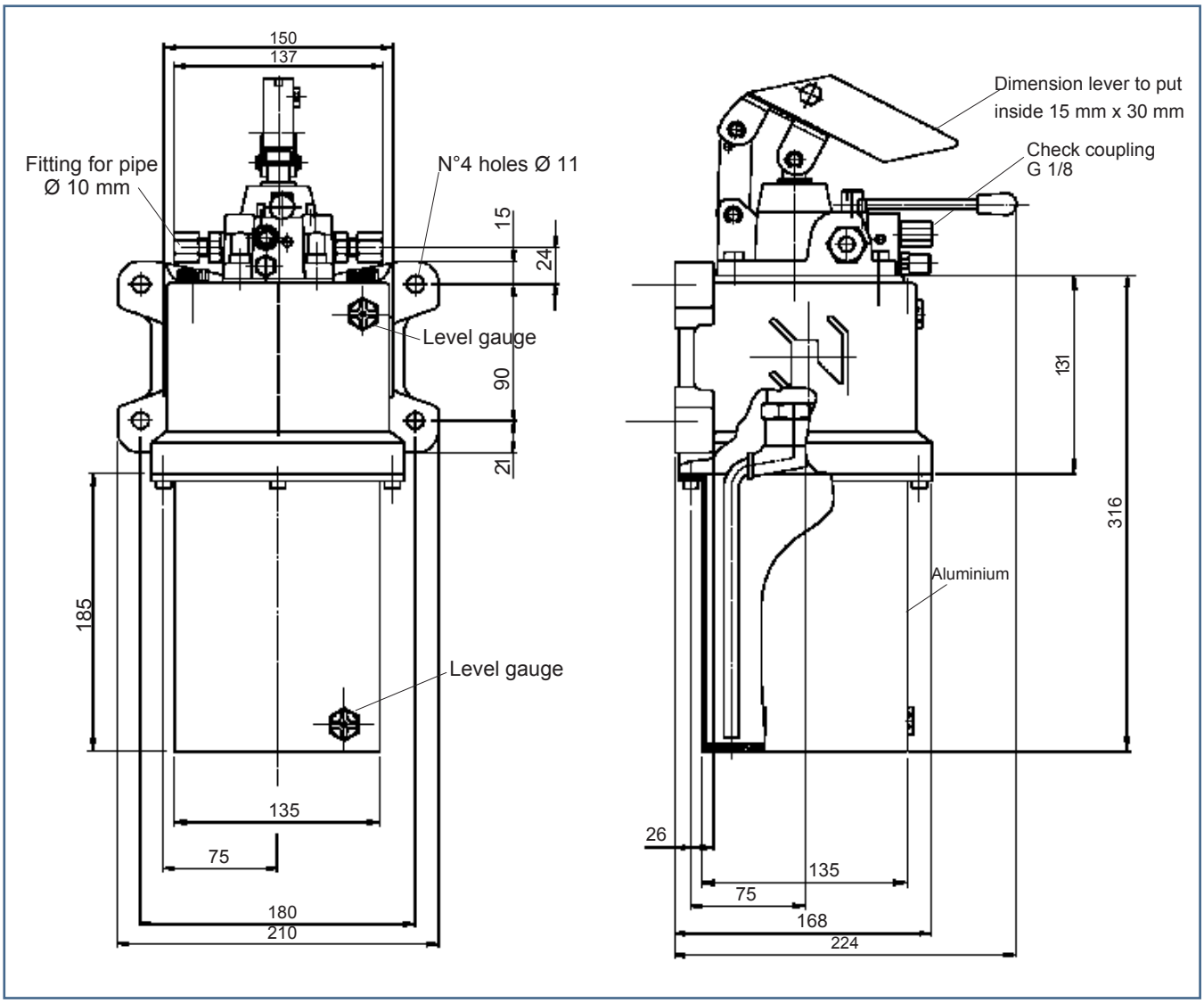

Console

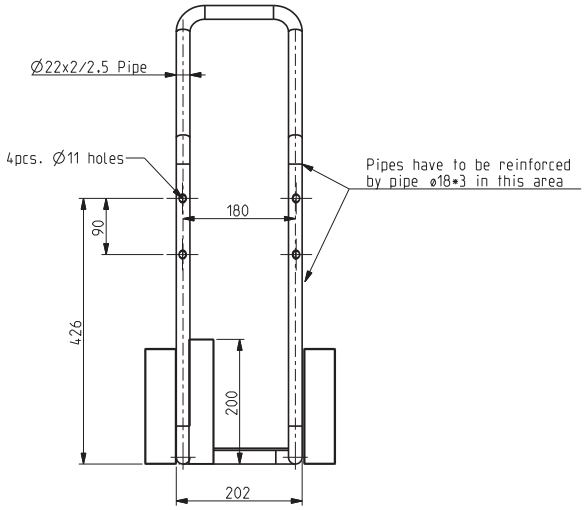
Ø22x2/2.5 Pipe
4pcs. Ø11 holes
Pipes have to be reinforced by pipe ø18*3 in this area
180
90
426
200
202

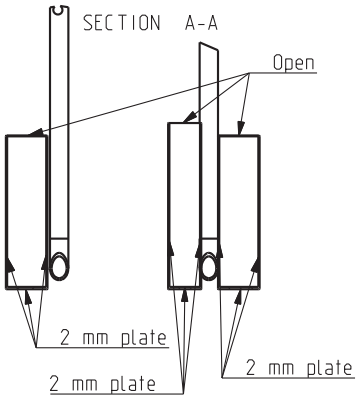
SECTION A-A
Open
2 mm plate
2 mm plate
2 mm plate

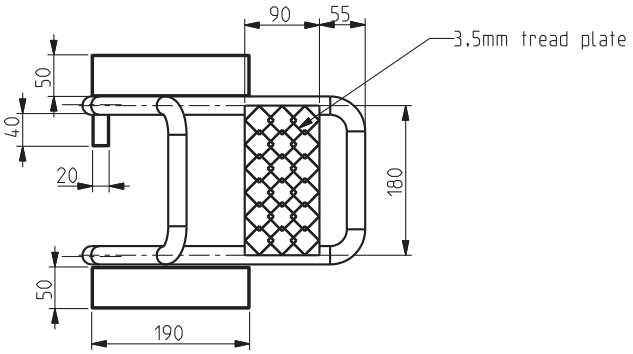
90
55
3,5mm tread plate
50
40
20
180
50
190

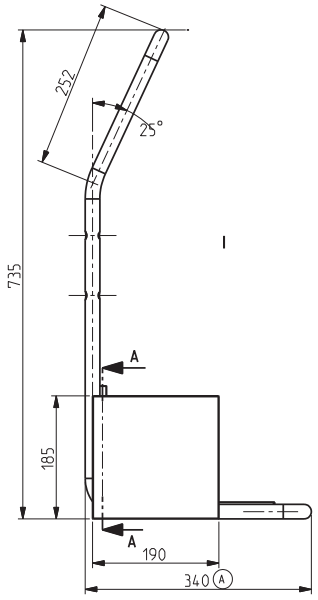
252
25°
735
A
185
A
190
340 A

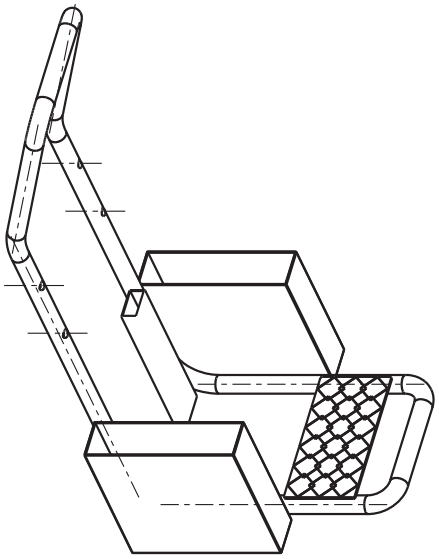

©2014 Emerson Process Management. All rights reserved.

The Emerson logo is a trademark and service mark of Emerson Electric Co. Damcos and the Damcos logotype are trademarks of Damcos A/S. All other marks are the property of their respective owners.

The contents of this publication are presented for information purposes only, and while effort has been made to ensure their accuracy, they are not to be construed as warranties or guarantees, expressed or implied, regarding the products or services described herein or their use or applicability. Standard Terms and Conditions of Sale can be issued by contacting Damcos A/S. We reserve the right to modify or improve the designs and specifications of our products at any time without notice. Damcos A/S accepts no responsibility for any errors that may appear in this publication.

Emerson Process Management
Damcos A/S
Aaderupvej 41
DK-4700 Naestved
T +45 5578 7200
F +45 5578 7272

www.EmersonProcess.com/mtm

Damcos™

EMERSON™
Process Management