ICB-62M2712M5A

SKU: 227054



Abb. ähnlich

1/2.8" Network Camera, 1920x1080, Day&Night, DOL-WDR 2,7-12mm, Infrared, IP67

Main Features

1/2.8" Sony STARVIS CMOS sensor	Smart Codec H.265 ROI (Region of interest)
Resolution max. 1920x1080 (Full HD)	Triple Streaming: H.265(+), H.264(+), MJPEG
Motorised varifocal lens 2,7~12mm	Micro SD Card, HTML5 replay, Audio, Alarm
DOL-WDR (120dB) by triple scan images at 30/25fps	Power supply PoE IEEE 802.3af
Motion Detection, Privacy Zones, Defog	Supports ONVIF Profile S and Profile T
Browser independent (IE, Edge, Safari, Firefox, Chrome)	Integrated connection box including connection board

Specifications

Series	eneo Candid Small,eneo LN-Series
Camera:	
Camera type	Bullet
Sensor size	1/2.8"
Resolution Standard	HD 1080p
Imager	CMOS, Sony STARVIS,Sensor IMX307
System	True Day&Night
Sensitivity	0,06 Lux, at F1.3,40IRE
Low Speed Shutter	yes
Low speed shutter	1x~10x
Manual electronic shutter (MES)	1/25 ~ 1/10000sec.

© Copyright eneo by VIDEOR E. Hartig GmbH, April 2023 -Technical changes reserved

ICB-62M2712M5A

Continuation of the specifications

Automatic electronic shutter (ESC)	1/25 ~ 1/10.000sec.
Wide Dynamic Range (WDR)	DOL-WDR 120dB,D-WDR
Flickerless function	yes
Backlight Compensation	BLC,HLC
Day&Night switch	ICR
Day&Night mode	Automatic,Day,Night,night-color mode,extern (Sensor)
White balance	ATW-Indoor,ATW-Outdoor,Manual,Fluorescent light,Light bulb,Shade,Clear Sky,Flammes
Signal-to-noise ratio	50dB
Video:	
Resolution	1920x1080 (16:9),1600x900 (16:9),1280x720 (16:9),960x540 (16:9),640x360 (16:9),320x180 (16:9)
Image resolution max.	1920x1080
Image display	VerticalView 90°/270°,4:3,16:9
Stream types	Multi Streaming
Image Transmission Rate	30 fps
Video compression	H.264,H.264+ (Smart Stream),H.265,H.265+ (Smart Stream),M-JPEG
Lens:	
Lens Type	Varifocal (motorized)
Zoom Factor	4x
Focal Length	2,7 - 12 mm
Digital Zoom	yes
MOD (Mininum Object Distance)	0,5 m
Iris Control	DC
Vertical Angle of View	54 - 18°
Horizontal Angle of View	103 - 33°
DORI:	
Detect (25px/m)	42,6 - 137,2 m
Observe (62 px/m)	17,1 - 55,3 m
Recognize (125 px/m)	8,5 - 27,6 m
Identify (250 px/m)	4,2 - 13,8 m
Functions:	
Multicast compliant	yes
Motion Detector	yes
Analysis functions	Motion detection,Defog
Alarm processing	recording internal storage,E-Mail,HTTP,FTP,Boost,TCP,UDP,Onvif Event Mapping,alarm out
Audio support	yes
Audio	2 Way Audio
Password protection	administrator & users

© Copyright eneo by VIDEOR E. Hartig GmbH, April 2023 -Technical changes reserved

ICB-62M2712M5A

Continuation of the specifications

e-PTZ support	yes
Internal storage	microSDHC card,microSDXC card
Menu languages	English,German,French,Korean
Privacy zone masking	Areas-ON/OFF switchable
Remote configuration	Browser
Web browser	MS internet Explorer: ActiveX ex 9.0,Safari: MJPEG,Mozilla: MJPEG,Google Chrome: MJPEG,Edge: MJPEG
User interface	Type A (orange / grey)
Mirror function	mirror,flip
Digital Noise Reduction	yes
Network:	
Network protocols	TCP/IP,UDP,IPv4,IPv6,HTTP,HTTPS,FTP,UPnP,RTP,RTSP,RTCP,DHCP,ARP,Zeroconf,Bonjour
Interfaces / Inputs/ Outputs:	
Video outputs	no
External connectors	micro SD card slot,Connection board (LSA, RJ45, audio, I / O alarm & Sabotage contacts)
Ethernet interface	10Base-T,100Base-TX
Alarm inputs	1
Alarm outputs	1
Serial interfaces	Ethernet
General:	
Dimensions (HxWxD)	130,50x82,15x265,80mm
Weight	1.25kg
Ilumination	infrared
Illumination	4x High Power LED 850nm
Illumination range	approx. 40m
Color (housing)	Pantone Cool Gray 1C
Housing	Outdoor
Hosuing material	Aluminium
Integrated wall mount	yes
Power consumption	PoE,8W
Blower	yes
Mounting	Wall mount,Ceiling mount
ONVIF	ONVIF Profile S,ONVIF Profile T
Power over Ethernet	IEEE 802.3af
Protection rating	IP67
SDK	upon request
Sunshield	yes
Supply voltage	PoE
Operating temperature	-50°C ~ +50°C
Text display	supplied

© Copyright eneo by VIDEOR E. Hartig GmbH, April 2023 -Technical changes reserved

ICB-62M2712M5A

Continuation of the specifications

Vandal proof	no
Parts supplied:	
Parts supplied	manual,bag of screws
Notes:	
Special features	Integrated connection box with sabotage alarm contact,Simple wiring, the integrated connection board offers the possibility of network cabling via LSA connection bar or RJ45 socket.Terminal block for connection of alarm contacts, external voltage supply and audio.

Technical Drawing

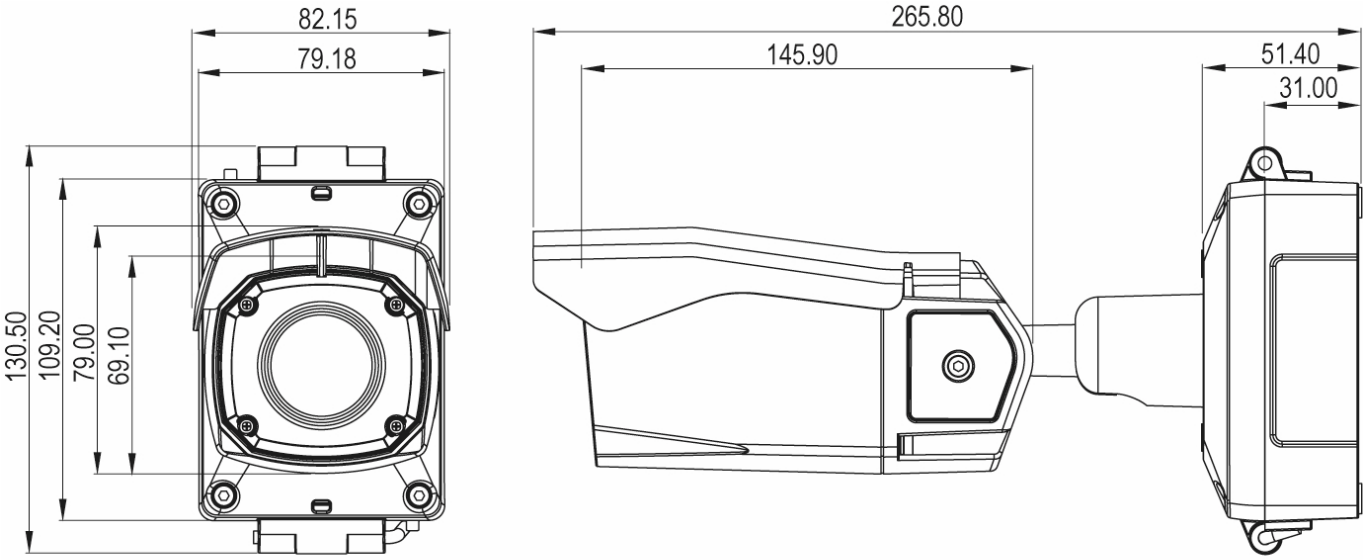

Dimensions / Maße: mm

© Copyright eneo by VIDEOR E. Hartig GmbH, April 2023 -Technical changes reserved