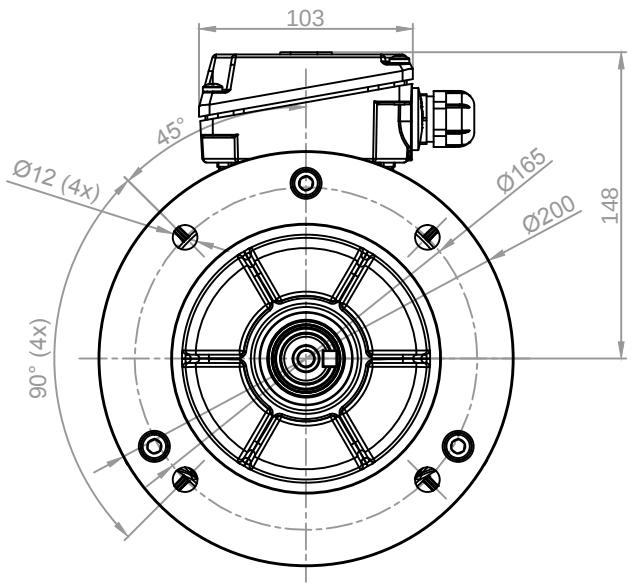

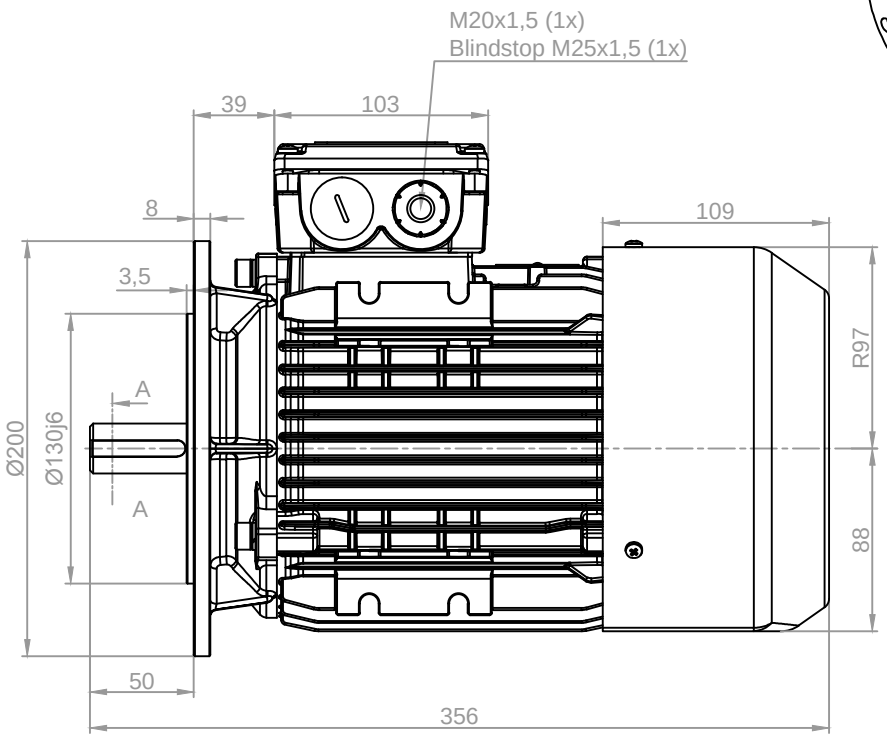

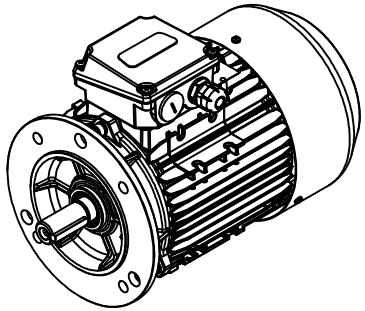

SECTION A-A

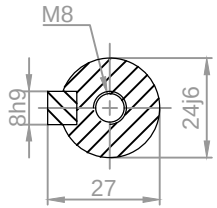

All dimensions are in mm and according to IEC 60072

Motor: CANTONI MOTOR	Feet:	None	Customer:			Projection:
	Flange:	B5	Quotation number:			
Mounting possibilities:	Dimensions are valid for motor type:		Article number:		Drawn by:	JL
IM B5 V1 V3	3SIEK 90L4		Special remarks:		Approved by:	OB
IM 3001 3011 3031	3SIEK 90L6				Date:	16-09-2016
					Drawing number:	T1309.000093.R0

US

REV. 0

Sheet 1/1