DO NOT SCALE	IF IN DOUBT PLEASE ASK	ENGINEERING STANDARDS ARE REFERENCED AS 5-3-05-05- SERIES,IF IN DOUBT, PLEASE REQUEST LATEST ISSUE.	PROJECT No:-	TEST SPEC No:-		ALPHA ISSUES RECORD PRE-PRODUCTION CHANGES
			PERFORMANCE GRAPH No:- G11394			

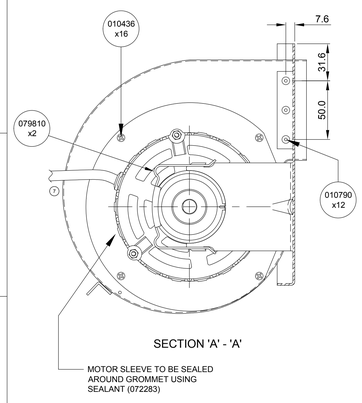

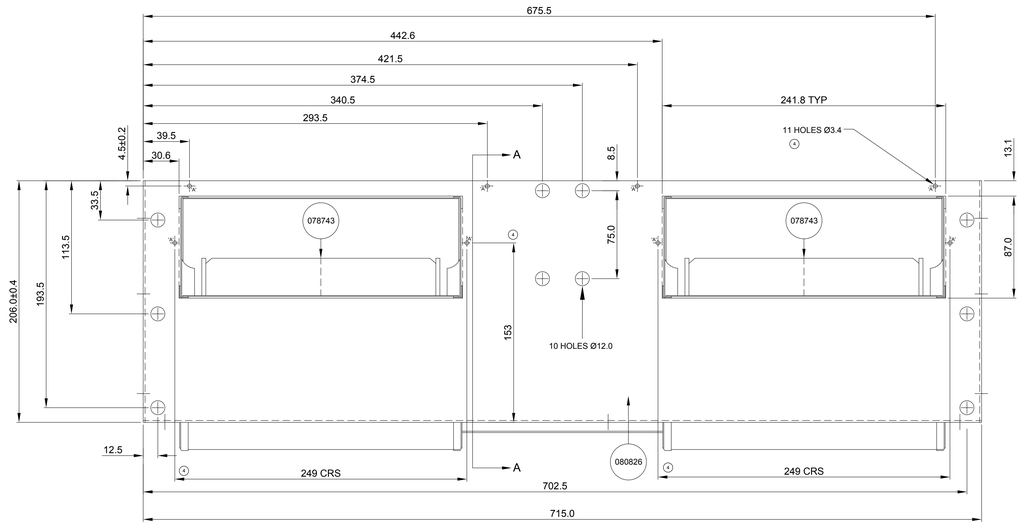

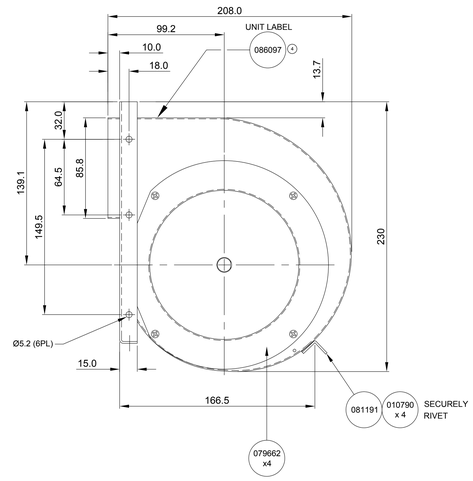

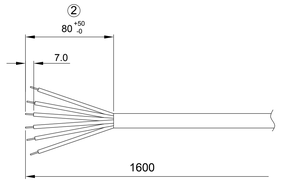

MOTOR CONNECTION LEADS IN 0.5² mm RADOX TERMINATING IN CRIMP BOOTLACE TERMINALS

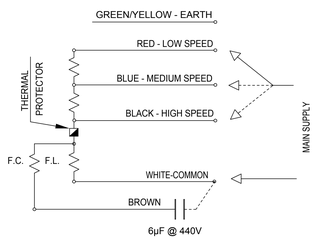

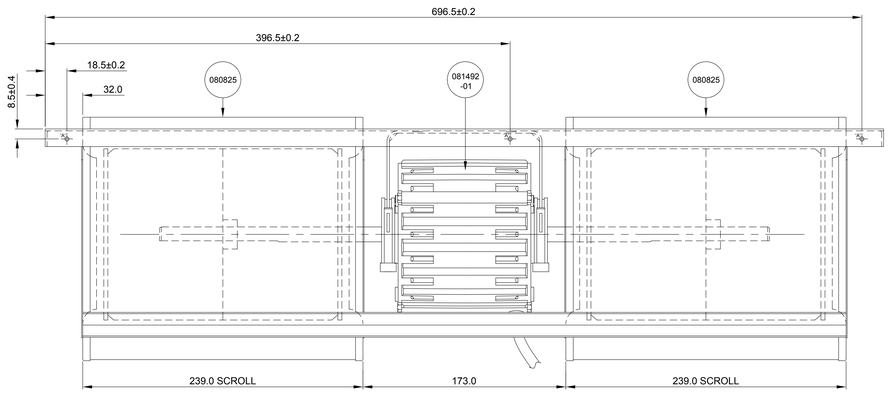

LABEL DETAIL ⊙

⊙ NOTES:-

CAPACITOR FFE1049-31A TO BE SUPPLIED LOOSE, CAPACITOR CAP 080969-03 TO BE SUPPLIED LOOSE.

ALL UNTOLERANCED DIMENSIONS ARE FOR REFERENCE PURPOSES ONLY.

THIS PRODUCT MUST BE EARTHED.

WARNING - ROTATING PARTS. HANDLING, INSTALLATION AND GUARDING PRECAUTIONS MUST BE TAKEN.

INSTALLATION AND OPERATION BY QUALIFIED PERSONNEL ONLY.

THIS PRODUCT IS INTENDED FOR USE WITHIN THIRD PARTY OEM EQUIPMENT. CORRECT GUARDING AND INTERLOCKING ARE THE RESPONSIBILITY OF THE THIRD PARTY OEM EQUIPMENT MANUFACTURER. THIS EQUIPMENT SHOULD NOT BE OPERATED WITHOUT APPROPRIATE GUARDS AND INTERLOCKS IN PLACE. INSTRUCTIONS AND MARKING FOR SAFE USE IN APPLICATION ARE THE RESPONSIBILITY OF THE THIRD PARTY OEM EQUIPMENT MANUFACTURER.

CARE SHOULD BE TAKEN DURING HANDLING - SHARP/POINTED EDGES MAY EXIST ON THE PRODUCT.

CORRECT CONNECTION TO THE SUPPLY MAINS IS THE RESPONSIBILITY OF THE THIRD PARTY OEM EQUIPMENT MANUFACTURER. SUITABLE SUPPLY PROTECTION AND ISOLATION MUST BE PROVIDED. EXTERNAL CABLING SHOULD NOT RUN OVER SHARP EDGES.

DAMAGE TO MAINS SUPPLY CABLES SHOULD BE REPAIRED BY QUALIFIED PERSONNEL ONLY.

CABLES SHOULD BE KEPT CLEAR OF HOT SURFACES.

MOTOR RATING IP10

ISS.	MODIFICATION	DATE	C/N NO.
7	PICTORIAL CHANGE TO LEAD POSITION ON SIDE ELEVATION	20/01/15	19423
6	DRAWING UPDATED INTO NEW BOARDER.	21/01/14	19233A
5	MOTOR LEAD EXIT ROTATED X 20° C.W	11/02/13	18924
4	4 'A' TYPE HOLES ADDED IN BASE OF DECK. LABEL UPDATED & CODED. NOTES MODIFIED.	11/08/11	18479
3	MOTOR S/ASY 084251 REMOVED REPLACED BY MOTOR 081492-01	14/05/04	16422
2	NOTES ADDED. LEAD TOL ADDED	17/03/03	16175
1	ISSUED	17/03/03	NPM03/08

MATERIAL

GALVANISED STEEL DECK & HOUSINGS ALUMINIUM IMPELLERS

FINISH

NATURAL

FIRST USED ON

SIMILAR TO
076658

DIRECTORY PATH
\\ASY\FANDECK\DPN\

TITLE

FINAL ASSEMBLY OF FANDECK DPN146-203

DRAWING NO.

076658-01

torin-sifan
The Partner of Choice

Torin Limited
Drakes Way
Swindon Wiltshire
SN3 3JB
Tel : (01793) 524291

THIS DRAWING AND SPECIFICATIONS IS THE EXCLUSIVE PROPERTY OF TORIN LIMITED, ISSUED IN STRICT CONFIDENCE AND SHALL NOT BE REPRODUCED, COPIED OR USED FOR ANY REASON OTHER THAN WHICH IT IS ISSUED, WITHOUT THE WRITTEN PERMISSION OF TORIN LIMITED.

© TORIN LIMITED

PRODUCT TYPE: FANDECK

TECH 1: AC ■ EC ☐

TECH 2: AC ■ BD ☐ CP ☐ DC ☐ ECI ☐ ECR ☐

ERP DIRECTIVE: N | Ng/EN ARTICLE: A21

PROJECTION

DRAWING GENERALLY CONFORMS TO BS 8888

ALL BS TO LATEST ISSUE

DR. DA	CHKD	AP.	A2
DATE 17/03/03	DATE	DATE	

DIMENSIONS IN MILLIMETRES

SCALE: N.T.S. (UNLESS OTHERWISE STATED)

076658-01
DRAWING NO.

EP24/5-A2