VECTOR

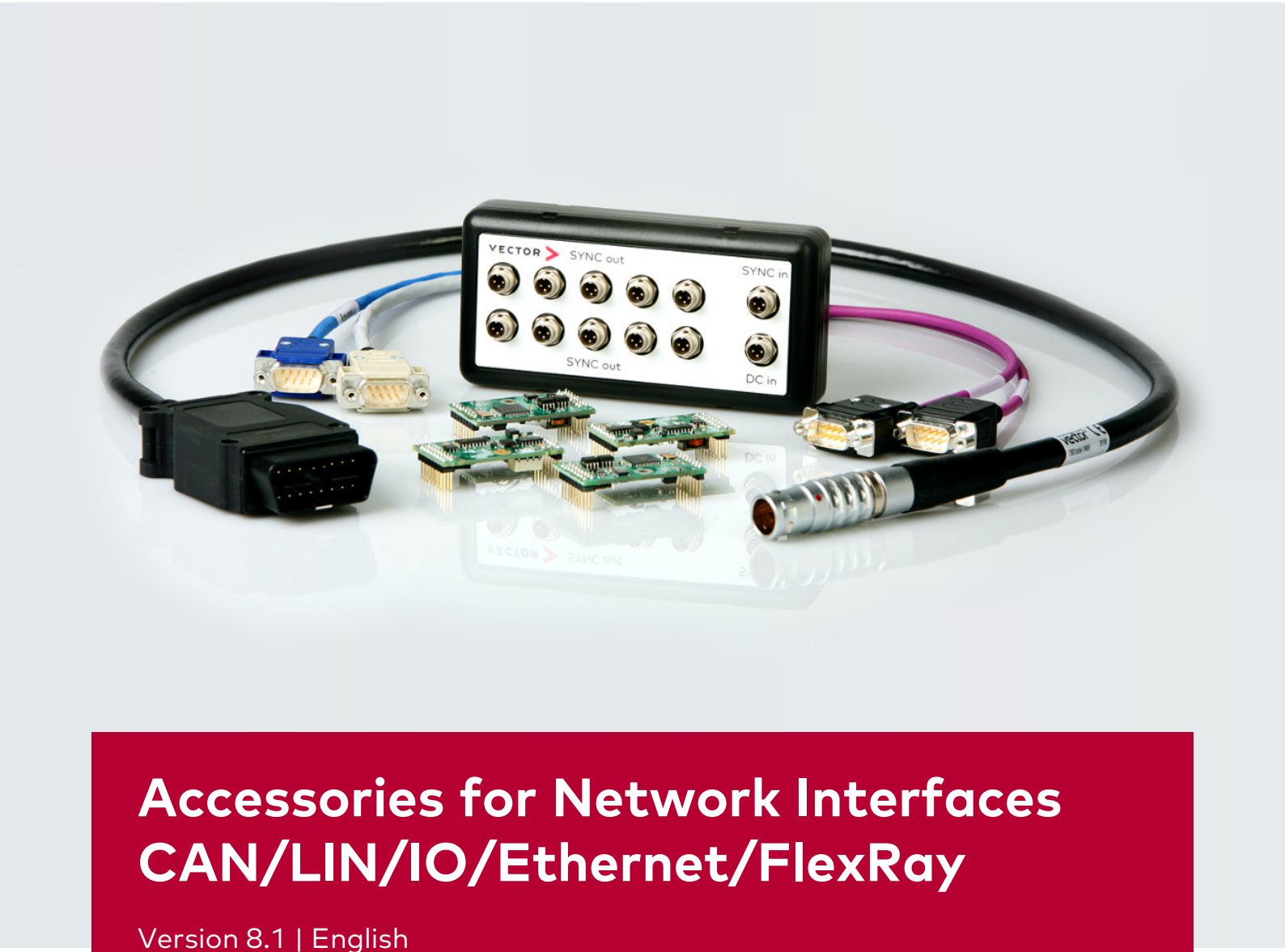

Accessories for Network Interfaces CAN/LIN/IO/Ethernet/FlexRay

Version 8.1 | English

Imprint

Vector Informatik GmbH
Ingersheimer Straße 24
D-70499 Stuttgart

The information and data given in this user manual can be changed without prior notice. No part of this manual may be reproduced in any form or by any means without the written permission of the publisher, regardless of which method or which instruments, electronic or mechanical, are used. All technical information, drafts, etc. are liable to law of copyright protection.

© Copyright 2022, Vector Informatik GmbH. All rights reserved.

Contents

1 Introduction 10
1.1 About this User Manual 11
1.1.1 Warranty 12
1.1.2 Registered Trademarks 12
1.2 Important Notes 13
1.2.1 Safety Instructions and Hazard Warnings 13
1.2.2 Disclaimer 13
1.2.3 Disposal of Vector Hardware 14

2 Accessories Finder 15
2.1 XL Interface Family 17
2.1.1 Accessories for CANboardXL (PCI, PCIe, PXI) 17
2.1.2 Accessories for CANcardXL 17
2.1.3 Accessories for CANcardXLe 18
2.1.4 Accessories for CANcaseXL 18
2.1.5 Accessories for CANcaseXL log 19
2.2 Accessories for VN0601 20
2.3 VN1500 Interface Family 21
2.3.1 Accessories for VN1530 21
2.3.2 Accessories for VN1531 21
2.4 VN1600 Interface Family 22
2.4.1 Accessories for VN1610 22
2.4.2 Accessories for VN1611 22
2.4.3 Accessories for VN1630A 22
2.4.4 Accessories for VN1640A 23
2.4.5 Accessories for VN1630 log 23
2.4.6 Accessories for VN1670 24
2.5 VN2600 Interface Family 25
2.5.1 Accessories for VN2610 25
2.5.2 Accessories for VN2640 25
2.6 VN3000 Interface Family 26
2.6.1 Accessories for VN3300 26
2.6.2 Accessories for VN3600 26
2.7 Accessories for VN4610 27
2.8 VN5000 Interface Family 28
2.8.1 Accessories for VN5240 28
2.8.2 Accessories for VN5430 28
2.8.3 Accessories for VN5610A 29
2.8.4 Accessories for VN5620 30

2.8.5 Accessories for VN5640 Option 1000BASE-T1 31
2.8.6 Accessories for VN5640 32
2.8.7 Accessories for VN5650 32
2.9 VN7500 Interface Family 34
2.9.1 Accessories for VN7570 34
2.9.2 Accessories for VN7572 35
2.10 VN7600 Interface Family 36
2.10.1 Accessories for VN7600 36
2.10.2 Accessories for VN7610 37
2.10.3 Accessories for VN7640 37
2.11 Accessories for VN8810 38
2.12 VN8900 Interface Family 39
2.12.1 Accessories for VN8910A 39
2.12.2 Accessories for VN8911 39
2.12.3 Accessories for VN8912A 40
2.12.4 Accessories for VN8914 40
2.12.5 Accessories for VN8950 41
2.12.6 Accessories for VN8970 41
2.12.7 Accessories for VN8972 42

3 Transceiver - Products 43

3.1 Piggybacks 44
3.1.1 CAN High-Speed 45
3.1.2 CAN Low-Speed (fault tolerant) 45
3.1.3 LIN 46
3.1.4 Single Wire CAN 46
3.1.5 Truck & Trailer CAN 46
3.1.6 Digital/Analog IO 46
3.1.7 J1708 46
3.1.8 FlexRay 47
3.1.9 Sensors 47
3.1.10 Electrical Isolation 48
3.1.10.1 CANpiggy 48
3.1.10.2 LINpiggy 49
3.2 Cabs 50
3.2.1 CAN High-Speed 50
3.2.2 CAN Low-Speed (fault tolerant) 51
3.2.3 LIN 51
3.2.4 Single Wire CAN 51
3.2.5 Truck & Trailer CAN 51
3.2.6 Digital/Analog IO 51

3.2.7 J1708 52
3.3 TWINcabs 53
3.3.1 CAN High-/Low-Speed (fault tolerant) 53
3.3.2 LIN 53
3.4 Other Designs 54
3.5 Compatibility with VN Interface Family 55
3.6 Compatibility with XL Interface Family 57

4 Transceiver - Technical Data 59

4.1 D-SUB Pin Assignment 61
4.2 CAN High-Speed 63
4.2.1 General Information 63
4.2.2 251 63
4.2.3 251opto 64
4.2.4 251mag 64
4.2.5 251fibre 65
4.2.6 1040mag 66
4.2.7 1041Aopto 67
4.2.8 1041Amag 69
4.2.9 1050 69
4.2.10 1050opto 69
4.2.11 1050mag 70
4.2.12 1051cap 70
4.2.13 1057Gcap 70
4.2.14 1462BT 71
4.3 CAN Low-Speed (fault tolerant) 72
4.3.1 General Information 72
4.3.2 1054 73
4.3.3 1054opto 74
4.3.4 1054mag 75
4.3.5 1055cap 76
4.4 LIN 77
4.4.1 General Information 77
4.4.2 7259 78
4.4.3 7269mag 79
4.5 Single Wire CAN 80
4.5.1 General Information 80
4.5.2 5790c 80
4.5.3 5790opto c 83
4.5.4 7356cap 83

4.6 J1708 84
4.6.1 General Information 84
4.6.2 65176opto 84
4.7 Truck & Trailer CAN 85
4.7.1 General Information 85
4.7.2 10011opto 86
4.8 Special Design 87
4.8.1 CANcab EVA 87
4.9 FlexRay 88
4.9.1 General Information 88
4.9.2 1080Amag 88
4.9.3 1082cap 89
4.10 Sensors 90
4.10.1 SENT (Single Edge Nibble Transmission) 90

5 IOcab 8444opto 92
5.1 Introduction 93
5.2 Digital Inputs and Outputs 95
5.2.1 Important Notes on Real Time Capability of Digital Outputs 96
5.3 Analog Inputs and Outputs 98
5.4 Digital PWM Output / Capture Inputs 100
5.5 Data Logging 102
5.6 Firmware Update 103
5.7 Technical Data 105

6 IOpiggy 8642 108
6.1 General Information 109
6.2 Digital Inputs and Outputs 110
6.3 Analog Inputs and Outputs 113
6.4 PWM Outputs (PWM0/PWM1) 114
6.5 PWM Input (PWM0) 114
6.6 Analog Comparator 114
6.7 D-SUB15 Pin Assignment 115
6.8 Technical Data 116

7 Cables and Connectors 118
7.1 CAN/LIN 120
7.1.1 CANcable0 120

7.1.2 CANcable1 120
7.1.3 CANcableA 121
7.1.4 CANcableTnT, CANcable Bunch Plug 121
7.1.5 CANcableTnT Term 122
7.1.6 CANcableY 122
7.1.7 CANcable 2Y 123
7.1.8 CANterm 120 124
7.1.9 CANcable Set Pro 124
7.2 Ethernet 125
7.2.1 AEcable 2Y Family 125
7.2.1.1 General Information 125
7.2.1.2 Connector Options 126
7.2.2 AEcable ix/DSUB9 129
7.2.2.1 General Information 129
7.2.3 BRcable 2Y 130
7.2.4 VNcable D-SUB9 HSD Z Male 131
7.2.5 VNcable D-SUB9 HSD Z Female 132
7.2.6 Ethernet Cables 133
7.2.6.1 Ethernet Cable 0.25m 133
7.2.6.2 Ethernet Cable 10Gbps 0.5m 133
7.2.6.3 Ethernet Cable 10Gbps 2m 133
7.2.6.4 Ethernet Cable 10Gbps 7.5m 133
7.2.6.5 Ethernet Cable Robust 10Gbps 0.5m 134
7.2.6.6 Ethernet Cable Robust 10Gbps 2.0m 134
7.2.6.7 Ethernet Cable Robust 10Gbps 7.5m 134
7.3 MOST 135
7.3.1 ECL Cable 135
7.3.2 Fiber Optic Cable 135
7.3.3 Fiber Optic Cable Coupling 136
7.4 FlexRay 137
7.4.1 FRcable Set 137
7.4.2 FRcable A 137
7.4.3 FRcable AB 138
7.4.4 FRterm 138
7.4.5 FR/CANcable 2Y 139
7.5 OBDcables 140
7.5.1 OBDcable CAN 140
7.5.2 OBDcable OEM GM 141
7.5.3 OBDcable OEM01 142
7.5.4 OBDcable VN88 143
7.5.5 OBDcable VN88A 144
7.5.6 OBDcable DoIP/CAN B1 145
7.6 Miscellaneous 146

7.6.1 Cable Binder 3pol Connector with Pigtail 146
7.6.2 Power Sync Cable 2xBinder <> Banana Plugs 147
7.6.3 Breakout Box D62Y9 148
7.6.4 VNcable DSUB62 150
7.6.5 VNcable DSUB62 A 151
7.6.6 VNcable DSUB62 B 152
7.6.7 VNcable D62Y9 153
7.6.8 VNcable DSUB37 154
7.6.9 VNcable 3Y 155
7.6.10 Terminal Block DSUB37 156
7.6.11 Breakout Box VN88 157
7.6.12 VX1362B CAN Cable LEMO/Banana Plugs 1.5M 158
7.6.13 Fibre Wire 10 m for CANcab 251fiber 159
7.6.14 Fibre Wire 25 m for CANcab 251fiber 159
7.6.15 Fibre Wire 50 m for CANcab 251fiber 159
7.6.16 USB Cables 160
7.6.16.1 USB Cable 2.0 160
7.6.16.2 USB Cable 3.0 (A-B, 1.8m) 160
7.6.16.3 USB Cable 3.1 Type A-C (Dual Screw Lock) 161
7.6.16.4 USB Cable 3.1 Type C-C (Dual Screw Lock) 161
7.6.16.5 USB Cable 3.0 (Type B Conn. with Screws) 162

8 Power Supply 163

8.1 Vector Power Supply Units 164
8.1.1 Vector Power Supply 12V/1.5A 164
8.1.2 Vector Power Supply 12V/2.5A 164
8.1.3 Vector Power Supply ODU Mini-Snap 165
8.2 On-Board Power Supply 166
8.2.1 Car Power Supply Cable 12V with Binder 166
8.2.2 Cable Vehicle Input <> ODU Mini-Snap 166
8.3 Power Supply Cable 167
8.3.1 Cable Banana Plug <> Binder 3-pin 167
8.3.2 Cable Banana Plug <> ODU Mini-Snap 168
8.3.3 Power Adapter OBDII – ODU Mini Snap 168

9 Time Synchronization 169

9.1 Time Synchronization 170
9.1.1 General Information 170
9.1.2 Software Sync 172
9.1.3 Hardware Sync 173
9.2 SYNCcables 175
9.2.1 Vector SYNCcableXL 175

9.2.2 Vector SYNCcable50 ... 176
9.3 SYNCboxes ... 177
9.3.1 Multi SYNCbox External ... 177
9.3.2 Multi SYNCbox Internal ... 178
9.3.3 Multi SYNCbox Active ... 179
9.3.4 SyncBox XL ... 180

10 Miscellaneous ... 181

10.1 Mounting Equipment ... 182
10.1.1 VSH Cable Guard 216 ... 182
10.1.2 VSH Cable Guard 216 Clip ... 185
10.1.3 VSH Connection Kit 19" ... 186
10.1.4 VSH Connection Kit Horizontal ... 188
10.1.5 VSH Connection Kit Vertical ... 189
10.1.6 VSH Equipment Foot Kit ... 190
10.1.7 VSH Mounting Flange Kit ... 191
10.1.8 Fix Kit 32mm Device ... 192
10.1.9 Fix Kit 42mm Device ... 193
10.1.10 Fix Kit Large Device ... 194
10.2 Antennas ... 195
10.2.1 2.4 & 5 GHz Antenna SMA-R Std. ... 195
10.2.2 2.4 & 5.2 GHz Antenna SMA-R Asia ... 195
10.2.3 5.9 GHz DSRC Antenna SMA ... 196
10.2.4 GNSS Antenna SMA ... 196
10.3 SD/SDHC/SDXC Memory Cards ... 197
10.3.1 SD Memory Card (X82) 2 GB ... 197
10.3.2 SDHC Memory Card (X82) 8 GB ... 197
10.3.3 SDHC Memory Card (X) 16 GB ... 197
10.3.4 SDHC Memory Card (XQI8C016Z) 32 GB ... 197
10.3.5 SDXC Memory Card (GXQI8C016Z) 128GB ... 197
10.4 CFast Card Reader USB 3.0 (external) ... 198
10.5 Ser2K ... 198
10.6 Protection ... 199
10.6.1 USB Protector Type 1 ... 199
10.6.2 CANcaseXL log CardFix Kit – SD Card Protection ... 200
10.6.3 Front Panel for VN8900 ... 200
10.6.4 Protection Kit 1040 ... 201
10.6.4.1 Mounting Instructions ... 201

1 Introduction

In this chapter you find the following information:

1.1 About this User Manual 11
1.1.1 Warranty 12
1.1.2 Registered Trademarks 12
1.2 Important Notes 13
1.2.1 Safety Instructions and Hazard Warnings 13
1.2.2 Disclaimer 13
1.2.3 Disposal of Vector Hardware 14

1.1 About this User Manual

Conventions

In the two following charts you will find the conventions used in the user manual regarding utilized spellings and symbols.

Style	Utilization
bold	Blocks, surface elements, window- and dialog names of the software. Accentuation of warnings and advices. **[OK]** Push buttons in brackets **File|Save** Notation for menus and menu entries
`Source Code`	File name and source code.
Hyperlink	Hyperlinks and references.
<CTRL>+<S>	Notation for shortcuts.

Symbol	Utilization
	This symbol calls your attention to warnings.
	Here you can obtain supplemental information.
	Here you can find additional information.
	Here is an example that has been prepared for you.
	Step-by-step instructions provide assistance at these points.
	Instructions on editing files are found at these points.
	This symbol warns you not to edit the specified file.

1.1.1 Warranty

Restriction of warranty

We reserve the right to change the contents of the documentation and the software without notice. Vector Informatik GmbH assumes no liability for correct contents or damages which are resulted from the usage of the documentation. We are grateful for references to mistakes or for suggestions for improvement to be able to offer you even more efficient products in the future.

1.1.2 Registered Trademarks

Registered trademarks

All trademarks mentioned in this documentation and if necessary third party registered are absolutely subject to the conditions of each valid label right and the rights of particular registered proprietor. All trademarks, trade names or company names are or can be trademarks or registered trademarks of their particular proprietors. All rights which are not expressly allowed are reserved. If an explicit label of trademarks, which are used in this documentation, fails, should not mean that a name is free of third party rights.

- Windows, Windows 7, Windows 8.1, Windows 10, Windows 11 are trademarks of the Microsoft Corporation.

1.2 Important Notes

1.2.1 Safety Instructions and Hazard Warnings



Caution!
This accessory is designed for the operation of a Vector interface which may control and/or otherwise influence the behavior of control systems and electronic control units. The operation of such interface may lead to serious hazards for life, body and property. In order to avoid personal injuries and damage to property, you have to read and understand the safety instructions and hazard warnings which are applicable for the interface prior to its installation and use. Keep this documentation (manual) and the documentation of the interface always near the interface.

1.2.2 Disclaimer



Caution!
Claims based on defects and liability claims against Vector are excluded to the extent damages or errors are caused by improper use of the interface or use not according to its intended purpose. The same applies to damages or errors arising from insufficient training or lack of experience of personnel using the interface.

1.2.3 Disposal of Vector Hardware

Please handle old devices responsibly and observe the environmental laws applicable in your country. Please dispose of the Vector hardware only at the designated places and not with the household waste.

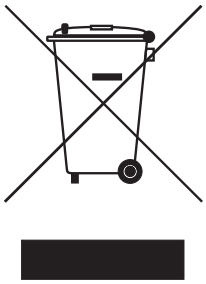

Within the European Community, the Directive on Waste Electrical and Electronic Equipment (WEEE Directive) and the Directive on the Restriction of the Use of Certain Hazardous Substances in Electrical and Electronic Equipment (RoHS Directive) apply.

For Germany and other EU countries, we offer free take-back of old Vector hardware.

Please carefully check the Vector hardware to be disposed of before shipping. Please remove all items that are not part of the original scope of delivery, e.g. storage media. The Vector hardware must also be free of licenses and must no longer contain any personal data. Vector does not perform any checks in this regard. Once the hardware has been shipped, it cannot be returned to you. By shipping the hardware to us, you have relinquished your rights to the hardware.
Before shipping, please register your old device via:

https://www.vector.com/int/en/support-downloads/return-registration-for-the-disposal-of-vector-hardware/

2 Accessories Finder

In this chapter you find the following information:

2.1 XL Interface Family 17
2.1.1 Accessories for CANboardXL (PCI, PCIe, PXI) 17
2.1.2 Accessories for CANcardXL 17
2.1.3 Accessories for CANcardXLe 18
2.1.4 Accessories for CANcaseXL 18
2.1.5 Accessories for CANcaseXL log 19

2.2 Accessories for VN0601 20

2.3 VN1500 Interface Family 21
2.3.1 Accessories for VN1530 21
2.3.2 Accessories for VN1531 21

2.4 VN1600 Interface Family 22
2.4.1 Accessories for VN1610 22
2.4.2 Accessories for VN1611 22
2.4.3 Accessories for VN1630A 22
2.4.4 Accessories for VN1640A 23
2.4.5 Accessories for VN1630 log 23
2.4.6 Accessories for VN1670 24

2.5 VN2600 Interface Family 25
2.5.1 Accessories for VN2610 25
2.5.2 Accessories for VN2640 25

2.6 VN3000 Interface Family 26
2.6.1 Accessories for VN3300 26
2.6.2 Accessories for VN3600 26

2.7 Accessories for VN4610 27

2.8 VN5000 Interface Family 28
2.8.1 Accessories for VN5240 28
2.8.2 Accessories for VN5430 28
2.8.3 Accessories for VN5610A 29
2.8.4 Accessories for VN5620 30
2.8.5 Accessories for VN5640 Option 1000BASE-T1 31
2.8.6 Accessories for VN5640 32
2.8.7 Accessories for VN5650 32

2.9 VN7500 Interface Family 34
2.9.1 Accessories for VN7570 34
2.9.2 Accessories for VN7572 35

2.10 VN7600 Interface Family 36
2.10.1 Accessories for VN7600 36
2.10.2 Accessories for VN7610 37
2.10.3 Accessories for VN7640 37

2.11 Accessories for VN8810 38

2.12 VN8900 Interface Family 39
2.12.1 Accessories for VN8910A 39
2.12.2 Accessories for VN8911 39
2.12.3 Accessories for VN8912A 40
2.12.4 Accessories for VN8914 40
2.12.5 Accessories for VN8950 41
2.12.6 Accessories for VN8970 41
2.12.7 Accessories for VN8972 42

2.1 XL Interface Family

2.1.1 Accessories for CANboardXL (PCI, PCIe, PXI)

Bus transceiver

- CAN-/LINpiggies (see section Compatibility with XL Interface Family on page 57)

Cables and connectors

- CANcable0 (page 120)
- CANcable1 (page 120)
- CANcableA (page 121)
- CANcable TnT (page 121)
- CANcable TnT Term (page 122)
- CANcable Y (page 122)
- CANterm 120 (page 124)
- CANcable Set Pro (page 124)
- Vector SYNCcableXL (page 175)
- Vector SYNCcable50 (page 176)
- Multi SYNCbox external (page 177)
- Multi SYNCbox internal (page 178)
- Multi SYNCbox active (page 179)
- Cable Binder 3pol Connector with Pigtail (page 146)

2.1.2 Accessories for CANcardXL

Bus transceiver

- CAN-/LINcabs (see section Compatibility with XL Interface Family on page 57)
- IOcab 8444opto (see section Compatibility with XL Interface Family on page 57)

Cables and connectors

- CANcable0 (page 120)
- CANcable1 (page 120)
- CANcableA (page 121)
- CANcable TnT (page 121)
- CANcable TnT Term (page 122)
- CANcable Y (page 122)
- CANterm 120 (page 124)
- CANcable Set Pro (page 124)
- Vector SYNCcableXL (page 175)
- Vector SYNCcable50 (page 176)
- SyncBox XL (page 180)
- Multi SYNCbox external (page 177)
- Multi SYNCbox internal (page 178)
- Multi SYNCbox active (page 179)
- Cable Binder 3pol Connector with Pigtail (page 146)

Miscellaneous

- CardSafe (page 199)

2.1.3 Accessories for CANcardXLe

Bus transceiver
- CAN-/LINcabs (see section Compatibility with XL Interface Family on page 57)
- TWINcabs (see section Compatibility with XL Interface Family on page 57)
- IOcab 8444opto (see section Compatibility with XL Interface Family on page 57)

Cables and connectors
- CANcable0 (page 120)
- CANcable1 (page 120)
- CANcableA (page 121)
- CANcable TnT (page 121)
- CANcable TnT Term (page 122)
- CANcable Y (page 122)
- CANterm 120 (page 124)
- CANcable Set Pro (page 124)
- Vector SYNCcableXL (page 175)
- Vector SYNCcable50 (page 176)
- SyncBox XL (page 180)
- Multi SYNCbox external (page 177)
- Multi SYNCbox internal (page 178)
- Multi SYNCbox active (page 179)
- Cable Binder 3pol Connector with Pigtail (page 146)

Miscellaneous
- CardSafe (page 199)

2.1.4 Accessories for CANcaseXL

Bus transceiver
- CAN-/LINpiggies (see section Compatibility with XL Interface Family on page 57)

Cables and connectors
- CANcable0 (page 120)
- CANcable1 (page 120)
- CANcableA (page 121)
- CANcable TnT (page 121)
- CANcable TnT Term (page 122)
- CANcable Y (page 122)
- CANterm 120 (page 124)
- CANcable Set Pro (page 124)
- Vector SYNCcableXL (page 175)
- Vector SYNCcable50 (page 176)
- Multi SYNCbox external (page 177)
- Multi SYNCbox internal (page 178)
- Multi SYNCbox active (page 179)
- Cable Binder 3pol Connector with Pigtail (page 146)
- USB Cable 2.0 (page 160)

Power supply
- Vector Power Supply 12V/1.5A (page 164)
- Cable Banana Plug <> Binder 3-pin (page 167)
- Car Power Supply Cable 12V with Binder (page 166)

Miscellaneous
- Fix Kit 32mm Device (page 192)

2.1.5 Accessories for CANcaseXL log

Bus transceiver
- CAN-/LINpiggies (see section Compatibility with XL Interface Family on page 57)

Cables and connectors
- CANcable0 (page 120)
- CANcable1 (page 120)
- CANcableA (page 121)
- CANcable TnT (page 121)
- CANcable TnT Term (page 122)
- CANcable Y (page 122)
- CANterm 120 (page 124)
- CANcable Set Pro (page 124)
- Vector SYNCcableXL (page 175)
- Vector SYNCcable50 (page 176)
- Multi SYNCbox external (page 177)
- Multi SYNCbox internal (page 178)
- Multi SYNCbox active (page 179)
- Cable Binder 3pol Connector with Pigtail (page 146)
- USB Cable 2.0 (page 160)

Power supply
- Vector Power Supply 12V/1.5A (page 164)
- Cable Banana Plug <> Binder 3-pin (page 167)
- Car Power Supply Cable 12V with Binder (page 166)

Miscellaneous
- Fix Kit 32mm Device (page 192)

2.2 Accessories for VN0601

Cables and connectors

- VNcable DSUB37 (page 154)
- Terminal Block DSUB37 (page 156)
- Vector SYNCcableXL (page 175)
- Vector SYNCcable50 (page 176)
- Multi SYNCbox external (page 177)
- Multi SYNCbox internal (page 178)
- Multi SYNCbox active (page 179)
- Cable Binder 3pol Connector with Pigtail (page 146)
- USB Cable 2.0 (page 160)

2.3 VN1500 Interface Family

2.3.1 Accessories for VN1530

Bus transceiver

- CAN-/LINpiggies (see section Compatibility with VN Interface Family on page 55)

Cables and connectors

- VNcable 3Y (page 155)
- CANterm 120 (page 124)
- Vector SYNCcableXL (page 175)
- Vector SYNCcable50 (page 176)
- Multi SYNCbox external (page 177)
- Multi SYNCbox internal (page 178)
- Multi SYNCbox active (page 179)
- Cable Binder 3pol Connector with Pigtail (page 146)

2.3.2 Accessories for VN1531

Bus transceiver

- CAN-/LINpiggies (see section Compatibility with VN Interface Family on page 55)

Cables and connectors

- VNcable 3Y (page 155)
- CANterm 120 (page 124)
- Vector SYNCcableXL (page 175)
- Vector SYNCcable50 (page 176)
- Multi SYNCbox external (page 177)
- Multi SYNCbox internal (page 178)
- Multi SYNCbox active (page 179)
- Cable Binder 3pol Connector with Pigtail (page 146)

2.4 VN1600 Interface Family

2.4.1 Accessories for VN1610

Cables and connectors

- CANcable0 (page 120)
- CANcable1 (page 120)
- CANcableA (page 121)
- CANcable Y (page 122)
- CANcable 2Y (page 123)
- CANterm 120 (page 124)
- CANcable Set Pro (page 124)

2.4.2 Accessories for VN1611

Cables and connectors

- CANcable0 (page 120)
- CANcable1 (page 120)
- CANcableA (page 121)
- CANcable Y (page 122)
- CANcable 2Y (page 123)
- CANterm 120 (page 124)
- CANcable Set Pro (page 124)

2.4.3 Accessories for VN1630A

Bus transceiver

- CAN-/LINpiggies (see section Compatibility with VN Interface Family on page 55)
- J1708 Piggyback (see section Compatibility with VN Interface Family on page 55)

Cables and connectors

- CANcable0 (page 120)
- CANcable1 (page 120)
- CANcableA (page 121)
- CANcable TnT (page 121)
- CANcable Y (page 122)
- CANcable 2Y (page 123)
- CANterm 120 (page 124)
- CANcable Set Pro (page 124)
- Vector SYNCcableXL (page 175)
- Vector SYNCcable50 (page 176)
- Multi SYNCbox external (page 177)
- Multi SYNCbox internal (page 178)

- Multi SYNCbox active (page 179)
- Cable Binder 3pol Connector with Pigtail (page 146)
- USB Cable 2.0 (page 160)

Miscellaneous

- Fix Kit 32mm Device (page 192)
- USB Protector Type 1 (page 199)

2.4.4 Accessories for VN1640A

Bus transceiver

- CAN-/LINpiggies (see section Compatibility with VN Interface Family on page 55)
- J1708 Piggyback (see section Compatibility with VN Interface Family on page 55)
- SENT Piggyback (see section Compatibility with VN Interface Family on page 55)

Cables and connectors

- CANcable0 (page 120)
- CANcable1 (page 120)
- CANcableA (page 121)
- CANcable TnT (page 121)
- CANcable Y (page 122)
- CANterm 120 (page 124)
- CANcable Set Pro (page 124)
- Vector SYNCcableXL (page 175)
- Vector SYNCcable50 (page 176)
- Multi SYNCbox external (page 177)
- Multi SYNCbox internal (page 178)
- Multi SYNCbox active (page 179)
- Cable Binder 3pol Connector with Pigtail (page 146)
- USB Cable 2.0 (page 160)

Miscellaneous

- Fix Kit 42mm Device (page 193)
- Protection Kit 1040 (page 201)
- USB Protector Type 1 (page 199)

2.4.5 Accessories for VN1630 log

Bus transceiver

- CAN-/LINpiggies (see section Compatibility with VN Interface Family on page 55)

Cables and connectors

- CANcable0 (page 120)
- CANcable1 (page 120)
- CANcableA (page 121)
- CANcable TnT (page 121)
- CANcable TnT Term (page 122)

- CANcable Y (page 122)
- CANcable 2Y (page 123)
- CANterm 120 (page 124)
- CANcable Set Pro (page 124)
- Vector SYNCcableXL (page 175)
- Vector SYNCcable50 (page 176)
- Multi SYNCbox external (page 177)
- Multi SYNCbox internal (page 178)
- Multi SYNCbox active (page 179)
- Cable Binder 3pol Connector with Pigtail (page 146)
- USB Cable 2.0 (page 160)

Power supply

- Cable Banana Plug <> Binder 3-pin (page 167)
- Car Power Supply Cable 12V with Binder (page 166)

Miscellaneous

- Fix Kit 32mm Device (page 192)
- SD/SDHC Memory Cards (page 197)

2.4.6 Accessories for VN1670

Bus transceiver

- CAN-/LINpiggies (see section Compatibility with VN Interface Family on page 55)

Cables and connectors

- VNcable 3Y (page 155)
- CANterm 120 (page 124)
- Vector SYNCcableXL (page 175)
- Vector SYNCcable50 (page 176)
- Multi SYNCbox external (page 177)
- Multi SYNCbox active (page 179)
- Cable Binder 3pol Connector with Pigtail (page 146)
- USB Cable 3.1 Type C-C (Dual Screw Lock) (page 161)
- Ethernet cables (page 133)

Power supply

- Vector Power Supply ODU Mini-Snap (page 165)
- Cable Vehicle Input <> ODU Mini-Snap (page 166)
- Cable Banana Plug <> ODU Mini-Snap (page 168)

Miscellaneous

- VSH Connecting Kit 19" (page 186)
- VSH Connecting Kit Horizontal (page 188)
- VSH Connecting Kit Vertical (page 189)
- VSH Equipment Foot Kit (page 190)
- VSH Mounting Flange (page 191)

2.5 VN2600 Interface Family

2.5.1 Accessories for VN2610

Cables and connectors
- Fiber Optic Cable (page 135)
- Fiber Optic Cable Coupling (page 136)
- Vector SYNCcableXL (page 175)
- Vector SYNCcable50 (page 176)
- Multi SYNCbox external (page 177)
- Multi SYNCbox internal (page 178)
- Multi SYNCbox active (page 179)
- Cable Binder 3pol Connector with Pigtail (page 146)
- USB Cable 2.0 (page 160)

Power supply
- Vector Power Supply 12V/1.5A (page 164)
- Cable Banana Plug <> Binder 3-pin (page 167)
- Car Power Supply Cable 12V with Binder (page 166)

Miscellaneous
- Fix Kit 32mm Device (page 192)

2.5.2 Accessories for VN2640

Cables and connectors
- Fiber Optic Cable (page 135)
- Fiber Optic Cable Coupling (page 136)
- ECL cable (page 135)
- Vector SYNCcableXL (page 175)
- Vector SYNCcable50 (page 176)
- Multi SYNCbox external (page 177)
- Multi SYNCbox internal (page 178)
- Multi SYNCbox active (page 179)
- Cable Binder 3pol Connector with Pigtail (page 146)
- USB Cable 2.0 (page 160)

Power supply
- Vector Power Supply 12V/1.5A (page 164)
- Cable Banana Plug <> Binder 3-pin (page 167)
- Car Power Supply Cable 12V with Binder (page 166)

Miscellaneous
- Fix Kit 32mm Device (page 192)

2.6 VN3000 Interface Family

2.6.1 Accessories for VN3300

Bus transceiver
- FRpiggies (see section Compatibility with VN Interface Family on page 55)

Cables and connectors
- FRcable A (page 137)
- FRcable AB (page 138)
- FRterm (page 138)
- FRcable Set (page 137)
- Vector SYNCcableXL (page 175)
- Vector SYNCcable50 (page 176)
- Multi SYNCbox external (page 177)
- Multi SYNCbox internal (page 178)
- Multi SYNCbox active (page 179)
- Cable Binder 3pol Connector with Pigtail (page 146)

2.6.2 Accessories for VN3600

Bus transceiver
- FRpiggies (see section Compatibility with VN Interface Family on page 55)

Cables and connectors
- FRcable A (page 137)
- FRcable AB (page 138)
- FRterm (page 138)
- FRcable Set (page 137)
- Vector SYNCcableXL (page 175)
- Vector SYNCcable50 (page 176)
- Multi SYNCbox external (page 177)
- Multi SYNCbox internal (page 178)
- Multi SYNCbox active (page 179)
- Cable Binder 3pol Connector with Pigtail (page 146)
- USB Cable 2.0 (page 160)

Power supply
- Vector Power Supply 12V/1.5A (page 164)
- Cable Banana Plug <> Binder 3-pin (page 167)
- Car Power Supply Cable 12V with Binder (page 166)

Miscellaneous
- Fix Kit 32mm Device (page 192)

2.7 Accessories for VN4610

Cables and connectors

- CANcable0 (page 120)
- CANcable1 (page 120)
- CANcableA (page 121)
- CANcable Y (page 122)
- CANterm 120 (page 124)
- CANcable Set Pro (page 124)
- Vector SYNCcableXL (page 175)
- Vector SYNCcable50 (page 176)
- Multi SYNCbox external (page 177)
- Multi SYNCbox internal (page 178)
- Multi SYNCbox active (page 179)
- Cable Binder 3pol Connector with Pigtail (page 146)
- USB Cable 2.0 (page 160)

Power supply

- Vector Power Supply 12V/1.5A (page 164)
- Cable Banana Plug <> Binder 3-pin (page 167)
- Car Power Supply Cable 12V with Binder (page 166)

Miscellaneous

- Fix Kit 42mm Device (page 193)
- 5.9 GHz DSRC Antenna SMA (page 196)
- GNSS Antenna SMA (page 196)
- Protection Kit 1040 (page 201)

2.8 VN5000 Interface Family

2.8.1 Accessories for VN5240

Cables and connectors
- AEcable 2Y (page 125)
- Vector SYNCcableXL (page 175)
- Vector SYNCcable50 (page 176)
- Multi SYNCbox external (page 177)
- Multi SYNCbox internal (page 178)
- Multi SYNCbox active (page 179)
- Cable Binder 3pol Connector with Pigtail (page 146)
- Ethernet cables (page 133)

Power supply
- Vector Power Supply ODU Mini-Snap (page 165)
- Cable Banana Plug <> ODU Mini-Snap (page 168)

Miscellaneous
- VSH Cable Guard 216 (page 182)
- VSH Cable Guard 216 Clip (page 185)
- VSH Connecting Kit 19" (page 186)
- VSH Connecting Kit Horizontal (page 188)
- VSH Connecting Kit Vertical (page 189)
- VSH Equipment Foot Kit (page 190)
- VSH Mounting Flange (page 191)

2.8.2 Accessories for VN5430

Cables and connectors
- AEcable 2Y (page 125)
- Vector SYNCcableXL (page 175)
- Vector SYNCcable50 (page 176)
- Multi SYNCbox external (page 177)
- Multi SYNCbox internal (page 178)
- Multi SYNCbox active (page 179)
- Cable Binder 3pol Connector with Pigtail (page 146)
- Ethernet cables (page 133)

Power supply
- Vector Power Supply 12V/1.5A (page 164)
- Cable Banana Plug <> Binder 3-pin (page 167)
- Car Power Supply Cable 12V with Binder (page 166)

Miscellaneous
- Fix Kit 32mm Device (page 192)

2.8.3 Accessories for VN5610A

Cables and connectors

- BRcable 2Y (page 130)
- VNcable D-SUB9 HSD Z (page 131)
- CANcable1 (page 120)
- CANcableA (page 121)
- CANcable TnT (page 121)
- CANcable Y (page 122)
- CANcable 2Y (page 123)
- CANterm 120 (page 124)
- CANcable Set Pro (page 124)
- Vector SYNCcableXL (page 175)
- Vector SYNCcable50 (page 176)
- Multi SYNCbox external (page 177)
- Multi SYNCbox internal (page 178)
- Multi SYNCbox active (page 179)
- Cable Binder 3pol Connector with Pigtail (page 146)
- Cable LEMO/Banana Plugs (page 158)
- USB Cable 2.0 (page 160)

Power supply

- Vector Power Supply 12V/1.5A (page 164)
- Cable Banana Plug <> Binder 3-pin (page 167)
- Car Power Supply Cable 12V with Binder (page 166)

Miscellaneous

- Fix Kit 32mm Device (page 192)

2.8.4 Accessories for VN5620

Cables and connectors

- AEcable 2Y (page 125)
- CANcable1 (page 120)
- CANcableA (page 121)
- CANcable TnT (page 121)
- CANcable Y (page 122)
- CANcable 2Y (page 123)
- CANterm 120 (page 124)
- CANcable Set Pro (page 124)
- Vector SYNCcableXL (page 175)
- Vector SYNCcable50 (page 176)
- Multi SYNCbox external (page 177)
- Multi SYNCbox internal (page 178)
- Multi SYNCbox active (page 179)
- Cable Binder 3pol Connector with Pigtail (page 146)
- Cable LEMO/Banana Plugs (page 158)
- USB Cable 3.1 Type A-C (Dual Screw Lock) (page 161)
- USB Cable 3.1 Type C-C (Dual Screw Lock) (page 161)
- Ethernet cables (page 133)

Power supply

- Vector Power Supply 12V/1.5A (page 164)
- Cable Banana Plug <> Binder 3-pin (page 167)
- Car Power Supply Cable 12V with Binder (page 166)

Miscellaneous

- Fix Kit 32mm Device (page 192)

2.8.5 Accessories for VN5640 Option 1000BASE-T1

Cables and connectors

- AEcable 2Y (page 125)
- BRcable 2Y (page 130)
- VNcable D-SUB9 HSD Z (page 131)
- CANcable1 (page 120)
- CANcableA (page 121)
- CANcable TnT (page 121)
- CANcable Y (page 122)
- CANcable 2Y (page 123)
- CANterm 120 (page 124)
- CANcable Set Pro (page 124)
- Vector SYNCcableXL (page 175)
- Vector SYNCcable50 (page 176)
- Multi SYNCbox external (page 177)
- Multi SYNCbox internal (page 178)
- Multi SYNCbox active (page 179)
- Cable Binder 3pol Connector with Pigtail (page 146)
- USB Cable 3.0 (page 160)
- Ethernet cables (page 133)

Power supply

- Vector Power Supply ODU Mini-Snap (page 165)
- Cable Vehicle Input <> ODU Mini-Snap (page 166)
- Cable Banana Plug <> ODU Mini-Snap (page 168)

Miscellaneous

- Fix Kit Large Device (page 194)

2.8.6 Accessories for VN5640

Cables and connectors
- AEcable 2Y (page 125)
- BRcable 2Y (page 130)
- VNcable D-SUB9 HSD Z (page 131)
- CANcable Y (page 122)
- CANcable 2Y (page 123)
- CANterm 120 (page 124)
- CANcable Set Pro (page 124)
- Vector SYNCcableXL (page 175)
- Vector SYNCcable50 (page 176)
- Multi SYNCbox external (page 177)
- Multi SYNCbox internal (page 178)
- Multi SYNCbox active (page 179)
- Cable Binder 3pol Connector with Pigtail (page 146)
- USB Cable 3.0 (page 160)
- Ethernet cables (page 133)

Power supply
- Vector Power Supply ODU Mini-Snap (page 165)
- Cable Vehicle Input <> ODU Mini-Snap (page 166)
- Cable Banana Plug <> ODU Mini-Snap (page 168)

Miscellaneous
- Fix Kit Large Device (page 194)

2.8.7 Accessories for VN5650

Cables and connectors
- AEcable 2Y (page 125)
- CANcable0 (page 120)
- CANcable1 (page 120)
- CANcableA (page 121)
- CANcable Y (page 122)
- CANcable 2Y (page 123)
- CANterm 120 (page 124)
- CANcable Set Pro (page 124)
- Vector SYNCcableXL (page 175)
- Vector SYNCcable50 (page 176)
- Multi SYNCbox external (page 177)
- Multi SYNCbox internal (page 178)
- Multi SYNCbox active (page 179)
- Cable Binder 3pol Connector with Pigtail (page 146)
- USB Cable 3.1 Type A-C (Dual Screw Lock) (page 161)
- USB Cable 3.1 Type C-C (Dual Screw Lock) (page 161)
- Ethernet cables (page 133)

Power supply
- Vector Power Supply ODU Mini-Snap (page 165)

- Cable Banana Plug <> ODU Mini-Snap (page 168)

Miscellaneous

- VSH Cable Guard 216 (page 182)
- VSH Cable Guard 216 Clip (page 185)
- VSH Connecting Kit 19" (page 186)
- VSH Connecting Kit Horizontal (page 188)
- VSH Connecting Kit Vertical (page 189)
- VSH Equipment Foot Kit (page 190)
- VSH Mounting Flange (page 191)

2.9 VN7500 Interface Family

2.9.1 Accessories for VN7570

Bus transceiver

- FRpiggies (see section Compatibility with VN Interface Family on page 55)
- CAN-/LINpiggies (see section Compatibility with VN Interface Family on page 55)
- IOpiggy 8642 (see section Compatibility with VN Interface Family on page 55)

Cables and connectors

- Breakout Box D62Y9 (page 130)
- VNcable DSUB62 for Breakout Box (page 150)
- VNcable DSUB62 A (page 151)
- VNcable DSUB62 B (page 152)
- VNcable D62Y9 (page 153)
- FRcable A (page 137)
- FRcable AB (page 138)
- FRterm (page 138)
- FRcable Set (page 137)
- CANcable0 (page 120)
- CANcable1 (page 120)
- CANcableA (page 121)
- CANcable TnT (page 121)
- CANcable TnT Term (page 122)
- CANcable Y (page 122)
- CANterm 120 (page 124)
- CANcable Set Pro (page 124)
- Vector SYNCcableXL (page 175)
- Vector SYNCcable50 (page 176)
- Multi SYNCbox external (page 177)
- Multi SYNCbox internal (page 178)
- Multi SYNCbox active (page 179)
- Cable Binder 3pol Connector with Pigtail (page 146)

2.9.2 Accessories for VN7572

Bus transceiver

- FRpiggies (see section Compatibility with VN Interface Family on page 55)
- CAN-/LINpiggies (see section Compatibility with VN Interface Family on page 55)
- IOpiggy 8642 (see section Compatibility with VN Interface Family on page 55)

Cables and connectors

- Breakout Box D62Y9 (page 130)
- VNcable DSUB62 for Breakout Box (page 150)
- VNcable DSUB62 A (page 151)
- VNcable DSUB62 B (page 152)
- VNcable D62Y9 (page 153)
- FRcable A (page 137)
- FRcable AB (page 138)
- FRterm (page 138)
- FRcable Set (page 137)
- CANcable0 (page 120)
- CANcable1 (page 120)
- CANcableA (page 121)
- CANcable TnT (page 121)
- CANcable TnT Term (page 122)
- CANcable Y (page 122)
- CANterm 120 (page 124)
- CANcable Set Pro (page 124)
- Vector SYNCcableXL (page 175)
- Vector SYNCcable50 (page 176)
- Multi SYNCbox external (page 177)
- Multi SYNCbox internal (page 178)
- Multi SYNCbox active (page 179)
- Cable Binder 3pol Connector with Pigtail (page 146)

2.10 VN7600 Interface Family

2.10.1 Accessories for VN7600

Bus transceiver

- FRpiggies (see section Compatibility with VN Interface Family on page 55)
- CAN-/LINpiggies (see section Compatibility with VN Interface Family on page 55)

Cables and connectors

- FRcable A (page 137)
- FRcable AB (page 138)
- FRterm (page 138)
- FRcable Set (page 137)
- CANcable0 (page 120)
- CANcable1 (page 120)
- CANcableA (page 121)
- CANcable TnT (page 121)
- CANcable TnT Term (page 122)
- CANcable Y (page 122)
- CANterm 120 (page 124)
- CANcable Set Pro (page 124)
- Vector SYNCcableXL (page 175)
- Vector SYNCcable50 (page 176)
- Multi SYNCbox external (page 177)
- Multi SYNCbox internal (page 178)
- Multi SYNCbox active (page 179)
- Cable Binder 3pol Connector with Pigtail (page 146)
- USB Cable 2.0 (page 160)

Power supply

- Vector Power Supply 12V/1.5A (page 164)
- Cable Banana Plug <> Binder 3-pin (page 167)
- Car Power Supply Cable 12V with Binder (page 166)

Miscellaneous

- Fix Kit 42mm Device (page 193)
- Protection Kit 1040 (page 201)

2.10.2 Accessories for VN7610

Cables and connectors

- FR/CANcable 2Y (page 139)
- FRcable A (page 137)
- FRcable AB (page 138)
- FRterm (page 138)
- FRcable Set (page 137)
- CANcable0 (page 120)
- CANcable1 (page 120)
- CANcableA (page 121)
- CANcable TnT (page 121)
- CANcable Y (page 122)
- CANterm 120 (page 124)
- CANcable Set Pro (page 124)

2.10.3 Accessories for VN7640

Bus transceiver

- FRpiggies (see section Compatibility with VN Interface Family on page 55)
- CAN-/LINpiggies (see section Compatibility with VN Interface Family on page 55)

Cables and connectors

- FRcable A (page 137)
- FRcable AB (page 138)
- FRterm (page 138)
- FRcable Set (page 137)
- CANcable0 (page 120)
- CANcable1 (page 120)
- CANcableA (page 121)
- CANcable Y (page 122)
- CANterm 120 (page 124)
- CANcable Set Pro (page 124)
- Vector SYNCcableXL (page 175)
- Vector SYNCcable50 (page 176)
- Multi SYNCbox external (page 177)
- Multi SYNCbox internal (page 178)
- Multi SYNCbox active (page 179)
- Cable Binder 3pol Connector with Pigtail (page 146)
- USB Cable 2.0 (page 160)
- Ethernet cables (page 133)

Power supply

- Vector Power Supply 12V/1.5A (page 164)
- Cable Banana Plug <> Binder 3-pin (page 167)

Miscellaneous

- Fix Kit 42mm Device (page 193)
- Protection Kit 1040 (page 201)

2.11 Accessories for VN8810

Cables and connectors

- OBDcable VN88 (page 143)
- OBDcable VN88A (page 144)
- Breakout Box VN88 (page 157)
- Vector SYNCcableXL (page 175)
- Vector SYNCcable50 (page 176)
- SyncBox XL (page 180)
- Multi SYNCbox external (page 177)
- Multi SYNCbox internal (page 178)
- Multi SYNCbox active (page 179)
- Cable Binder 3pol Connector with Pigtail (page 146)
- USB Cable 3.0 (page 160)

Power supply

- Vector Power Supply ODU Mini-Snap (page 165)
- Cable Vehicle Input <> ODU Mini-Snap (page 166)
- Cable Banana Plug <> ODU Mini-Snap (page 168)
- Power Adapter OBDII – ODU Mini Snap (page 168)

Miscellaneous

- 2.4 & 5 GHz Antenna SMA-R Std. (page 195)
- 2.4 & 5.2 GHz Antenna SMA-R Asia (page 195)
- CFast Card Reader USB 3.0 (external) (page 198)

2.12 VN8900 Interface Family

2.12.1 Accessories for VN8910A

Cables and connectors
- Vector SYNCcableXL (page 175)
- Vector SYNCcable50 (page 176)
- Multi SYNCbox external (page 177)
- Multi SYNCbox internal (page 178)
- Multi SYNCbox active (page 179)
- Cable Binder 3pol Connector with Pigtail (page 146)
- USB Cable 2.0 (page 160)
- Ethernet cables (page 133)

Power supply
- Vector Power Supply ODU Mini-Snap (page 165)
- Cable Vehicle Input <> ODU Mini-Snap (page 166)
- Cable Banana Plug <> ODU Mini-Snap (page 168)

Miscellaneous
- Fix Kit Large Device (page 194)
- Front Panel for VN8900 (page 200)

2.12.2 Accessories for VN8911

Cables and connectors
- Vector SYNCcableXL (page 175)
- Vector SYNCcable50 (page 176)
- Multi SYNCbox external (page 177)
- Multi SYNCbox internal (page 178)
- Multi SYNCbox active (page 179)
- Cable Binder 3pol Connector with Pigtail (page 146)
- USB Cable 3.0 (page 160)
- Ethernet cables (page 133)

Power supply
- Vector Power Supply ODU Mini-Snap (page 165)
- Car Power Supply Cable 12V with Binder (page 166)
- Cable Vehicle Input <> ODU Mini-Snap (page 166)
- Cable Banana Plug <> ODU Mini-Snap (page 168)

Miscellaneous
- Fix Kit Large Device (page 194)
- SD/SDHC/SDXC Memory Cards (page 197)
- Front Panel for VN8900 (page 200)
- CFast Card Reader USB 3.0 (external) (page 198)

2.12.3 Accessories for VN8912A

Cables and connectors

- Vector SYNCcableXL (page 175)
- Vector SYNCcable50 (page 176)
- Multi SYNCbox external (page 177)
- Multi SYNCbox internal (page 178)
- Multi SYNCbox active (page 179)
- Cable Binder 3pol Connector with Pigtail (page 146)
- USB Cable 3.0 (page 160)
- Ethernet cables (page 133)

Power supply

- Vector Power Supply ODU Mini-Snap (page 165)
- Cable Vehicle Input <> ODU Mini-Snap (page 166)
- Cable Banana Plug <> ODU Mini-Snap (page 168)

Miscellaneous

- Fix Kit Large Device (page 194)
- Front Panel for VN8900 (page 200)
- CFast Card Reader USB 3.0 (external) (page 198)

2.12.4 Accessories for VN8914

Cables and connectors

- Vector SYNCcableXL (page 175)
- Vector SYNCcable50 (page 176)
- Multi SYNCbox external (page 177)
- Multi SYNCbox internal (page 178)
- Multi SYNCbox active (page 179)
- Cable Binder 3pol Connector with Pigtail (page 146)
- USB Cable 3.0 (page 160)
- USB Cable 3.0 (Type B Conn. with Screws) (page 162)
- Ethernet cables (page 133)

Power supply

- Vector Power Supply ODU Mini-Snap (page 165)
- Car Power Supply Cable 12V with Binder (page 166)
- Cable Vehicle Input <> ODU Mini-Snap (page 166)
- Cable Banana Plug <> ODU Mini-Snap (page 168)

Miscellaneous

- Fix Kit Large Device (page 194)
- SD/SDHC/SDXC Memory Cards (page 197)
- Front Panel for VN8900 (page 200)
- CFast Card Reader USB 3.0 (external) (page 198)

2.12.5 Accessories for VN8950

Bus transceiver

- CAN-/LINpiggies (see section Compatibility with VN Interface Family on page 55)
- IOpiggy 8642 (see section Compatibility with VN Interface Family on page 55)

Cables and connectors

- CANcable0 (page 120)
- CANcable1 (page 120)
- CANcableA (page 121)
- CANcable TnT (page 121)
- CANcable TnT Term (page 122)
- CANcable Y (page 122)
- CANterm 120 (page 124)
- CANcable Set Pro (page 124)

2.12.6 Accessories for VN8970

Bus transceiver

- FRpiggies (see section Compatibility with VN Interface Family on page 55)
- CAN-/LINpiggies (see section Compatibility with VN Interface Family on page 55)
- IOpiggy 8642 (see section Compatibility with VN Interface Family on page 55)

Cables and connectors

- FRcable A (page 137)
- FRcable AB (page 138)
- FRterm (page 138)
- FRcable Set (page 137)
- CANcable0 (page 120)
- CANcable1 (page 120)
- CANcableA (page 121)
- CANcable TnT (page 121)
- CANcable TnT Term (page 122)
- CANcable Y (page 122)
- CANcable 2Y (page 123)
- CANterm 120 (page 124)
- CANcable Set Pro (page 124)

2.12.7 Accessories for VN8972

Bus transceiver

- FRpiggies (see section Compatibility with VN Interface Family on page 55)
- CAN-/LINpiggies (see section Compatibility with VN Interface Family on page 55)
- IOpiggy 8642 (see section Compatibility with VN Interface Family on page 55)

Cables and connectors

- FRcable A (page 137)
- FRcable AB (page 138)
- FRterm (page 138)
- FRcable Set (page 137)
- CANcable0 (page 120)
- CANcable1 (page 120)
- CANcableA (page 121)
- CANcable TnT (page 121)
- CANcable TnT Term (page 122)
- CANcable Y (page 122)
- CANcable 2Y (page 123)
- CANterm 120 (page 124)
- CANcable Set Pro (page 124)

3 Transceiver - Products

In this chapter you find the following information:

3.1 Piggybacks 44
3.1.1 CAN High-Speed 45
3.1.2 CAN Low-Speed (fault tolerant) 45
3.1.3 LIN 46
3.1.4 Single Wire CAN 46
3.1.5 Truck & Trailer CAN 46
3.1.6 Digital/Analog IO 46
3.1.7 J1708 46
3.1.8 FlexRay 47
3.1.9 Sensors 47
3.1.10 Electrical Isolation 48
3.2 Cabs 50
3.2.1 CAN High-Speed 50
3.2.2 CAN Low-Speed (fault tolerant) 51
3.2.3 LIN 51
3.2.4 Single Wire CAN 51
3.2.5 Truck & Trailer CAN 51
3.2.6 Digital/Analog IO 51
3.2.7 J1708 52
3.3 TWINcabs 53
3.3.1 CAN High-/Low-Speed (fault tolerant) 53
3.3.2 LIN 53
3.4 Other Designs 54
3.5 Compatibility with VN Interface Family 55
3.6 Compatibility with XL Interface Family 57

3.1 Piggybacks

Properties

A Piggyback implements the interconnection of the network interface to a specific bus (e. g. CAN/LIN/IO/FlexRay) by the use of various transceivers. The Piggyback is inserted in the network interface and can be replaced according to the bus requirements (please take note of the instructions in the network interface user manual).

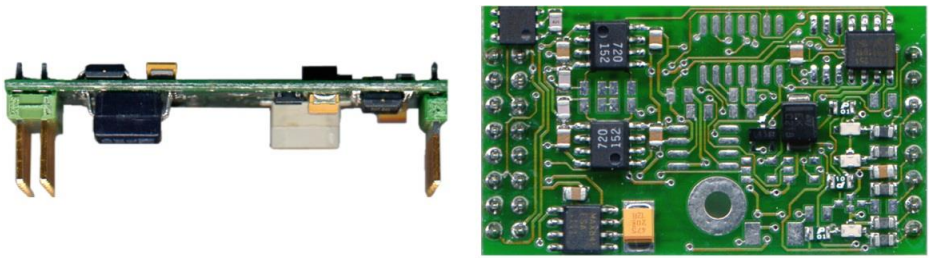

Figure 1: Piggyback

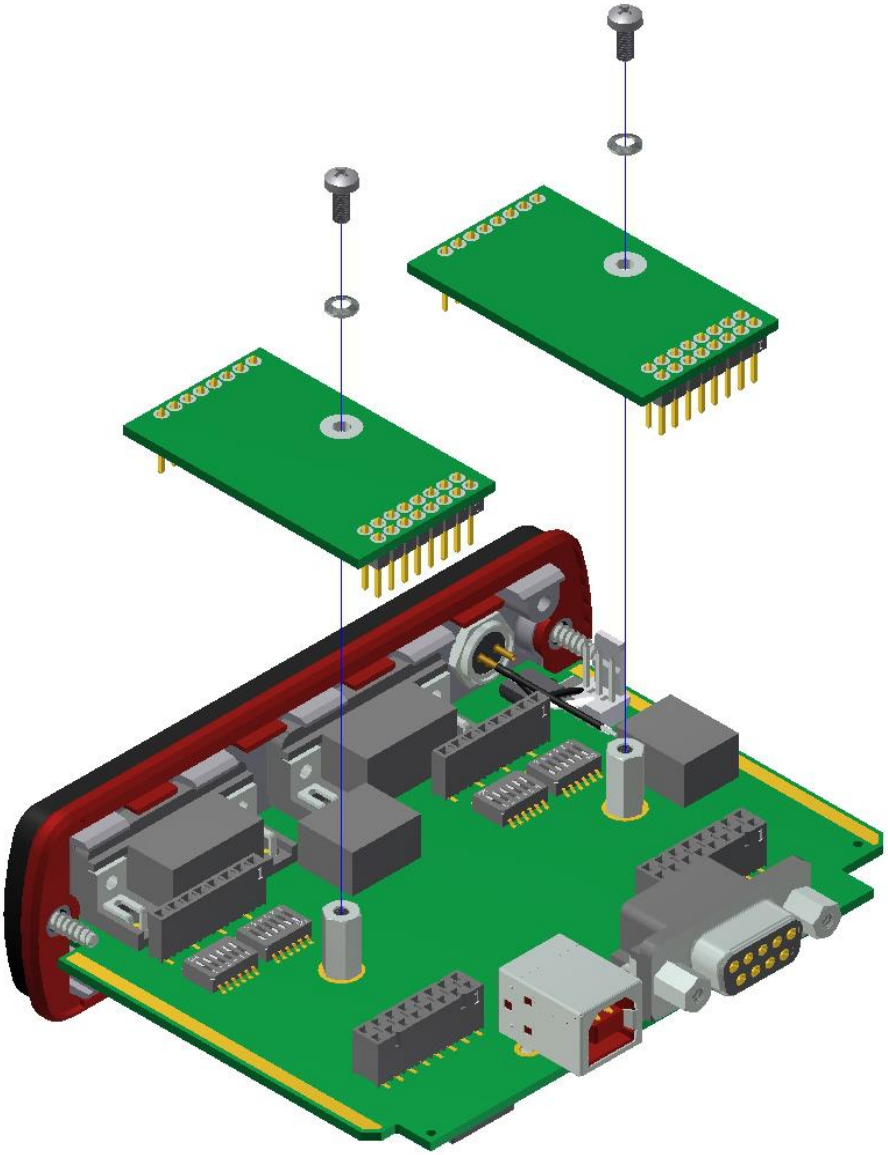

Figure 2: Example with VN1630A

3.1.1 CAN High-Speed

CANpiggy	Transceiver	Description	Part no.
251	82C251	Without galvanic isolation.	*
251mag	82C251	Magnetically decoupled.	*
251opto	82C251	Optically decoupled.	*
1040mag	TJA1040	Magnetically decoupled. Useful for partially powered networks.	*
1041Amag	TJA1041A	Magnetically decoupled, wake-up capable.	22082
1041Aopto	TJA1041A	Optically decoupled, wake-up capable.	*
1050	TJA1050	Without galvanic isolation.	*
1050mag	TJA1050	Magnetically decoupled.	*
1050opto	TJA1050	Optically decoupled.	*
1051cap	TJA1051	Capacitively decoupled. Suitable for - 2 Mbit/s CAN - CAN FD up to 5 Mbit/s guaranteed in simple networks - (8 Mbit/s depending on topology, P2P)	22122
1057Gcap	TJA1057G	Capacitively decoupled. Suitable for - 2 Mbit/s CAN - CAN FD up to 5 Mbit/s guaranteed in simple networks - (8 Mbit/s depending on topology, P2P)	22070
1462BT	TJA1462BT	Electrically decoupled. Suitable for: - 1 Mbit/s CAN - higher than 5 Mbit/s CAN FD (CAN SIC) with many nodes and longer stubs - higher than 8 Mbit/s in peer-to-peer networks (CAN SIC)	22555

* discontinued

3.1.2 CAN Low-Speed (fault tolerant)

CANpiggy	Transceiver	Description	Part no.
1054	TJA1054	Without galvanic isolation.	*
1054opto	TJA1054	Optically decoupled. Switchable terminating resistor.	*
1054mag	TJA1054	Magnetically decoupled. Switchable terminating resistor.	*
1055cap	TJA1055	Capacitively decoupled. Switchable terminating resistor.	22069

* discontinued

3.1.3 LIN

LINpiggy	Transceiver	Description	Part no.
7259	TLE7259-3GE	Electrically decoupled. Compatible to LIN2.x physical layer (12 V and 24 V). Provides dominant and recessive stress functionality.	22567
7269mag	TLE7269	Magnetically decoupled. Compatible to LIN2.x physical layer (12 V and 24 V). Provides dominant and recessive stress functionality.	22093

3.1.4 Single Wire CAN

CANpiggy	Transceiver	Description	Part no.
5790opto c	AU5790	Optically decoupled. 100 Ω resistance can be activated automatically upon switching over to high-speed mode. External power supply required.	*
7356cap	NCV7356	Capacitively decoupled. 100 Ω resistance can be activated automatically upon switching over to high-speed mode. External power supply required.	22244

* discontinued

3.1.5 Truck & Trailer CAN

CANpiggy	Transceiver	Description	Part no.
10011opto	B10011S	Optically decoupled. External power supply required.	22031

3.1.6 Digital/Analog IO

IOpiggy	Transceiver	Description	Part no.
8642	-	For the VN8900 interface family. Used for generation and measurement of analog and digital signals (see section IOpiggy 8642 on page 108).	22208

3.1.7 J1708

J1708piggy	Transceiver	Description	Part no.
65176opto	SN65176B	Optically decoupled.	22060

3.1.8 FlexRay

FRpiggy	Transceiver	Description	Part no.
1080	2x TJA1080 (Ch A and B)	Without galvanic isolation.	*
1080Amag	2x TJA1080A (Ch A and B)	Magnetically decoupled.	*
1082cap	2x TJA1082 (Ch A and B)	Capacitively decoupled. With trigger feature.	22099

* discontinued

FRpiggyC	Transceiver	Description	Part no.
1082cap	2x TJA1082 (Ch A and B)	Compact FRpiggy. Capacitively decoupled. With trigger feature.	22121

3.1.9 Sensors

SENSORpiggy	Description	Part no.
SENT	SAE J2716 compatible Piggyback.	22435

3.1.10 Electrical Isolation

3.1.10.1 CANpiggy

Without external power supply

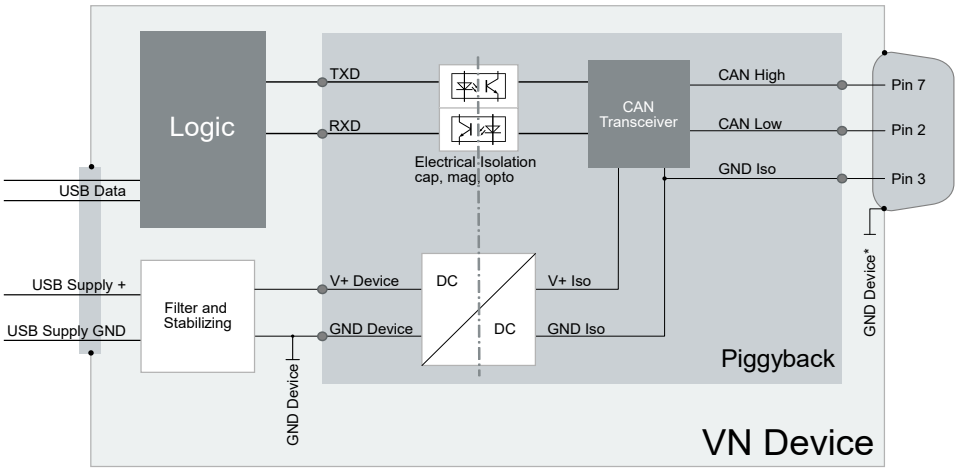

Figure 3: CANpiggy without external power supply

With external power supply

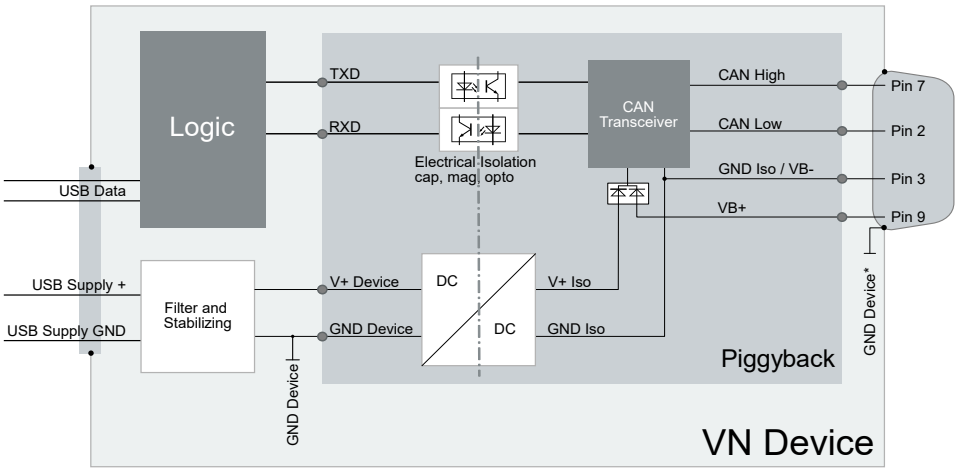

Figure 4: CANpiggy with external power supply

* connection of the D-SUB shell to the device housing depends on the device

3.1.10.2 LINpiggy

Switchable external power supply

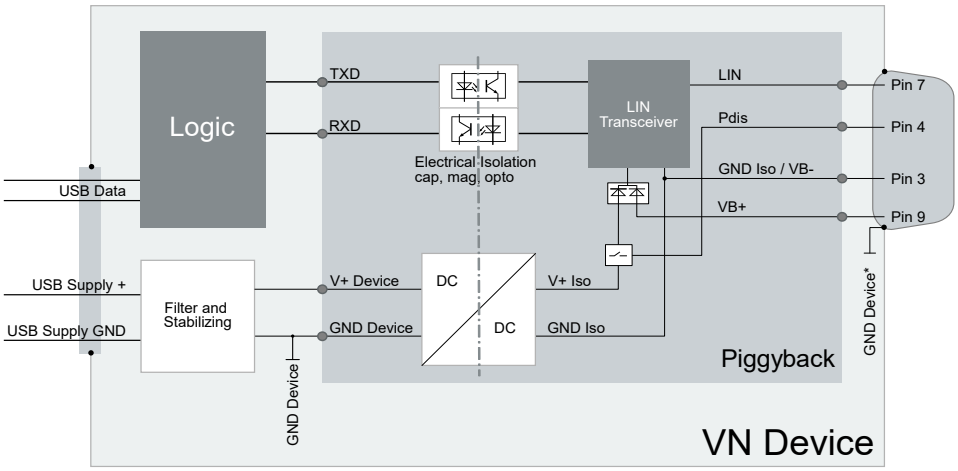

Figure 5: LINpiggy with switchable external power supply

* connection of the D-SUB shell to the device housing depends on the device

3.2 Cabs

Properties

Cabs are designed for use with CANcardXL/CANcardXLe and implement the interconnection of the network interface to a specific bus (e. g. CAN/LIN/IO) by the use of various transceivers. Cabs are connected to CANcardXL/CANcardXLe and can be changed according to the bus requirements.

Cab with one D-SUB connector



Figure 6: Cab with a single channel

Technical data

Channels	1
Housing	ABS plastic
Dimensions	100 mm x 16 mm x 16 mm (4.0 x 0.6 x 0.6 in)
Cable length	Approx. 30 cm (1 ft.) at both ends
Weight	Approx. 100 g (3.5 oz.)
Connectors	PC side: 15-pin plug-type connector to CANcardXL/XLe Bus side: D-SUB9 connector per DIN 41652

3.2.1 CAN High-Speed

CANcab	Transceiver	Description	Part no.
251	82C251	Without galvanic isolation.	22003
251mag	82C251	Magnetically decoupled.	22049
251opto	82C251	Optically decoupled.	22008
251fibre	PCA82C251	Two wire fiber optic cable.	22058
1040mag	TJA1040	Magnetically decoupled. Useful for partially powered networks.	22080
1041Amag	TJA1041A	Magnetically decoupled, wake-up capable.	22078
1041Aopto	TJA1041A	Optically decoupled, wake-up capable.	*
1050	TJA1050	Without galvanic isolation.	*
1050mag	TJA1050	Magnetically decoupled.	22079
1050opto	TJA1050	Optically decoupled.	*

* discontinued

3.2.2 CAN Low-Speed (fault tolerant)

CANcab	Transceiver	Description	Part no.
1054	TJA1054	Without galvanic isolation.	*
1054opto	TJA1054	Optically decoupled. Switchable terminating resistor.	*
1054mag	TJA1054	Magnetically decoupled. Switchable terminating resistor.	22081

* discontinued

3.2.3 LIN

LINcab	Transceiver	Description	Part no.
7269mag	TLE7269	Magnetically decoupled. Compatible to LIN2.x physical layer (12 V and 24 V). Provides dominant and recessive stress functionality.	22094

3.2.4 Single Wire CAN

CANcab	Transceiver	Description	Part no.
5790c	AU5790	Without galvanic isolation. 100 Ω resistance can be activated automatically upon switching over to high-speed mode. External power supply required.	*
5790opto c	AU5790	Optically decoupled. 100 Ω resistance can be activated automatically upon switching over to high-speed mode. External power supply required.	22051

* discontinued

3.2.5 Truck & Trailer CAN

CANcab	Transceiver	Description	Part no.
10011opto	B10011S	Optically decoupled. External power supply required.	22055

3.2.6 Digital/Analog IO

IOcab	Transceiver	Description	Part no.
8444opto	-	Used for generation and measurement of analog and digital signals(see section IOcab 8444opto on page 92).	22067

3.2.7 J1708

J1708cab	Transceiver	Description	Part no.
65176opto	SN65176B	Optically decoupled.	22056

3.3 TWINcabs

Properties

The TWINcab merges two Cabs in one and is designed for use with CANcardXLe. One TWINcab offers two channels. The channel numbers are either 1/3 or 2/4 depending on the used connector on the CANcardXLe. If two TWINcabs on one CANcardXLe are being used, four channels are available at the same time.

Note
The TWINcabs cannot be used with CANcardXL.

TWINcab with two D-SUB connectors



Figure 7: Example TWINcab with 2x CAN

Technical data

Channels	2
Housing	ABS plastic
Dimensions	110 mm x 35 mm x 17 mm (4.3 x 1.3 x 0.67 in)
Cable length	Approx. 30 cm (1 ft.) at both ends
Weight	Approx. 105 g (3.75 oz)
Connectors	PC side: 15-pin plug-type connector to CANcardXLe Bus side: 2x D-SUB9 connector per DIN 41652
Insulation voltage	Defined by network interface

3.3.1 CAN High-/Low-Speed (fault tolerant)

TWINcab	Transceiver	Description	Part no.
2x 1041Amag	2x TJA1041A	Magnetically decoupled.	22086
1x 1041Amag 1x 1054A	1x TJA1041A 1x TJA1054A	Magnetically decoupled. With one high-speed and one low-speed transceiver. Wakeup-capable.	22092

3.3.2 LIN

TWINcab	Transceiver	Description	Part no.
2x 7269mag	2x TLE7269	Compatible to LIN2.x physical layer (12 V and 24 V). Provides dominant and recessive stress functionality.	22088

3.4 Other Designs

Cab	Transceiver	Description	Part no.
EVA	User-specific	Evaluation kit: Mounting of the CANcab user-specifically with bus transceivers using pre-assembled breadboards (see section CANcab EVA on page 87).	22009

3.5 Compatibility with VN Interface Family

Transceiver

Suitable transceivers (Piggybacks) for your network interface can be found in the following table.

	Transceiver	VN1500 Interface Family	VN1600 Interface Family	VN1670	VN3300 / VN3600	VN7570	VN7572	VN7600	VN7640	VN8950	VN8970	VN8972
CAN High-Speed	251	-	X	-	-	-	-	X	-	-	-	-
	251opto	-	-	-	-	O	O	X	-	O	O	O
	251mag	O	X	-	-	X	X	X	O	X	X	X
	251fibre	-	-	-	-	-	-	-	-	-	-	-
	1040mag	O	X	-	-	X	X	X	X	X	X	X
	1041opto	-	-	-	-	O	O	X	-	O	O	O
	1041Aopto	-	-	-	-	O	O	X	-	O	O	O
	1041Amag	X	X	X	-	X	X	X	X	X	X	X
	1050	-	O	-	-	-	-	X	-	-	-	-
	1050opto	-	-	-	-	O	O	X	-	O	O	O
	1050mag	O	X	-	-	X	X	X	X	X	X	X
	1051cap	X	X	X	-	X	X	X	X	X	X	X
	1057Gcap	X	X	X	-	X	X	X	X	X	X	X
	1462BT	X	X	X	-	X	X	-	X	-	X	X
CAN Low-Speed	1054	-	O	-	-	-	-	X	-	-	-	-
	1054opto	-	-	-	-	O	-	X	-	O	O	-
	1054mag	-	X	-	-	X	-	X	-	X	X	-
	1055cap	X	X	X	-	X	X	X	X	X	X	X
Single Wire CAN	5790c	-	O	-	-	-	-	O	-	-	-	-
	5790opto c	-	X	-	-	X	O	X	-	X	X	O
	7356cap	X	X	-	-	X	X	X	X	X	X	X
Truck & Trailer CAN	10011opto	-	-	-	-	X	X	X	-	X	X	X
LIN	6258opto	-	-	-	-	-	-	-	-	-	-	-
	6259opto	-	-	-	-	-	-	-	-	-	-	-
	6259mag	-	X	-	-	X	X	-	-	X	X	X
	7259mag	-	X	-	-	X	X	-	-	X	X	X
	7259	X	X[2]	X	-	-	X	-	X	-	X	X
	7269mag	X	X	-	-	X	X	-	X	X	X	X
FlexRay	1080	-	-	-	X	-	-	X	-	-	-	-
	1080mag	-	-	-	X	-	-	X	-	-	X	-
	1080Amag	-	-	-	X	-	-	X	-	-	X	-
	1082cap	-	-	-	X	X[1]	X[1]	X	X[1]	-	X	X[1]

Miscellaneous

Transceiver	VN1500 Interface Family	VN1600 Interface Family	VN1670	VN3300 / VN3600	VN7570	VN7572	VN7600	VN7640	VN8950	VN8970	VN8972
8444opto	-	-	-	-	-	-	-	-	-	-	-
8642	-	-	-	-	X	X	-	-	X	X	X
J1708 65176opto	X	X	-	-	X	X	-	-	X	X	X
SENT	X[3]	X[3]	-	-	-	-	-	-	-	-	-

X supported
O not recommended
(mags/caps have better propagation delays and less current consumption)
- not supported

1 Compact FlexRay Piggybacks only
2 VN1630log not supported
3 VN1530/VN1531/VN1640/VN1640A only

Reference
Please refer to our Vector KnowledgeBase for the latest list:
https://vector.com/kbp/entry/219/.

3.6 Compatibility with XL Interface Family

Transceiver

Suitable transceivers for your network interface can be found in the following table.

	Transceiver	CANcardXL	CANcardXLe	CANboard XL / CANcaseXL
Design		Cab	Cab/Twin	Piggy
CAN High-Speed	251	X	X	X
	251opto	X	X	X
	251mag	X	X	X
	251fibre	X	X	-
	1040mag	X	X	X
	1041opto	X	X	X
	1041Aopto	X	X	X
	1041Amag	X	X	X
	1050	X	X	X
	1050opto	X	X	X
	1050mag	X	X	X
	1051cap	-[2]	-[2]	X
	1057Gcap	-[2]	-[2]	X
	1462BT	-	-	-
CAN Low-Speed	1054	X	X	X
	1054opto	X	X	X
	1054mag	X	X	X
	1055cap	-[2]	-[2]	X
Single Wire CAN	5790c	X	X	X
	5790opto c	X	X	X
	7356cap	-[2]	-[2]	X
Truck & Trailer CAN	10011opto	X	X	X
LIN	6258opto	X	X	X
	6259opto	X	X	X
	6259mag	X	X	X
	7259mag	X	X	X
	7259	-	-	-
	7269mag	X	X	X
FlexRay	1080	-	-	-
	1080mag	-	-	-
	1080Amag	-	-	-
	1082cap	-	-	-

Design

Miscellaneous

Transceiver	CANcardXL	CANcardXLe	CANboard XL / CANcaseXL
	Cab	Cab/ Twin	Piggy
8444opto	X	X	-
8642	-	-	-
J1708 65176opto	X	X	X

Cab	Cab (see section Cabs on page 50)
Twin	TWINcab (see section TWINcabs on page 53)
Piggy	Piggyback (see section Piggybacks on page 44)

X	supported
O	not recommended (mags/caps have better propagation delays and less current consumption)
-	not supported

1	Compact FlexRay Piggybacks only
2	Piggyback only
3	supported with a future driver update



Reference
Please refer to our Vector KnowledgeBase for the latest list:
https://vector.com/kbp/entry/219/.

4 Transceiver - Technical Data

In this chapter you find the following information:

4.1 D-SUB Pin Assignment 61

4.2 CAN High-Speed 63
4.2.1 General Information 63
4.2.2 251 63
4.2.3 251opto 64
4.2.4 251mag 64
4.2.5 251fibre 65
4.2.6 1040mag 66
4.2.7 1041Aopto 67
4.2.8 1041Amag 69
4.2.9 1050 69
4.2.10 1050opto 69
4.2.11 1050mag 70
4.2.12 1051cap 70
4.2.13 1057Gcap 70
4.2.14 1462BT 71

4.3 CAN Low-Speed (fault tolerant) 72
4.3.1 General Information 72
4.3.2 1054 73
4.3.3 1054opto 74
4.3.4 1054mag 75
4.3.5 1055cap 76

4.4 LIN 77
4.4.1 General Information 77
4.4.2 7259 78
4.4.3 7269mag 79

4.5 Single Wire CAN 80
4.5.1 General Information 80
4.5.2 5790c 80
4.5.3 5790opto c 83
4.5.4 7356cap 83

4.6 J1708 84
4.6.1 General Information 84
4.6.2 65176opto 84

4.7 Truck & Trailer CAN 85
4.7.1 General Information 85
4.7.2 10011opto 86

4.8 Special Design **87**
4.8.1 CANcab EVA 87
4.9 FlexRay **88**
4.9.1 General Information 88
4.9.2 1080Amag 88
4.9.3 1082cap 89
4.10 Sensors **90**
4.10.1 SENT (Single Edge Nibble Transmission) 90

4.1 D-SUB Pin Assignment

Primary pin assignment

The following table shows the pin assignment of the network interface's D-SUB connector, when a Cab/Piggyback is used individually or, if the D-SUB has a double pin assignment, used as the primary channel.

Furthermore, the table applies to network interfaces with D-SUB15 connectors if the corresponding adapter cable is used, e. g. VNcable 3Y.

		Pin 1	Pin 2	Pin 3	Pin 4	Pin 5	Pin 6	Pin 7	Pin 8	Pin 9
CAN High-Speed	251	-	CAN L	GND	-	Shield	-	CAN H	-	-
	251opto	-	CAN L	VB-	-	Shield	-	CAN H	-	-
	251mag	-	CAN L	VB-	-	Shield	-	CAN H	-	-
	251fibre	-	CAN L	VB-	-	Shield	-	CAN H	-	VB+
	1040mag	-	CAN L	VB-	Split	Shield	-	CAN H	-	-
	1041Aopto	-	CAN L	VB-	Split	Shield	-	CAN H	-	(VB+)
	1041Amag	-	CAN L	VB-	Split	Shield	-	CAN H	-	(VB+)
	1050	-	CAN L	GND	-	Shield	-	CAN H	-	-
	1050opto	-	CAN L	VB-	-	Shield	-	CAN H	-	-
	1050mag	-	CAN L	VB-	-	Shield	-	CAN H	-	-
	1051cap	-	CAN L	VB-	-	Shield	-	CAN H	-	-
	1057Gcap	-	CAN L	VB-	-	Shield	-	CAN H	-	-
	1462BT	-	CAN L	VB-	-	Shield	-	CAN H	-	-
CAN Low-Speed	1054	-	CAN L	GND	-	Shield	-	CAN H	-	(VBatt)
	1054opto	-	CAN L	VB-	-/RT1	Shield	-	CAN H	-/RT2	(VB+)
	1054mag	-	CAN L	VB-	-/RT1	Shield	-	CAN H	-/RT2	(VB+)
	1055cap	-	CAN L	VB-	RT1	Shield	-	CAN H	-	(VB+)
Single Wire CAN	5790c	-	-	GND	R100	Shield	-	CAN	-	VBatt
	5790opto c	-	-	VB-	R100	Shield	-	CAN	-	VB+
	7356cap	-	-	VB-	R100	Shield	-	CAN	-	VB+
Truck & Trailer CAN	10011opto	-	CAN L	VB-	-	Shield	-	CAN H	-	Vs
LIN	7259	-	Pdis	VB-	-	Shield	-	LIN	-	(VB+)
	7269mag[1)]	-	-	VB-	Pdis	Shield	-	LIN	-	(VB+)
	7269mag[2)]	-	Pdis	VB-	-	Shield	-	LIN	-	(VB+)
FlexRay	1080Amag	-	BM A	VB-	BM B	Shield	-	BP A	BP B	-
	1082cap	Trig	BM A	VB-	BM B	Shield	-	BP A	BP B	-
J1708	65176opto	-	A	VB-	-	Shield	-	B	-	-
IO	8444opto	see section IOcab 8444opto on page 92								
	8642	see section IOpiggy 8642 on page 108								
Sensors	SENT	-	-	GND	-	-	-	SENT	-	VB+

1) all supporting Vector Network Interfaces except for VN1530/VN1531 and VN1670.
2) VN1530/VN1531 and VN1670 only.

Details

Pin	Description
-	Reserved, e. g. for the secondary pin assignment of built-in transceivers in a network interface (e. g. VN1630 CH1/CH3, CH2/4).
CAN H	CAN High.
CAN L	CAN Low.
GND	Ground.
VB-	Electrically decoupled ground.
VB+	Positive supply voltage for electrically decoupled Cabs/Piggybacks. For voltage range see technical data of the according transceiver.
(VB+)	VB+ optional.
Vs	Positive supply voltage for Truck & Trailer CAN.
Shield	Shield.
VBatt	Positive supply voltage for Cabs/Piggybacks without galvanic isolation. For voltage range see technical data of the according transceiver.
(VBatt)	VBatt optional.
R100	If a single-wire CANcab/CANpiggy is operated in a high-speed network, a terminating resistor must be placed in the network between CAN High and GND/VB-. In high-speed mode, the CANcab/CANpiggy connects such a resistor (100 Ohm) in the circuit when a shunt is placed between pin 7 (CAN High) and pin 4 (R100).
Pdis	Power disable. If Pdis is connected to VB-, the internal power supply is disabled. In this case an external power supply is required at VB+.
RT1	**Only CANcab 1054mag, CANpiggy 1055cap:** If this pin is connected to pin 3 (VB-), the internal terminating resistor is reduced to 500 Ohm. Note: Also valid for CANpiggy 1054mag when used with VN8970 or VN1600 interface family.
RT2	**Only CANpiggy 1054mag:** If this pin is connected to pin 3 (VB-), the internal terminating resistor is reduced to 500 Ohm. Note: Not valid for VN8970 or VN1600 interface family. See RT1.
Trig	Trigger (see user's manual for further details).
BP	Bus plus.
BM	Bus minus.

4.2 CAN High-Speed

4.2.1 General Information

Properties

High-speed Cabs and Piggybacks are fully compatible to the ISO 11898-2 standard and may be implemented for transmission rates up to 2 Mbit/s for CAN 2.0 and up to 8 Mbit/s for CAN FD (depends on the network).

Bus level

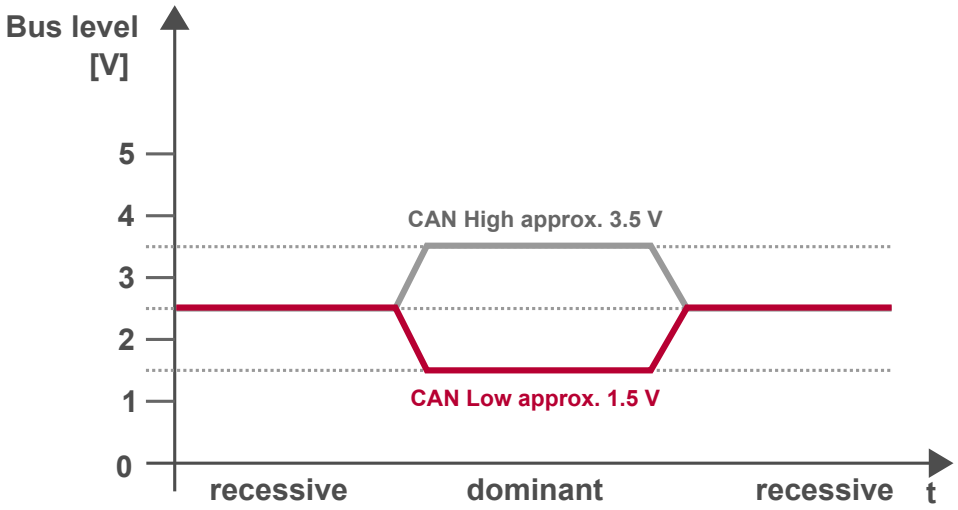

Test setup

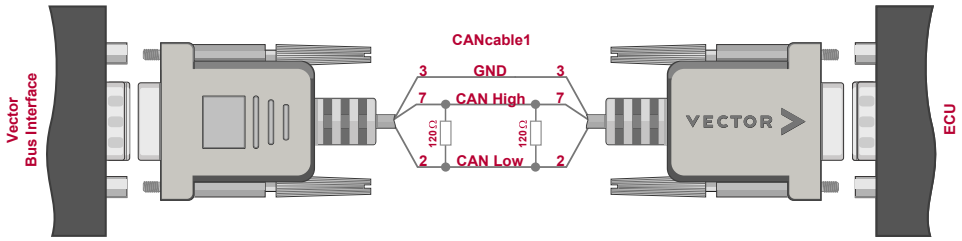

Figure 8: Connection between network interface and ECU e. g. via CANcable1

4.2.2 251

Technical data

Voltage supply	By Vector network interface
Current consumption	Approx. 30 mA (typ.)
Transceiver	PCA82C251
Maximum baudrate	1 Mbit/s (if necessary 2 Mbit/s in peer-2-peer connections)

4.2.3 251opto

Technical data

Voltage supply	By Vector network interface
Current consumption	Approx. 60 mA (typ.)
Transceiver	PCA82C251
Maximum baudrate	1 Mbit/s
Isolation	Optical: HCPL-0720-500 or compatible
Insulation voltage	Defined by network interface

Electrical isolation

With this transceiver, the network interface is electrically isolated from the CAN bus. The transceivers' voltage supply is electrically isolated via a DC/DC converter.

4.2.4 251mag

Technical data

Voltage supply	By Vector network interface
Current consumption	Approx. 60 mA (typ.)
Transceiver	PCA82C251
Maximum baudrate	1 Mbit/s (if necessary 2 Mbit/s in peer-2-peer connections)
Isolation	Magnetically: ADuM 1100
Insulation voltage	Defined by network interface

Electrical isolation

With this transceiver, the network interface is electrically isolated from the CAN bus. The transceivers' voltage supply is electrically isolated via a DC/DC converter.

4.2.5 251fibre

Note
The 251fibre is only available as Cab.

Technical data

Voltage supply	PC side: by Vector network interface Bus side: external supply 6 V…36 V DC
Current consumption	PC side: 50 mA at 250 kBit/s Bus side: 50 mA (typ.)
Transceiver	PCA82C251 or compatible
Maximum baudrate	500 kbit/s
Optocoupler	HCPL-0720-500 or compatible (typ. delay time approx. 30 ns)
Fiber optic connector	HP type HFBR 0508
Fiber optic coupler	HP HFBR1528/HFBR2528
Total delay time	360 ns (typ.) + 2 x 5 ns/m fiber LWL
Dimensions	76 mm x 30 mm x 22 mm (approx. 3 x 1.2 x 0.9 in)
Weight	150 g
Housing	Black anodized aluminum
Maximal length	25 m (1 mm POF), at 500 kbit/s (85% sampling point) 50 m (200 µm HCS), at 250 kbit/s (85% sampling point)

Hardware

The CANcab 251fibre consists of two separate components, which are interconnected by a two-conductor fiber-optic cable. One component is connected to the CANcardXL via the I/O connector, and the other component is connected to the CAN bus via a D-SUB9 connector. The CANcab 251fibre is connected via an HFBR-0508 (optical couplers: HP modules HFBR-1528/HFBR-2528).

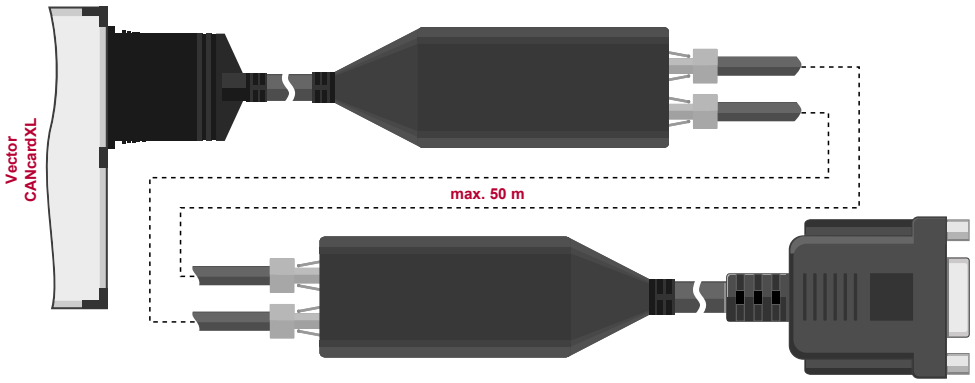

Figure 9: Connecting CANcab 251fibre to CANcardXL

Reference
Please find suitable fiber cables for CANcab 251 fibre on page 159.

Bus-side voltage supply

The CANcab 251fibre has to be externally supplied via pin 9.

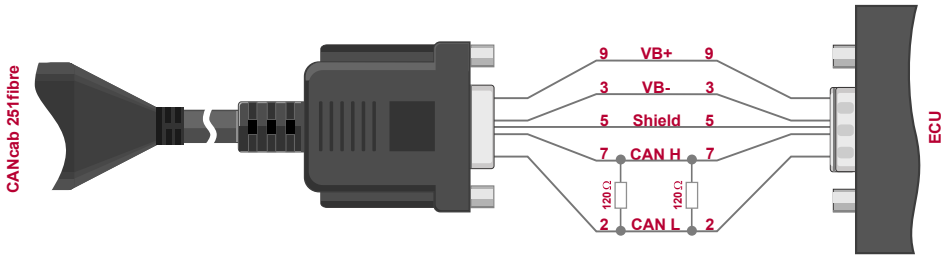

Figure 10: Connecting CANcab 251fibre to ECU

4.2.6 1040mag

Technical data

Voltage supply	By Vector network interface
Transceiver	TJA1040
Maximum baudrate	1 Mbit/s
Minimal baudrate	40 kbit/s
Isolation	Magnetically: ADuM 1100
Insulation voltage	Defined by network interface
Further properties	No unwanted error frames are generated (e. g. during shutdown)

Electrical isolation

With this transceiver, the network interface is electrically isolated from the CAN bus. The transceivers' voltage supply is electrically isolated via a DC/DC converter.

4.2.7 1041Aopto

Technical data

Voltage supply	By Vector network interface or external 12 V…18 V DC
Transceiver	TJA1041A
Maximum baudrate	1 Mbit/s
Minimal baudrate	40 kbit/s
Isolation	Optical: HCPL-0720-500 or compatible (typ. delay time approx. 30 ns)
Insulation voltage	Defined by network interface

Electrical isolation

With this transceiver, the network interface is electrically isolated from the CAN bus. The transceivers' voltage supply is electrically isolated via a DC/DC converter.

External voltage supply

An external voltage supply is possible via pin 9 at the D-SUB9 connector. The under voltage error detection of the transceiver is not possible in this case. This applies to both V_{Batt} and V_{CC}.

Split termination

The concept of the split termination is depicted in the figure below. In normal mode, this terminates the common mode signals via a capacitor to ground at the center tap point of the two 60 Ohm resistors. This is an attempt to achieve a kind of stabilization of the recessive bus voltage of approx. 2.5 V. In all other modes, pin 4 is high impedance, and therefore the split termination is deactivated. The recommended capacitance value of capacitor C_{Split} is 4.7 nF.

The series resistance in the split line that is recommended for some applications is not needed here, since a lost ground may be caused only by a defect in the CANcab/CANpiggy.

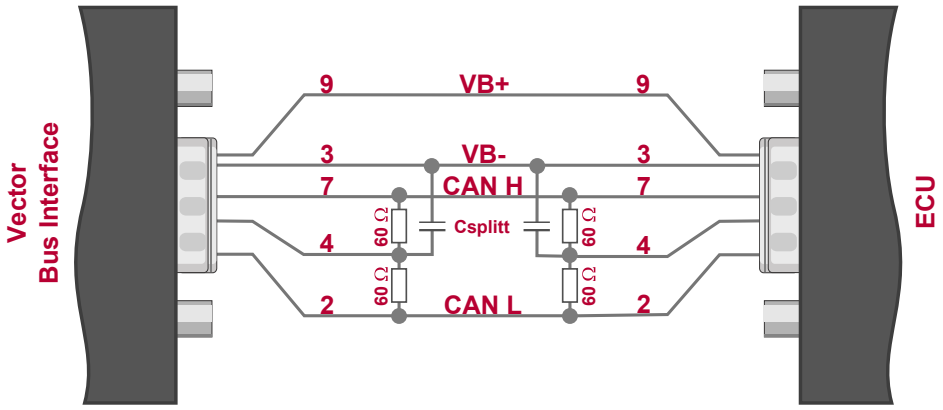

Figure 11: Setup example with external voltage supply and split termination

Programming of the normal and sleep Mode

The CANcab/CANpiggy 1041Aopto/mag supports both normal mode and sleep mode.

Switching between these modes is either done with the **xlCANSetChannelTransceiver** function of the XL Driver Library or with the CAPL function **setCanCabsMode**. Regarding this function it should be noted that the channel number is the logical channel number used by CANalyzer or CANoe according to the allocation in the Vector Hardware Configuration.

The **setCanCabsMode** function has four parameters: ntype, nchannel, nmode and

nflags each of type long. For high-speed CANcabs/CANpiggies the following values are valid:

setCanCabsMode

ntype	Meaning
0	Reserved and must be set to 0

nchannel	Meaning
0…n	CAN channel to be set

nmode	Meaning
0	NORMAL
1	SLEEP

nflags	Meaning
1	AUTOWAKEUP, only together with SLEEP



Example

The following example shows how to switch the CANcab/CANpiggy 1041Aop-to/mag to standby mode with CANalyzer/CANoe and a CAPL program.

```
variables
{
}

on key '1'
{
   write ("CAN1 High-Speed: Normal Mode");
   setCanCabsMode(0, 1, 0, 0);
}

on key '2'
{
   write ("CAN1 High-Speed: Sleep Mode");
   setCanCabsMode(0, 1, 1, 1);
}

on key '3'
{
   write ("CAN2 High-Speed: Normal Mode");
   setCanCabsMode(0, 2, 0, 0);
}

on key '4'
{
   write ("CAN2 High-Speed: Sleep Mode");
   setCanCabsMode(0, 2, 1, 1);
}
```

4.2.8 1041Amag

Technical data

Voltage supply	By Vector network interface or external 12 V…18 V DC
Transceiver	TJA1041A
Maximum baudrate	1 Mbit/s
Minimal baudrate	40 kbit/s
Isolation	Magnetically: ADuM 1100
Insulation voltage	Defined by network interface
Further properties	No unwanted error frames are generated (e. g. during shutdown)

Electrical isolation

With this transceiver, the network interface is electrically isolated from the CAN bus. The transceivers' voltage supply is electrically isolated via a DC/DC converter.



Reference
Programming of the normal/sleep mode see section 1041Aopto on page 67.

4.2.9 1050

Technical data

Voltage supply	By Vector network interface
Current consumption	Approx. 30 mA (typ.)
Transceiver	TJA1050
Maximum baudrate	1 Mbit/s

4.2.10 1050opto

Technical data

Voltage supply	By Vector network interface
Current consumption	Approx. 60 mA (typ.)
Transceiver	TJA1050
Maximum baudrate	1 Mbit/s
Isolation	Optical: HCPL-0720-500 or compatible
Insulation voltage	Defined by network interface

Electrical isolation

With this transceiver, the network interface is electrically isolated from the CAN bus. The transceivers' voltage supply is electrically isolated via a DC/DC converter.

4.2.11 1050mag

Technical data

Voltage supply	By Vector network interface
Current consumption	Approx. 60 mA (typ.)
Transceiver	TJA1050
Maximum baudrate	1 Mbit/s
Isolation	Magnetically: ADuM 1100
Insulation voltage	Defined by network interface
Further properties	No unwanted error frames are generated (e.g. during shutdown)

Electrical isolation

With this transceiver, the network interface is electrically isolated from the CAN bus. The transceivers' voltage supply is electrically isolated via a DC/DC converter.

4.2.12 1051cap



Note
This transceiver is available as Piggyback only.

Technical data

Voltage supply	By Vector network interface
Current consumption	Approx. 60 mA (typ.)
Transceiver	TJA1051
Maximum baudrate	CAN High-Speed: 1 Mbit/s (if necessary 2 Mbit/s in peer-2-Peer connections) CAN FD: 5 Mbit/s (if necessary 8 Mbit/s depending on bus physics)
Further properties	No unwanted error frames are generated (e.g. during shutdown)

Electrical isolation

With this transceiver, the network interface is electrically isolated from the CAN bus. The transceivers' voltage supply is electrically isolated via a DC/DC converter.

4.2.13 1057Gcap



Note
This transceiver is available as Piggyback only.

Technical data

Voltage supply	By Vector network interface
Transceiver	TJA1057G
Maximum baudrate	CAN High-Speed: 1 Mbit/s (if necessary 2 Mbit/s in peer-2-Peer connections) CAN FD: 5 Mbit/s (if necessary 8 Mbit/s depending on bus physics)
Further properties	No unwanted error frames are generated (e.g. during shutdown)

Electrical

With this transceiver, the network interface is electrically isolated from the CAN bus.

isolation

The transceivers' voltage supply is electrically isolated via a DC/DC converter.

4.2.14 1462BT



Note
This transceiver is available as Piggyback only.

This Piggyback uses a CAN SIC transceiver (Signal Improvement Capability) which reduces signal ringing in a network. It allows reliable CAN FD communication to function in larger topologies and features a much tighter bit timing symmetry performance.

Technical data

Voltage supply	By Vector network interface
Transceiver	TJA1462BT
Maximum baudrate	CAN High-Speed: 1 Mbit/s CAN FD (many nodes and longer stubs): > 5 Mbit/s CAN SIC (CAN FD, peer-to-peer): > 8 Mbit/s
Further properties	- No unwanted error frames are generated (e.g. during shutdown) - Fully compatible to CiA 601-4 v2.0.0 (CAN SIC) - Fully compatible to ISO 11898-2 and SAE J2284-1 to J2284-5 - Can be used in legacy networks as well

Electrical isolation

With this transceiver, the network interface is electrically isolated from the CAN bus. The transceivers' voltage supply is electrically isolated via a DC/DC converter.

4.3 CAN Low-Speed (fault tolerant)

4.3.1 General Information

Properties

The low-speed CANcabs/CANpiggies are fully compatible to the ISO 11898-3 standard and can be implemented for transmission rates of up to 125 kbit/s.

Bus level in normal mode

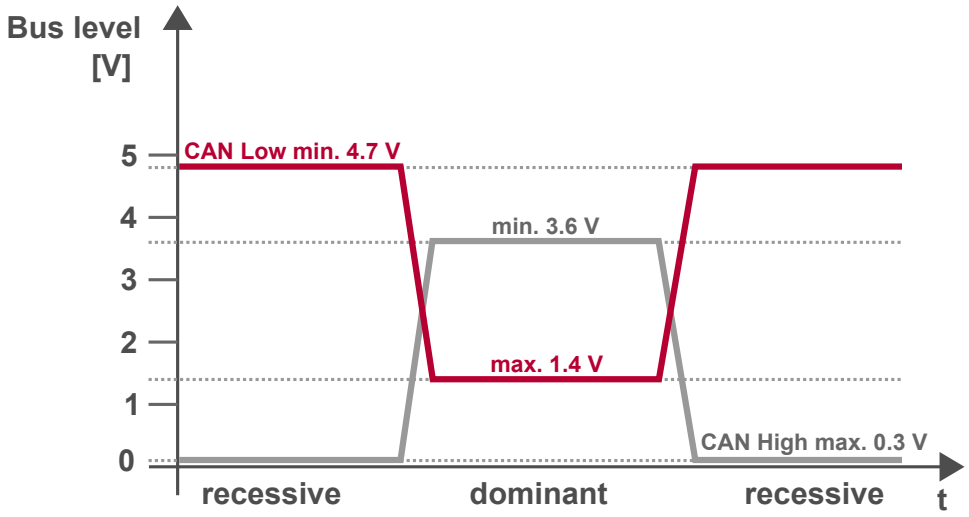

Bus level in standby / sleep mode

- **CAN Low**
  Approx. voltage supply
- **CAN High**
  Approx. 0 V

Note

The voltage value of CAN Low depends on many factors and may fluctuate significantly in practice.

If all bus nodes are in sleep mode, the transceivers connect CAN Low to V_{Batt} via the terminating resistance RTL. Since the transceivers have different supply voltages, this results in cross currents between the CAN nodes via the terminating resistors. In sleep mode, this can lead to false readings when measuring supply currents.

Test setup

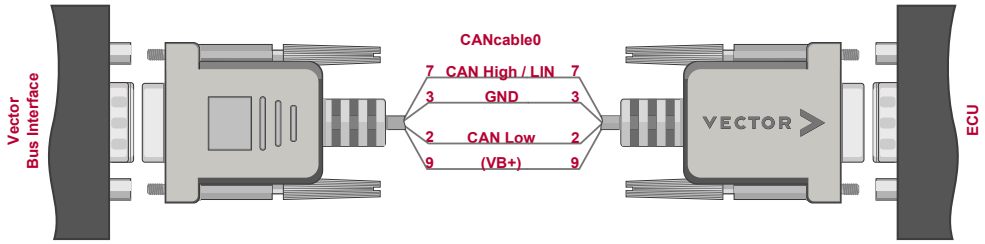

Figure 12: Connection between network interface and ECU e. g. via CANcable0

4.3.2 1054

Technical data

Voltage supply	By Vector network interface or external 12 V…18 V DC
Current consumption	Approx. 20 mA (typ.)
Transceiver	TJA1054
Maximum baudrate	125 kbit/s
Minimal baudrate	40 kbit/s

Programming of normal/sleep modes

The 1054 (mag/opto) supports both normal mode and sleep mode.

It is possible to toggle between the modes either with the **xlCANSetChannelTransceiver** function of the XL Driver Library or with the CAPL function **setCanCabsMode**. Regarding this function, it should be noted that the channel number is the logical channel number used by CANalyzer or CANoe according to the allocation in the Vector Hardware Configuration.

The **setCanCabsMode** function has four parameters: ntype, nchannel, nmode and nflags each of type long. For low-speed CANcabs/CANpiggies the following values are valid:

setCanCabsMode

ntype	Meaning
0	Reserved and must be set to 0

nchannel	Meaning
0…n	CAN channel to be set

nmode	Meaning
0	NORMAL
1	SLEEP

nflags	Meaning
1	AUTOWAKEUP, only with SLEEP

Example
The following example shows how to switch the CANcab/CANpiggy 1054(mag/-opto) to standby mode with CANalyzer/CANoe and a CAPL program.

```
variables
{
}

on key '1'
{
   write ("CAN1 Low-Speed: Normal Mode");
   setCanCabsMode(0, 1, 0, 0);
}

on key '2'
{
   write ("CAN1 Low-Speed: Sleep Mode");
   setCanCabsMode(0, 1, 1, 1);
}

on key '3'
{
   write ("CAN2 Low-Speed: Normal Mode");
   setCanCabsMode(0, 2, 0, 0);
}

on key '4'
{
   write ("CAN2 Low-Speed: Sleep Mode");
   setCanCabsMode(0, 2, 1, 1);
}
```

4.3.3 1054opto

Technical data

Voltage supply	By Vector network interface or external 12 V…18 V DC
Current consumption	Approx. 60 mA (typ.)
Transceiver	TJA1054
Maximum baudrate	125 kbit/s
Minimal baudrate	40 kbit/s
Isolation	Optical: HCPL-0720-500 or compatible
Insulation voltage	Defined by network interface
Further properties	Switchable terminating resistor (see section 1054mag on page 75)

Electrical isolation

With this transceiver, the network interface is electrically isolated from the CAN bus. The transceivers' voltage supply is electrically isolated via a DC/DC converter.

External voltage supply

The bus-side voltage can be supplied by an external voltage source. This is especially recommended if current measurements are performed on the ECU while the CAN bus is in sleep mode.

Reference
Programming of the normal/sleep mode see section 1054 on page 73.

4.3.4 1054mag

Technical data

Voltage supply	By Vector network interface or external 12 V…18 V DC
Current consumption	Approx. 60 mA (typ.)
Transceiver	TJA1054
Maximal baudrate	125 kbit/s
Minimal baudrate	40 kbit/s
Isolation	Magnetically: ADuM 1100
Insulation voltage	Defined by network interface
Further properties	No unwanted error frames are generated (e.g. during shutdown). Switchable terminating resistor.

Electrical isolation

With this transceiver, the network interface is electrically isolated from the CAN bus. The transceivers' voltage supply is electrically isolated via a DC/DC converter.

External voltage supply

The bus-side voltage can be supplied by an external voltage source. This is especially recommended if current measurements are performed on the ECU while the CAN bus is in sleep mode.

Switchable terminating resistors

The 1054opto/mag has an internal switchable terminating resistor. Via parallel connection, the terminating resistor is reduced from 4.7 kOhm to 500 Ohm. This is useful in applications where only a few ECUs exist in the network.

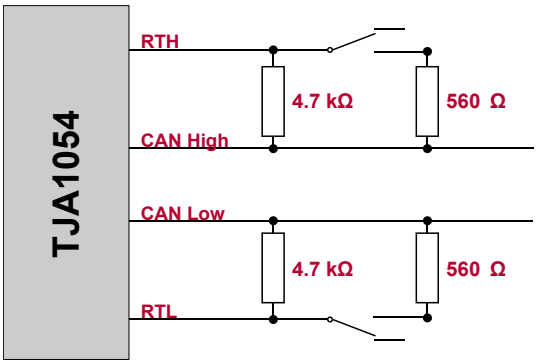

Figure 13: Switching terminating resistors

To enable the terminating resistor, pin 4 or pin 8 of the D-SUB9 connector has to be connected to ground (see details on RT1/RT2 on page 61). If pin 4 or pin 8 is not connected to ground, the value of the terminating resistor is 4.7 kOhm.

Reference
Programming of the normal/sleep mode see section 1054 on page 73.

4.3.5 1055cap

Note
This transceiver is available as Piggyback only.

Technical data

Voltage supply	By Vector network interface or external 12 V…18 V DC
Transceiver	TJA1055
Maximal baudrate	125 kbit/s
Minimal baudrate	40 kbit/s
Further properties	No unwanted error frames are generated (e.g. during shutdown). Switchable terminating resistor

Electrical isolation

With this transceiver, the network interface is electrically isolated from the CAN bus. The transceivers' voltage supply is electrically isolated via a DC/DC converter.

External voltage supply

The bus-side voltage can be supplied by an external voltage source. This is especially recommended if current measurements are performed on the ECU while the CAN bus is in sleep mode.

Switchable terminating resistors

The 1055cap has an internal switchable terminating resistor.
Via parallel connection, the terminating resistor is reduced from 4.7 kOhm to 500 Ohm. This is useful in applications where only a few ECUs exist in the network.

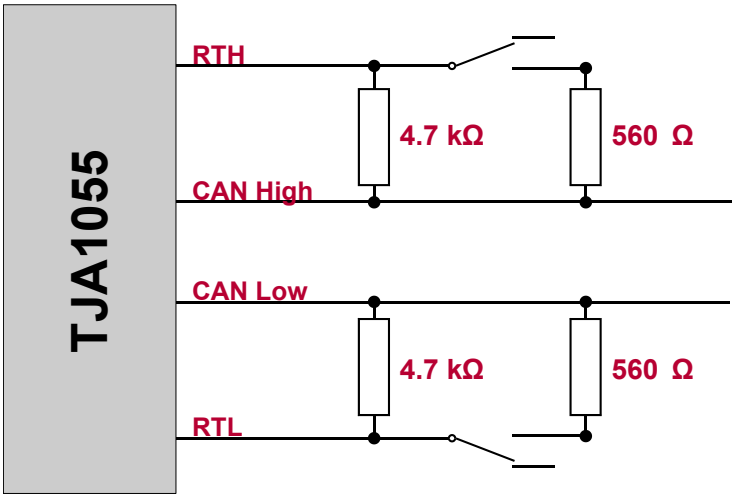

Figure 14: Switching terminating resistors

To enable the terminating resistor, pin 4 of the D-SUB9 connector has to be connected to ground (see details on RT1 on page 55). If pin 4 is not connected to ground, the value of the terminating resistor is 4.7 kOhm.

Reference
Programming of the normal/sleep mode see section 1054 on page 73.

4.4 LIN

4.4.1 General Information

Properties

The LINcab/LINpiggy conforms to the LIN standard (Local Interconnect Network) and is specified for transmission rates of up to 20 kbit/s in normal mode as well as 115 kbit/s in flash mode.

The LIN bus communicates over a single-wire bus and is based on a master-slave concept. Consequently, no arbitration or collision management is needed in the slave nodes.

LIN communication principle:

- The LIN master generates the message header and places it on the bus. The message header consists of the sync break, sync field and ID field.
- The addressed LIN slave node places its message response on the bus after the message header. The message response is composed of 0...7 data bytes and a checksum field.
- The individual bytes of a message are transmitted according to the conventional UART protocol (1 start bit, 8 data bits, and 1 stop bit).

Bus level

The following figure depicts the voltage levels on the LIN bus. V_{Batt} is the supply voltage of the ECU that is LIN master. The bus voltage can be changed to the recessive case (V_{Sup}) by means of filter elements and dynamic voltage changes in the supply voltage of the master ECU.

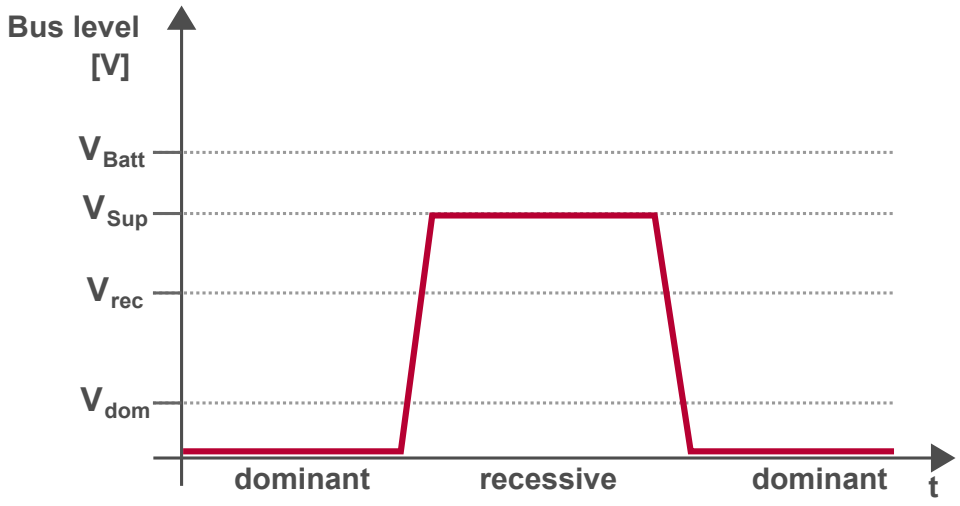

Bus-side voltage supply

Since the recessive level on the bus depends on the supply voltage of the master, it is advisable to operate the LINcab/LINpiggy with an external supply voltage that is also used by the other bus nodes. This prevents cross currents between the individual nodes on the LIN bus.

Connecting **Pdis** with **VB-** of the D-SUB of the network interface disables the internal voltage supply of the LINcab/LINpiggy. This makes it possible to perform measurements on the LIN bus, even with an external supply below 12 V.

Note
If an external master resistor and an external voltage supply are being used at the D-SUB9 connector of the LINcab/LINpiggy, a diode should be connected in series (see figure below). Otherwise the LINcab/LINpiggy would be supplied by the LIN bus over the external master resistor, if the external voltage supply was broken. This diode is necessary according to the LIN specification.

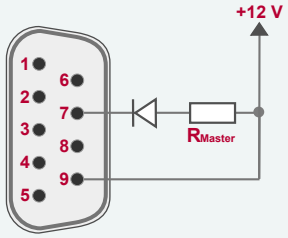

4.4.2 7259

Technical data

Voltage supply	By Vector Network Interface: 12 V External: ca. 8 V ... 36 V (Pdis used)
Transceiver	TLE7259-3GE
Maximal baudrate	Normal mode: 20 kbit/s Flash mode: 115 kbit/s* *Depending on the bus physics, the maximum data rate can be much higher, see notes in the network interface manuals.
Electr. Isolation	Yes
Insulation voltage	Defined by network interface
Bus termination	Master mode: 1 kOhm Slave mode: 30 kOhm

Electrical isolation

With this transceiver, the network interface is electrically isolated from the LIN bus. The transceivers' voltage supply is electrically isolated via a DC/DC converter.

Properties

The 7259 transceiver is designed for 24 V applications. In addition, it has a time out counter, which avoids a constant dominant level on the LIN bus in error cases. The minimum switch off time of the transceiver is 6 ms.

Stress functionality

The stress functionality of the LINpiggy enables you to disturb the LIN bus by dominant or recessive disturbing bits. The duration of disturbing bits is not limited.

Note
Recessive disturbing sequences have a current limitation of 520 mA, dominant disturbing bits are protected by a 100 mA fuse.

In both disturbing modes, the LINpiggy 7259 has a protection against electrical and thermal overloads. The LINpiggy must be supplied externally to use the recessive disturbing mode.

Minimal baudrate

Due to the dominant timeout (8…20 ms) of the TLE7259-3GE, it may not be possible to transmit a LIN header at very low baudrates. Therefore intended dominant sequences longer than 6 ms are created using the LINpiggy's integrated transistor circuitry.

Flash mode

The flash mode enables higher data transmission rates which can be used for pro-

gramming microcontrollers during the ECU production. This is possible by an increased slew rate of the transceiver, which may also affect EMC properties.

4.4.3 7269mag

Technical data

Voltage supply	By Vector network interface or external 12 V…36 V DC
Current consumption	30 mA (typ.)
Transceiver	TLE7269
Maximal baudrate	Normal mode: 20 kbit/s Flash mode: 115 kbit/s* *Depending on the bus physics, the maximum data rate can be much higher, see notes in the network interface manuals.
Isolation	Magnetically: ADuM 1100
Insulation voltage	Defined by network interface
Bus termination	Master mode: 1 kOhm Slave mode: 30 kOhm

Electrical isolation

With this transceiver, the network interface is electrically isolated from the LIN bus. The transceivers' voltage supply is electrically isolated via a DC/DC converter.

Properties

The 7269mag transceiver is designed for 24 V applications. In addition, it has a time out counter, which avoids a constant dominant level on the LIN bus in error cases. The minimum switch off time of the transceiver is 6 ms.

Stress functionality

The stress functionality of the LINcab/TWINcab and LINpiggy enables you to disturb the LIN bus by dominant or recessive disturbing bits. The duration of disturbing bits is not limited.



Note

Recessive disturbing sequences are protected by a 500 mA fuse, dominant disturbing bits are protected by a 100 mA fuse.

In case of dominant disturbing bits, the LINpiggy 7269 has a protection against electrical and thermal overloads. The LINpiggy must be supplied externally to use the recessive disturbing mode.

Minimal baudrate

Due to the dominant timeout (6…20 ms) of the TLE7269, it may not be possible to transmit a LIN header at very low baudrates. Therefore intended dominant sequences longer than 6 ms are created using the LINcab's/LINpiggy's integrated transistor circuitry.

Flash mode

The flash mode enables higher data transmission rates which can be used for programming microcontrollers during the ECU production. This is possible by an increased slew rate of the transceiver, which may also affect EMC properties.

4.5 Single Wire CAN

4.5.1 General Information

Bus Levels

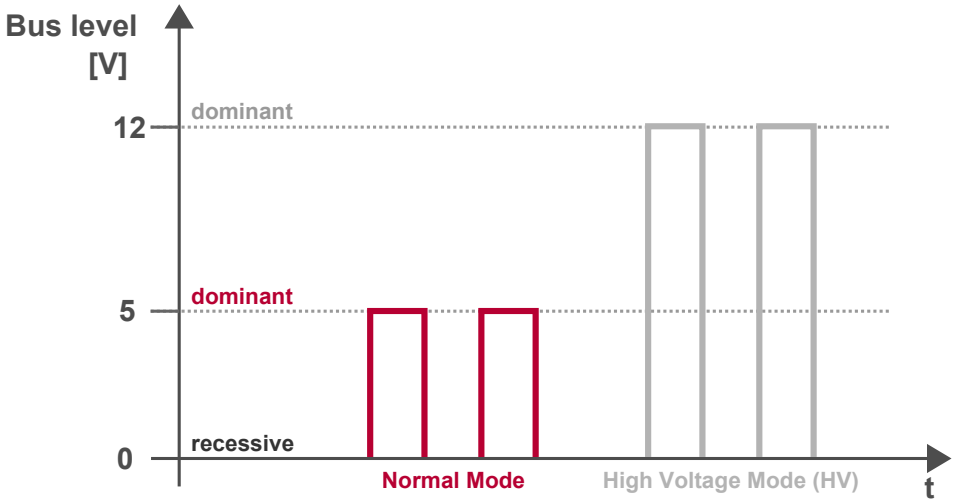

Bus communication

To establish communications between the individual network nodes, VB+ has to be connected to pin 9, GND/VB- to pin 3 and CAN to pin 7 at the D-SUB connector.

If the Single Wire CANcab/CANpiggy is operated in a high-speed network, a terminating resistor must be available between CAN High and GND/VB-. In high-speed mode, such a resistor (100 Ohm) is enabled by the CANcab/CANpiggy if pin 7 (CAN High) is connected to pin 4 (R100).

The resistor is disabled, if the CANcab/CANpiggy switches back to normal mode. To implement higher impedance terminating resistances, another resistor (RR) may also be added instead of a direct connection between CAN High and R100. The total resistance is RR +100 Ohm.

4.5.2 5790c

Technical data

Voltage supply	External 12 V…18 V DC
Transceiver	AU5790
Maximal baudrate	Low-speed: 40 kbit/s High-speed: 100 kbit/s

External voltage supply

The CANcab/CANpiggy has to be operated with an external voltage supply. This voltage is used as the level for the dominant state of the wake-up message.

Programming transceiver modes

The Single Wire CAN transceiver supports normal mode, high-speed mode and sleep mode.

Switching the transceiver modes is either done by the **xlCANSetChannelTransceiver** function of the XL Driver Library or by the CAPL function **setCanCabsMode**. Regarding this function it should be noted that the channel number used by CANalyzer or CANoe is the logical channel number. Furthermore, it is not possible to set the mode explicitly for one channel while preserving the mode of the other channel; modes must always be set for both channels.

The **setCanCabsMode** function has four parameters: ntype, nchannel, nmode and nflags each of type long. For Single Wire CANcabs/CANpiggies the following values are valid:

setCanCabsMode

ntype	Meaning
0	Reserved and must be set to 0

nchannel	Meaning
0…n	CAN channel to be set

nmode	Meaning
0	NORMAL
1	SLEEP
2	HIVOLTAGE
3	HISPEED

nflags	Meaning
1	AUTOWAKEUP, only with SLEEP
2	HIGHPRIO, only CANcab 5790c, 1 = clear send buffer

Transmission rate

For normal data exchange, normal mode is used with a transmission rate of up to 40 kbit/s. The high-speed mode is available for transmission rates up to 100 kbit/s, for example for flash programming. However, in this mode the number of bus nodes is limited. The high-voltage mode is needed to send the high-voltage wakeup message (12 V). The transceiver's transmitter is deactivated in sleep mode. Additionally, there is a high priority flag which clears all send buffers.



Example

Example of a CAPL program for sending a high-voltage wakeup message on CAN channel 1. CAN channel 2 is unused in normal mode.

```
variables
{
    message 0x100 msg;
}

on start
{
    msg.CAN = 1;
    msg.DLC = 0;
}

on key 'w'
{
    // Switch transceiver of channel 1 in high-voltage mode,
    // transceiver of channel 2 in normal mode.
    setCanCabsMode(0, 1, 2, 0);
    setCanCabsMode(0, 2, 0, 0);

    // Send message.
    output(msg);

    // After wake-up message switch transceivers of both channels
    // back to normal mode.
    setCanCabsMode(0, 1, 0, 0);
    setCanCabsMode(0, 2, 0, 0);
}

on message *
{
    output(this);
}
```

4.5.3 5790opto c

Technical data

Voltage supply	External 12 V…18 V DC
Transceiver	AU5790
Maximal baudrate	Low-speed: 40 kbit/s High-speed: 100 kbit/s
Optocoupler	HCPL-0720-500 or compatible (typ. Delay time approx. 30 ns)
Insulation voltage	Defined by network interface

Electrical isolation

With this transceiver, the network interface is electrically isolated from the CAN bus. The transceivers' voltage supply is electrically isolated via a DC/DC converter.

External voltage supply

The CANcab/CANpiggy has to be operated with an external voltage supply. This voltage is used as the level for the dominant state of the wake-up message.

Reference
Programming of the normal/sleep mode see section 5790c on page 80.

4.5.4 7356cap

Note
This transceiver is available as Piggyback only.

Technical data

Voltage supply	External 12 V…18 V DC
Transceiver	NCV7356
Maximum baudrate	Low-speed: 40 kbit/s High-speed: 100 kbit/s
Further properties	No unwanted error frames are generated (e.g. during shutdown)

Electrical isolation

With this transceiver, the network interface is electrically isolated from the CAN bus. The transceivers' voltage supply is electrically isolated via a DC/DC converter.

External voltage supply

The CANcab/CANpiggy has to be operated with an external voltage supply. This voltage is used as the level for the dominant state of the wake-up message.

Reference
Programming of the normal/sleep mode see section 5790c on page 80.

4.6 J1708

4.6.1 General Information

Properties

These transceivers enable access to serial networks according SAE standard J1708 respective J1587 and is used predominantly in commercial vehicles. Typical applications of the J1708 network are diagnostic and process data communication.

4.6.2 65176opto

Technical data

Voltage supply	By Vector network interface
Current consumption	Approx. 200 mA
Transceiver	SN65176B
Maximal baudrate	9.6 kbit/s
Isolation	Optical: HCPL-0720-500 or compatible
Bus termination	yes, 2 x 4.7 kOhm

Electrical isolation

With this transceiver, the network interface is electrically isolated from the CAN bus. The transceivers' voltage supply is electrically isolated via a DC/DC converter.

4.7 Truck & Trailer CAN

4.7.1 General Information

Properties

The Truck & Trailer CANcab/CANpiggy is compatible with the ISO 11992-1 standard and has been developed for CAN low-speed applications in the commercial vehicle area. The maximum transmission speed is 250 kbit/s. The possible single-wire modes for this transceiver are only supported by the XL Driver Library.

Bus level

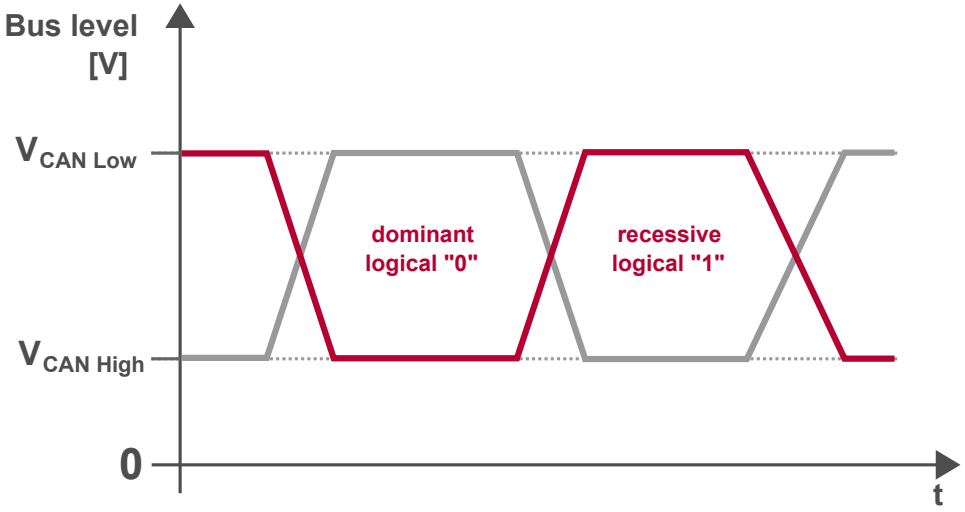

Recessive state

The recessive state is described by the following voltage relation:

V_S: bus side voltage

$V_{CAN_H} = 1/3\ V_S$

$V_{CAN_L} = 2/3\ V_S$

Dominant state

For the dominant levels this relation applies:

$V_{CAN_H} = 2/3\ V_S$

$V_{CAN_L} = 1/3\ V_S$

Differential voltage

This yields the following differential voltage:

$V_{diff} = V_{CAN_L} - V_{CAN_H}$

$V_{diff} = 1/3\ V_S$ recessive state

$V_{diff} = -1/3\ V_S$ dominant state

4.7.2 10011opto

Technical data

Voltage supply	External 16 V…32 V DC
Current consumption	120 mA (typ.)
Transceiver	B10011S
Maximal baudrate	250 kbit/s
Isolation	Optical: HCPL-0720-500 or compatible
Insulation voltage	Defined by network interface

Electrical isolation

With this transceiver, the network interface is electrically isolated from the CAN bus. The transceivers' voltage supply is electrically isolated via a DC/DC converter.

Connection cable

The following connection cables can be used with the 10011opto:

- CANcable TnT (page 121)
- CANcable TnT Term (page 122)

Test setup with CANcable TnT

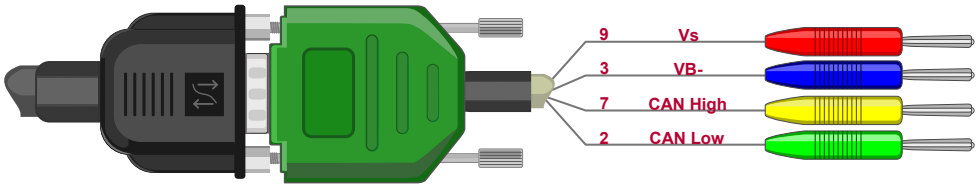

Hardware

The CANcable TnT has a D-SUB9 connector and four bunch plugs to connect to an external voltage supply and the CAN bus.

According to ISO 11992-1, a Truck & Trailer CAN system consists of two nodes, which should be terminated. If the Vector network interface is used together with the CANcab/CANpiggy 10011opto to observe bus traffic between two real ECUs, the CANcable TnT should be used, since both ECUs already have a terminating resistor. If only one real ECU is connected to the CANcab/CANpiggy 10011opto, the CANcable TnT Term should be used.

Bus-side voltage supply

The CANcab/CANpiggy 10011opto has to be operated with an external voltage supply. ISO 11992-1 specifies at least 16 V supply voltage (V_S) for 24 V systems.

4.8 Special Design

4.8.1 CANcab EVA

General

The CANcab EVA is an evaluation kit which can be used to customize the connection setup between the CANcardXL/CANcardXLe and the CAN bus. For this purpose the PCB can be populated with specific bus transceivers.



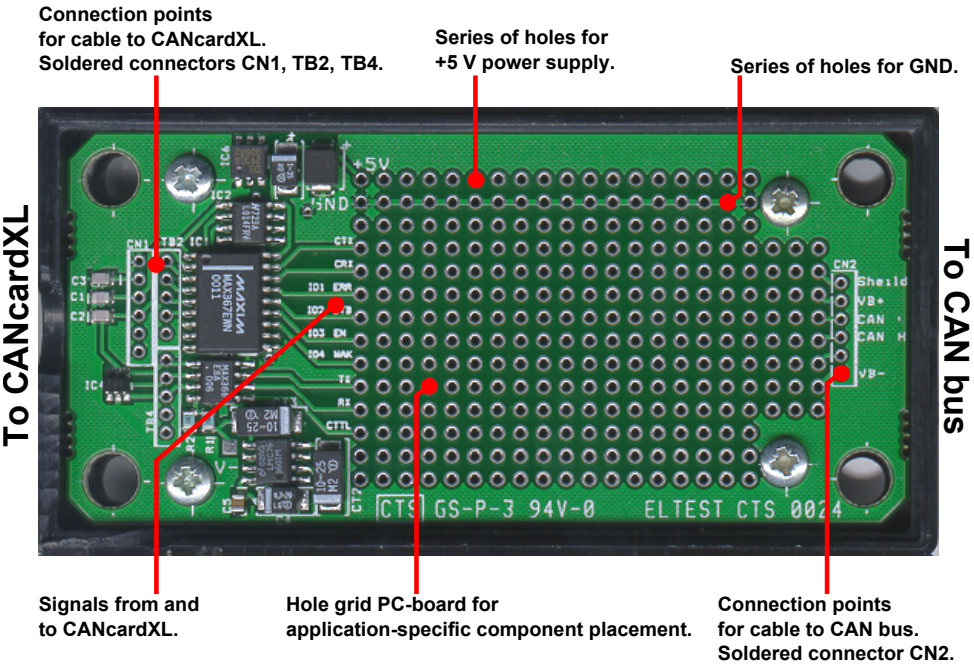

4.9 FlexRay

4.9.1 General Information

Properties

The FlexRay transceivers are compatible to the *FlexRay Communications System Electrical Physical Layer Specification Version 2.1 Rev. A* and can be used with 10 Mbit/s per channel (A/B).

Bus level

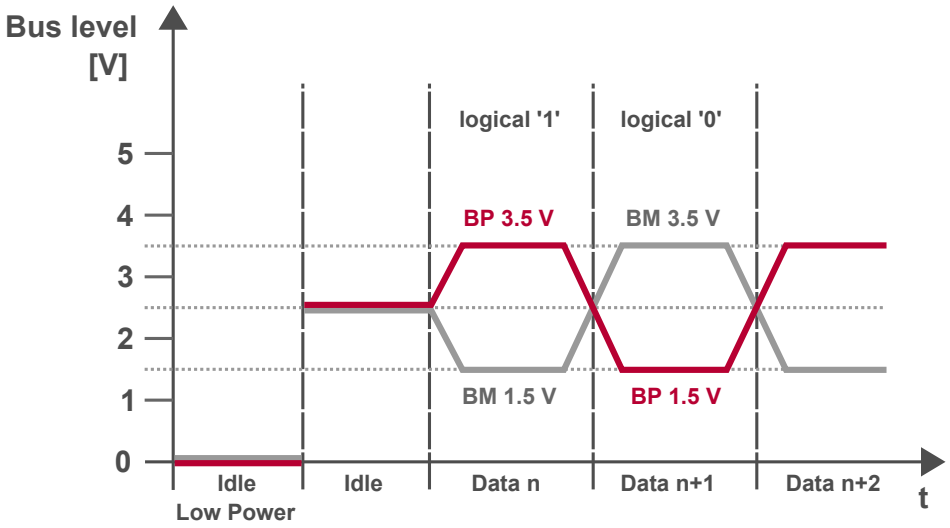

4.9.2 1080Amag

Note
This transceiver is available as Piggyback only.

Technical data

Voltage supply	By Vector network interface
Transceiver	TJA1080A
Baudrate	10 Mbit/s

Electrical isolation

With this transceiver, the network interface is electrically isolated from the FlexRay bus. The transceivers' voltage supply is electrically isolated via a DC/DC converter.

4.9.3 1082cap

Note
This transceiver is available as Piggyback only.

Technical data

Voltage supply	By Vector network interface
Transceiver	TJA1082
Baudrate	10 Mbit/s
Further properties	Trigger

Electrical isolation

With this transceiver, the network interface is electrically isolated from the FlexRay bus. The transceivers' voltage supply is electrically isolated via a DC/DC converter.

Trigger

The FlexRay interface family offers a pin for dedicated trigger applications (see the according pin assignment). The configuration of the trigger and its action is set in the application (e. g. CANoe). The following picture depicts the internal circuit of the trigger pin.

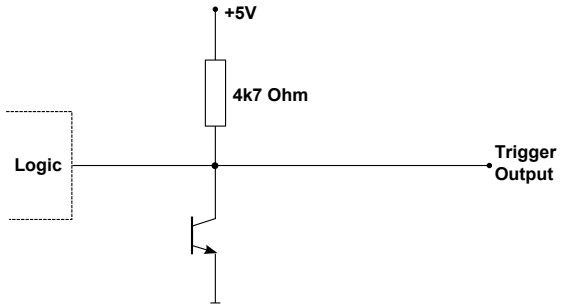

Figure 15: Trigger output

Output

The application's trigger releases a falling edge on the trigger pin. By using external pull up resistors, the maximum allowed load is 5 mA.

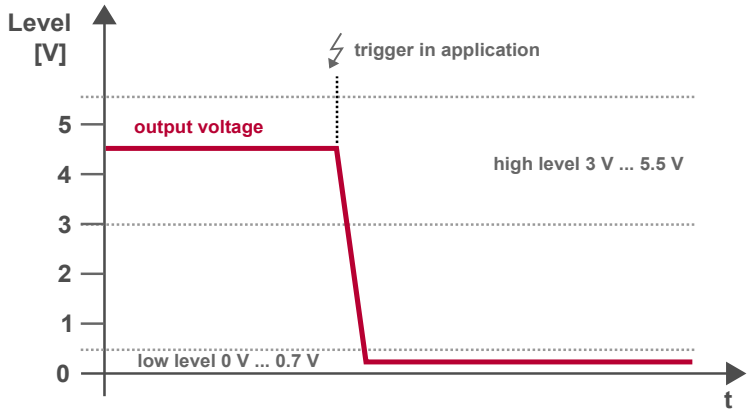

Figure 16: Trigger output

4.10 Sensors

4.10.1 SENT (Single Edge Nibble Transmission)

Properties

The SENSORpiggy SENT is compatible to the SAE J2716 protocol with a maximum data rate of 64.9 kBit /s (at a clock tick period of 3 µs).

Bus level

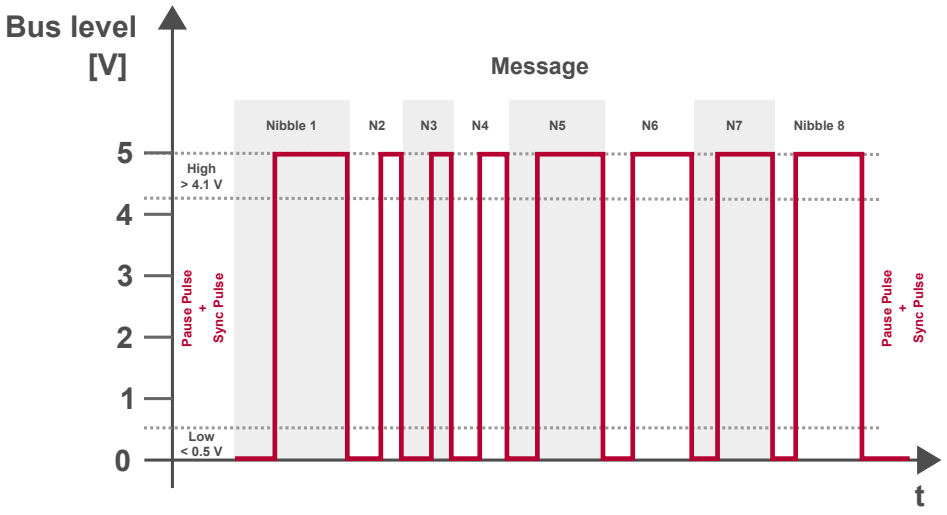

Operating modes

The SENSORpiggy SENT offers three operating modes:

- **ECU simulation (receiving data)**
  In this mode, the SENSORpiggy SENT actively supplies a sensor through V_{supply} and receives its data.

Signals	Description
Sensor voltage supply	5 V (current limited to 50 mA)
Data line	Received data from a connected sensor
GND	Reference potential for data line and sensor supply voltage

- **Sensor simulation (sending data)**
  In this mode, the SENSORpiggy SENT is supplied by an external ECU through V_{supply} or by a vehicle through V_{bat}. The SENSORpiggy SENT transmits generated sensor data to the connected ECU then.

Signals	Description
Input voltage	Data transmission starts as soon as the measured input voltage reaches a trigger level of >=4.6 V. Data transmissions stops when the measured input voltage level is <=4.2 V.
Data line	Transmitted data to a connected ECU
GND	Reference potential for data line and input voltage

- **Trace**
  This mode is a combination of the previous described modes. In trace mode, the SENSORpiggy SENT acts as a spy node between a sensor and an ECU. The bus will not be disturbed in this configuration. The SENSORpiggy SENT receives the messages which are sent from the sensor to the ECU and it also measures the supply voltage of the connected sensor, giving notice if operation level is present or not.

Signals	Description
Input voltage	Measures supply voltage to observe data traffic and proper operation
Data line	Received data from sensor
GND	Reference potential for data line and input voltage

Technical data

Voltage supply	By Vector network interface
Supported modes	ECU simulation, sensor simulation, trace
Sensor voltage supply (ECU simulation)	5 V, limited to 50 mA ± 10 % tolerance
Baudrates	Min: approx. 24.7 kBit/s at clock tick period of 3 µs Max: approx. 64.9 kBit/s at clock tick period of 3 µs
Clock tick period	3 ... 90 µs

Electrical isolation

With this Piggyback, the network interface is electrically isolated from the SENT bus. The Piggybacks voltage supply is electrically isolated via a DC/DC converter.

5 IOcab 8444opto

In this chapter you find the following information:

5.1 Introduction **93**

5.2 Digital Inputs and Outputs **95**

5.2.1 Important Notes on Real Time Capability of Digital Outputs 96

5.3 Analog Inputs and Outputs **98**

5.4 Digital PWM Output / Capture Inputs **100**

5.5 Data Logging **102**

5.6 Firmware Update **103**

5.7 Technical Data **105**

5.1 Introduction

System requirements

The IOcab can be connected to the **CANcardXL** or to the **CANcardXLe** only. Other interface cards are not supported.

The IOcab is supported by:

- CANoe Version 5.0 SP2 or higher
- CANape Version 5.0 SP2 or higher
- XL Driver Library 5.0 or higher

Functional description

The IOcab 8444opto was specifically developed for measurement and control applications in the CAN, LIN and MOST environments. It is used in automotive development applications and in industrial automation and related areas.

The IOcab offers these features:

- 8x digital input
- 4x digital output
- 4x analog input
- 4x analog output
- 1x analog comparator
- 1x PWM (pulse width modulation) output
- 2x Capture input (only one input can be used at the same time)

as well as

- highly-precise acquisition and stimulation over all inputs and outputs
- synchronization of CAN, LIN, MOST, and FlexRay messages.

The time stamp generated at each measurement point makes it possible to achieve precise time correlation between a measurement point and messages on different bus systems.

Electrical isolation has been integrated in the IOcab to protect the connected computer and to avoid measurement errors. This decoupling method electrically isolates the PC from all signals of the D-SUB15 connector. However, there is no electrical isolation between the various signals of the D-SUB15 connector. The shielding (shell of the D-SUB15 socket) is connected to PC ground.

Connectors and pin assignments

The IOcab is connected to the PC with a CANcardXL/XLe via a 15-pin flat-cable connector. The user can access the digital and analog inputs and outputs of the IOcab via the 15-pin D-SUB connector.

The pin assignment of the D-SUB15 plug connector is as follows:

Pin assignment

Pin	Name	Description	
1	DIO0	Digital	Input 0/Output 0
2	DIO2	Digital	Input 2/Output 1
3	DIO4	Digital	Input 4/Output 2/Capture In 2
4	DIO6	Digital	Input 6/Output 3
5	DPWM	Digital	PWM Out/Capture In 1
6	AGND	Reference ground for Analog In/Out	
7	AIO1	Analog	Input 1/Output 1
8	AIO3	Analog	Input 3/Output 3/Comp.Trigger
9	DIO1	Digital	Input 1/Output 0
10	DIO3	Digital	Input 3/Output 1
11	DIO5	Digital	Input 5/Output 2
12	DIO7	Digital	Input 7/Output 3
13	DGND	Reference ground for Digital Input and PWM	
14	AIO0	Analog	Input 0/Output 0
15	AIO2	Analog	Input 2/Output 2
		Shield	Shielding PC ground

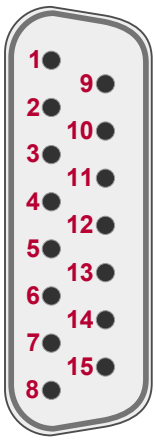

Shielding

AGND and DGND are routed separately for shielding reasons, but are directly connected (low frequency) in IOcab 8444opto.

5.2 Digital Inputs and Outputs

Implementation

The digital outputs are implemented in the IOcab by semiconductor switches, which can interconnect two D-SUB15 plug connector pins. This allows the user to connect both Vcc (high-side switches) and GND (low-side switches).

Note
The digital outputs themselves cannot supply any power; rather they only switch a voltage that has been externally applied. The internal protective circuitry of the digital outputs only protects the circuit from electrostatic discharge.

When connecting inductive loads, the IOcab must be externally protected from high inductive voltages (e. g. free-wheeling diodes) to prevent damage. Continuous short circuiting of multiple digital outputs results in a risk of thermal overload.

Circuit interconnections

In this arrangement the digital inputs and outputs utilize the same IO pins on the D-SUB15 plug connector. Figure 15 shows their circuit interconnections:

Circuit diagram of digital inputs and outputs

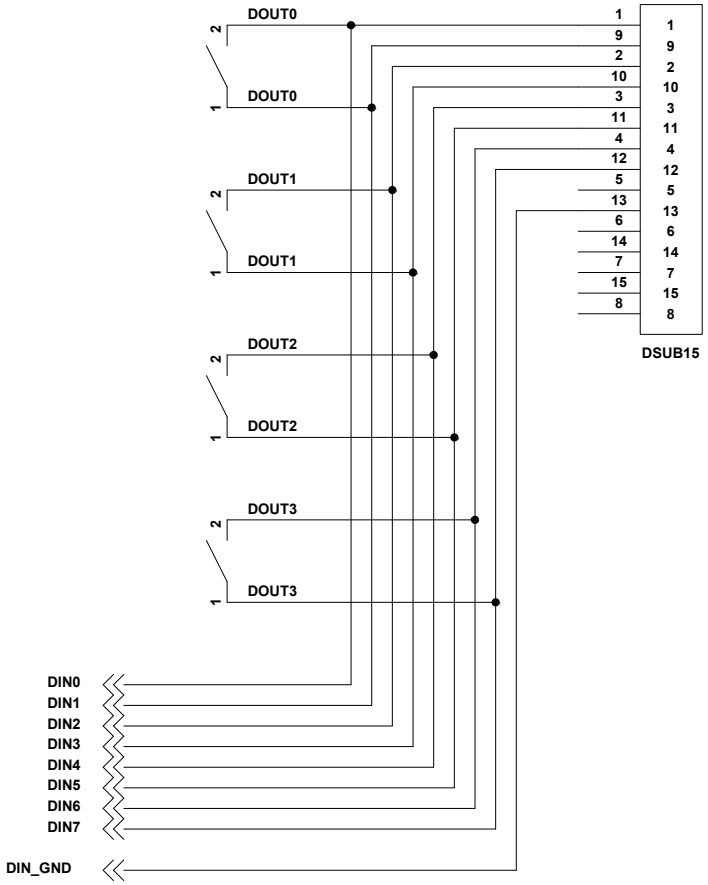

Figure 17: Digital inputs and outputs

Trigger events

With this circuit, when a digital output is used and the internal output switch is closed, two digital input or output lines are always shorted together. Nevertheless, all digital inputs are read-back capable, whereby for example precise switching time points can be defined by the trigger functionality of the inputs.

The voltages at DIN0…DIN7 always reference DGND and can be read by the user in response to a trigger event, cyclically or by polling.

5.2.1 Important Notes on Real Time Capability of Digital Outputs

Switching delays of photo MOS relays

The IOcab 8444opto possesses at the digital outputs photo MOS relays and is not capable for real time applications (e. g. serial communication) due to their switching on and off delays. The following example explains these facts.

Asymmetrical output

The figure below shows a possible scenario where the digital output is controlled by an application (e. g. CANoe). The times for pulse high and pulse low are symmetrically each with 50 ms (20 Hz). The switching-on delay $\Delta t1$ of the photo MOS relay in this example is approx. 870 µs, but the switching-off delay $\Delta t2$ is only 460 µs. This causes a shorter pulse high time than pulse low. The digital output is asymmetrical.

Pulse offset at the digital output

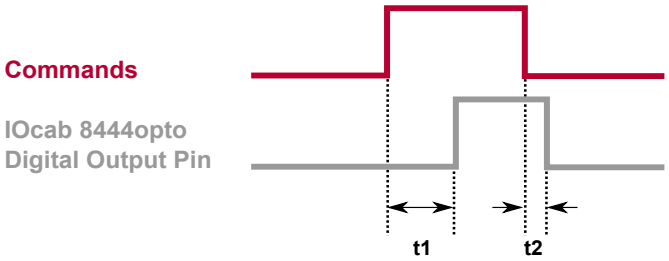

Figure 18: Pulse offset

Latencies

Besides the named delays, additional latencies could occur during the communication between the application and IOcab firmware. Each command is acknowledged inside the IOcab. Afterwards, the IOcab firmware passes the next available command to the digital output. If the acknowledgement is missing, all incoming commands are rejected except the last one, which is buffered in a special register. When the missing acknowledgement is received, the last buffered state is written to the digital output.

Note

Too fast command sequences may not be properly handled, so that complete pulses could be lost on the digital output (see next figure).

To avoid missing pulses, we recommend a maximum switching frequency of 20 Hz. Switching frequencies above 20 Hz could cause sporadic or frequently pulse losses. This behavior is affected due the chosen PC configuration, the operating system and the PC load respectively.

Section Digital PWM Output / Capture Inputs on page 100 explains a way how to generate a PWM directly with the IOcab.

Missing pulse at the digital output

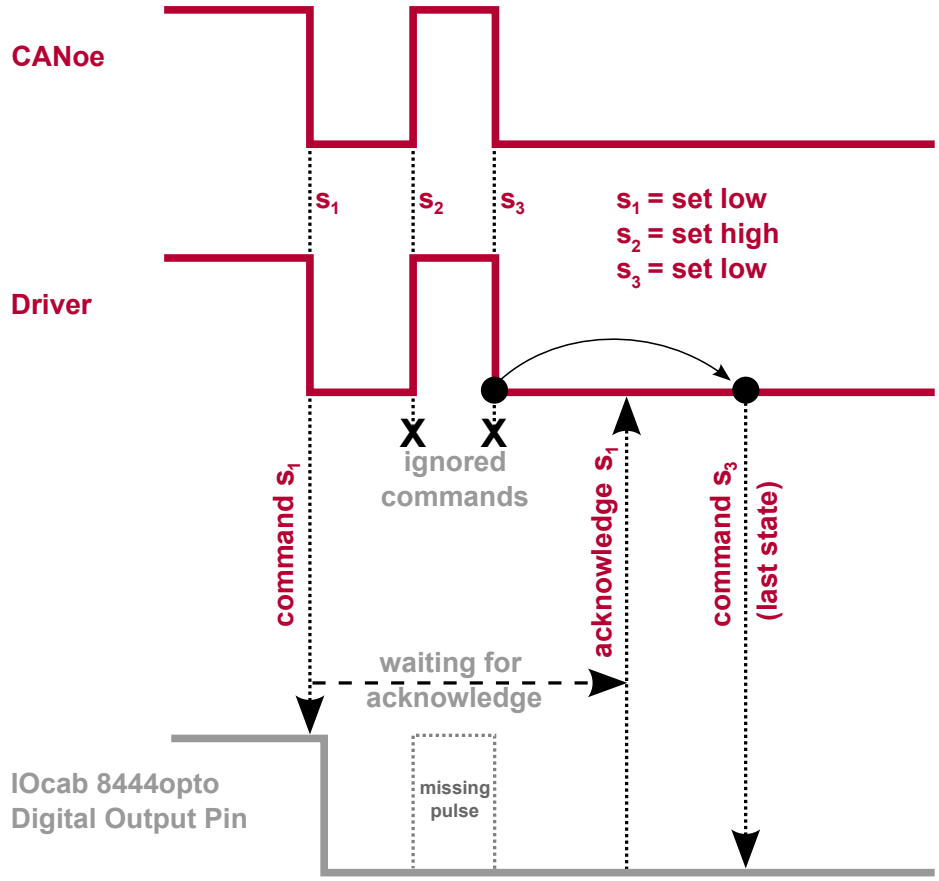

Figure 19: Missing pulses

5.3 Analog Inputs and Outputs

Analog pins

All functions of the analog inputs and outputs AIO0…AIO3 of the IOcab 8444opto share four pins of the D-SUB15 connector. For each of the four analog pins, there is an output driver that can be activated or deactivated. If the output driver of an analog pin is deactivated, an external applied voltage can be measured over the associated analog inputs. If the output driver of an analog pin has been activated, it drives the voltage configured for the output. To protect the output driver, a diode was placed in series with it which isolates the driver from an external applied voltage. The voltage drop of the diode is compensated by the output driver. However, it is not possible for the output to draw a current in this way.

Although the outputs are protected against short circuit, the IOcab 8444opto can skip into an internal error state. After the short circuits have been corrected, the IOcab must be reinitialized.

Note
The analog output driver can be destroyed in input or output mode if a negative voltage is applied to AIO0…AIO3 (V_{AIO0}…V_{AIO3} < V_{AGND}) and must be avoided!

Measurement ranges

Two measurement ranges, **H**(igh) and **L**(ow), are available at AIO0 and AIO1 for the measurement of voltages. In the **L** measurement range voltages from 0 to 8.192 Volt can be measured and in the **H** measurement range voltages from 0 to 32.768 Volt. AIO2 and AIO3 may only be used with the **H** measurement range. Measurement ranges are selected during configuration. It is not possible to measure the voltage of an analog pin in both measurement ranges simultaneously.

Conversion of an analog input signal takes approx. 44 µs. Since conversion of all activated analog inputs is sequentially performed, a delay is associated with the conversion that depends on the number of activated channels. The time stamp of a measurement always references the time point of the trigger event or measurement start on the lowest activated channel.

Circuit connections of analog inputs and outputs

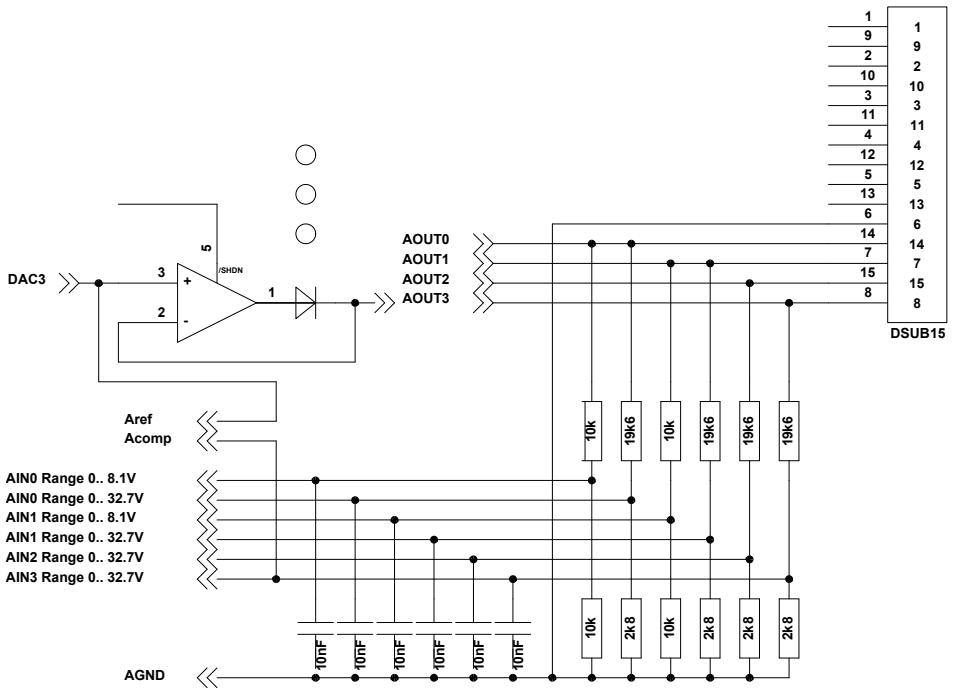

Figure 20: Analog inputs and outputs

Comparator

AIO3 also has the option of initiating a measurement, in parallel to a running measurement, by means of an internal analog comparator that triggers when an upper and/or lower configurable trigger threshold has been exceeded.

The comparator's output value can also be polled by the application while the comparator function is activated.

The measurement of voltage changes always involves a delay when using the analog input circuitry. This also applies to the analog comparator. The jump delay can be calculated by the following formula:

$$\Delta t = -\tau \cdot \ln\left(1 - \frac{V_{Comp} - V_B}{V_{AIN3} - V_B}\right)$$

Δt	Time delay of the comparator
τ	24.5 x 10^{-6} s
V_{Comp}	Preset trigger voltage of the comparator
V_{AIN3}	Input voltage
V_B	Starting voltage from which a jump is made to VAIN3

Delay

As an example consider a voltage jump from 10 V to 24 V with a trigger threshold of 12 V. This would result in a delay of

$$\Delta t = -24.5 \cdot 10^{-6} s \cdot \ln\left(1 - \frac{12\,V - 10\,V}{24\,V - 10\,V}\right) = 3.78\ \mu s$$

5.4 Digital PWM Output / Capture Inputs

General notes

D-SUB15 pin 5 (DPWM) can be used to generate pulse width modulated signals. As an alternative either this pin (DPWM) or pin 10 (DIO4) can be used to measure frequencies (capture mode), whereby the two Capture Inputs differ from one another in their thresholds and voltage ranges. The required function and channel are selected in the configuration. It is not possible to use both the PWM and capture mode and both Capture Inputs simultaneously. At a pin only one mode is selectable at a time.

Circuit interconnections of PWM and capture functions

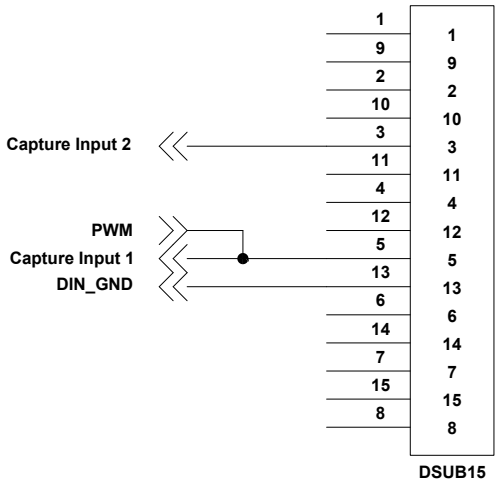

Figure 21: PWM and Capture

PWM or frequency generator

The IOcab 8444opto can be used for PWM or frequency generator, which generates frequencies from 40 Hz to 500 Hz and from 2.4 kHz to 100 kHz. The maximum frequency is essentially limited by the pin's output protection circuit.

The pulse width may be set between 0.0 % and 100.0 %. The resolution of the pulse width depends on the frequency; this dependency is shown in the following graph:

PWM resolution as a function of frequency

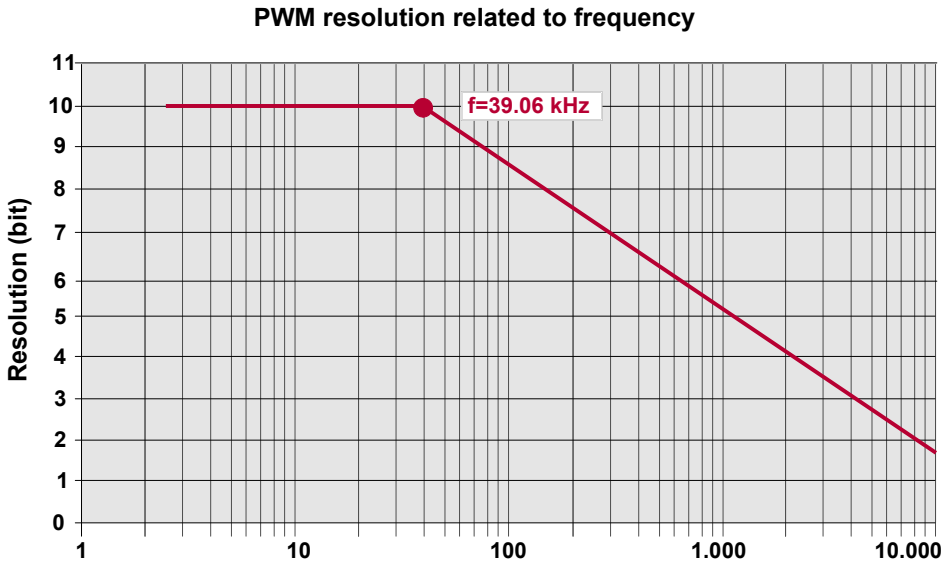

Capture mode

In capture mode both the pulse and pause times of a signal can be simultaneously determined for a signal at the DPWM pin or DIO4 pin of the D-SUB15 connector. One of the three possible measurement ranges must be selected before measurement.
Pulse and pause times between 5 µs and 50 ms can be measured over the Capture

Inputs. This corresponds to a maximum input frequency of 100 kHz at a pulse width of 50 %.



Note
If the IOcab is used in capture mode even if there is no signal connected to the capture input, the capture measurement is canceled by a timeout after 500 ms. In this period of time no other measurement is executed.

5.5 Data Logging

Trigger, polling and cyclic measurement

All measurements can be initiated by three different events:

- measurement on trigger,
- measurement on polling or
- cyclic measurement.

However, only one of the methods listed above may be configured for a specific measurement. One of the following two events may be enabled in the configuration and used as the trigger source:

- level change (H→L and L→H) at DIO0...DIO3
- triggering of the analog comparator

“Measurement on polling“ represents a polling procedure in which a measurement is not initiated until a request for measurement is received from the application. Then the requested data are polled and transferred. With cyclic measurement interval times between 1 ms and 65 seconds may be used. If this time expires the required signals are automatically measured and transferred to the application.

5.6 Firmware Update

Programming firmware

The firmware of the control processor in the IOcab 8444opto may be updated to the latest revision level at any later time.

Step by Step Procedure

Follow these instructions to update the IOcab 8444opto:

1. Connect the IOcab8444 with an inserted CANcardXL/XLe.
2. Open the folder `\Firmware Update\IOcab8444opto\WinBoot` on the Vector Driver Setup.
3. Start `WinBoot.exe`. On the first execution you may get the following error message:

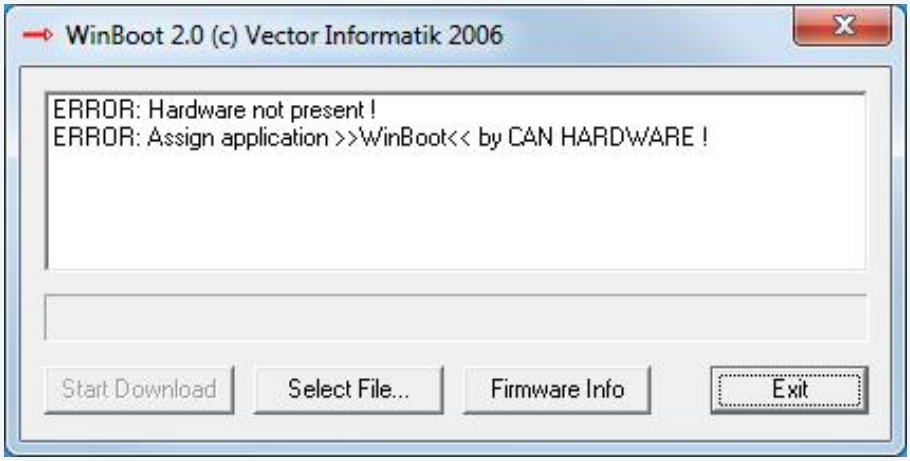

4. Open **Vector Hardware Config** and assign **WinBoot|CAN1** to the IOcab 8444opto to be updated.

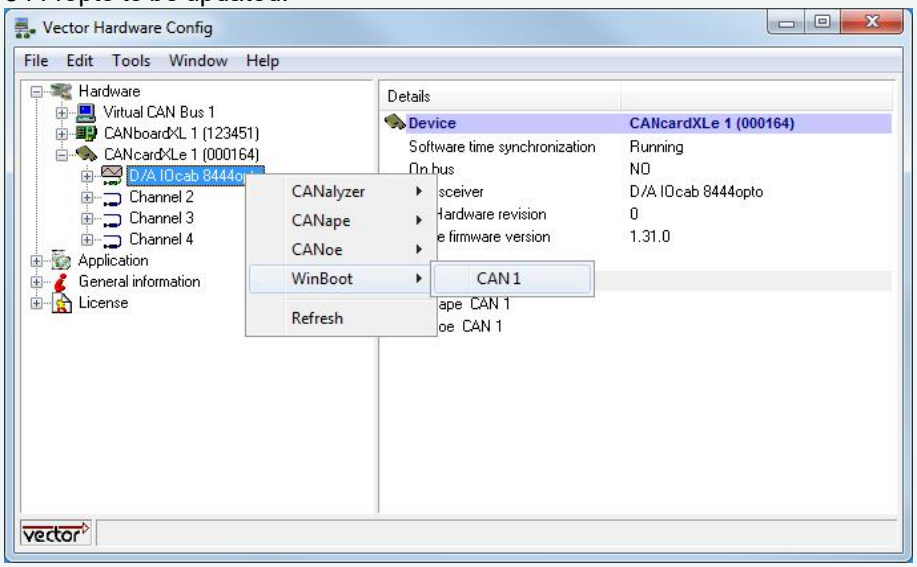

5. Start `WinBoot.exe` again. The IOcab 8444opto can be accessed now.

6. Click **[Select File…]** and open the hex file in folder `\Firmware Update\IOcab8444opto\Firmware`.

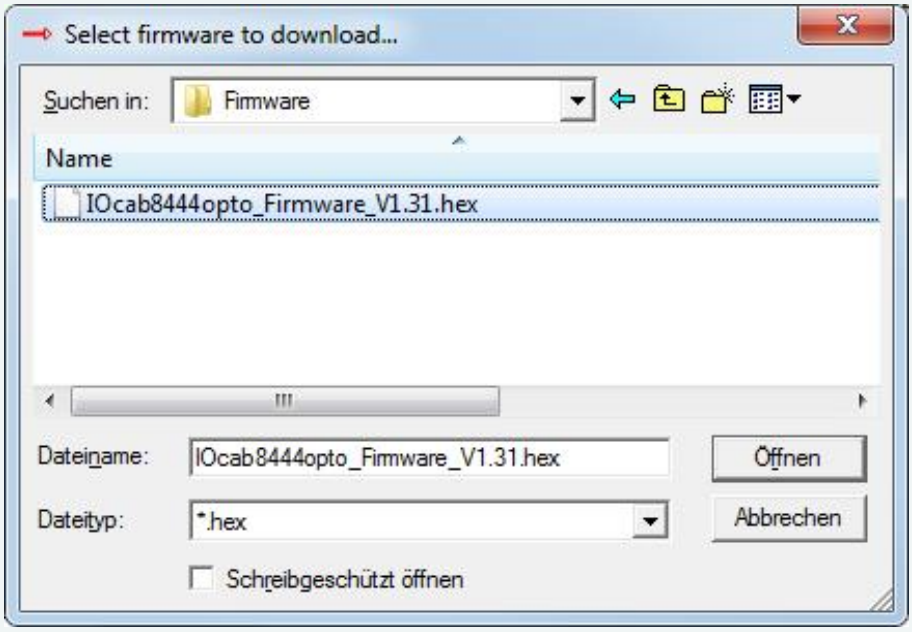

7. Click **[Start Download]**. The programm starts the downloading process.

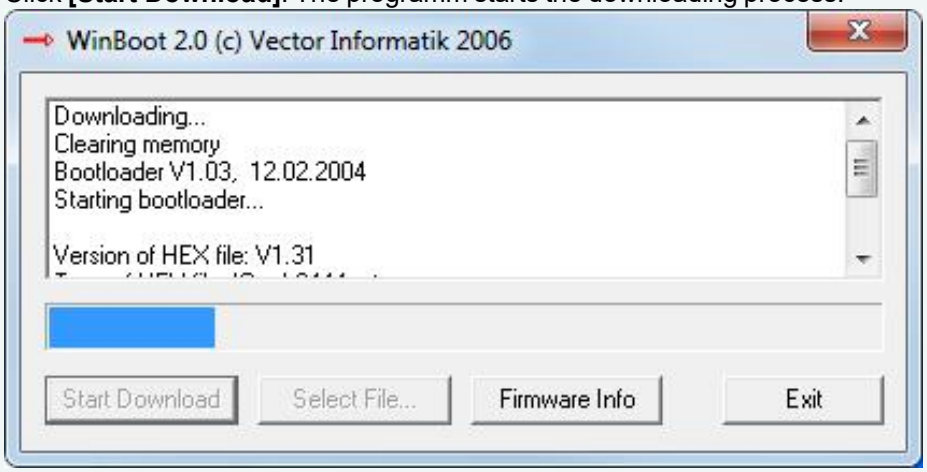

8. The following message appears:

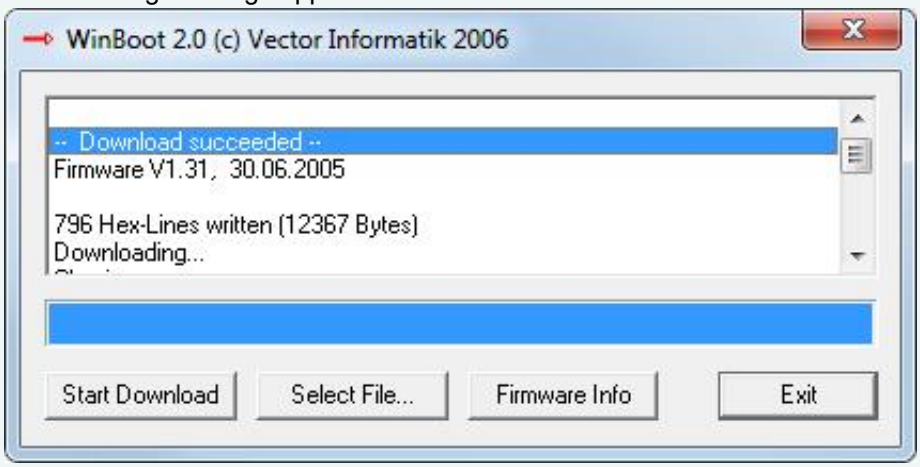

9. Click **[Exit]** and close WinBoot.

5.7 Technical Data

Supply voltage	By Vector CANcardXL/XLe; +5 V
Current consumption	Typ. 180 mA; max. 200 mA
Insulation voltage	Defined by network interface
Time stamp precision	2 µs

Digital Inputs	
Number of inputs	8
Max. input voltage[1]	-36 V … 36 V (DIO0…DIO7 related to DGND)
Max. difference voltage[1]	36 V (DIO0…DIO7 related to DIO0…DIO7)
Input voltage LOW	-36 V … 2.5 V (DIO0…DIO3 related to DGND) -36 V … 1.4 V (DIO4…DIO7 related to DGND)
Input voltage HIGH	6.2 V … 36 V (DIO0…DOI3 related to DGND) 5.9 V … 36 V (DIO4…DIO7 related to DGND)
DIO0…DIO3	Switching threshold typ.: 4.0 V
DIO4…DIO7	Switching threshold typ.: 2.0 V and 4.7 V; Schmitt-Trigger
Protection circuits	By suppressor diodes 36 V, 70 mW
Input resistance	>200 kΩ (DIO0…DIO3) >40 kΩ (DIO4…DIO7)
Input capacitance	~ 25 nF at pin

Digital Outputs	
Number of outputs	4
Max. input voltage[1]	-36 V … 36 V (DIO0…DIO7 related to DGND)
Max. difference voltage[1]	36 V (DIO0…DIO7 related to DIO0…DIO7)
Current loading	- 200 mA …+200 mA (e.g. DIO0 referenced to DIO1)
Protection circuits	Short circuit by resetable fuses overvoltage by 36 V suppressor diodes
ON resistance	<5 Ω
Switching times	Typ.: 0.5 ms, max.: 3 ms

PWM Output	
Number of outputs	1
Frequency range	2 ranges: 40 Hz … 500 Hz; 2.5 kHz …100 kHz
Timing accuracy	For frequency range 40 Hz … 500 Hz: The timing accuracy of the software PWM depends on the number of measurements defined by the user (trigger, cyclic measurement and polling). Best results can be reached if no measurement is defined and no output is changed. For frequency range 2.5 kHz …100 kHz: < 1%
Duty cycle	0.0% … 100.0% (Resolution < 5%)
Resolution	Up to 10 Bit

[1] If the range exceeds the device may be destroyed.

PWM Output	
Voltage reference	DGND
Protection circuits	By suppressor diode, 500 mW
Output voltage LOW	0 V … 0.6 V
Output voltage HIGH	3.8 V … 5.5 V
Output resistance	~320 Ω

Capture Inputs	
Number of inputs	2
Minimum pulse/pause length	5 µs
Maximum pulse/pause length	50 ms
Accuracy	±1%
Input characteristic	Schmitt Trigger
DPWM – Input	
Max. input voltage[1]	-6 V … 12 V (DPWM related to DGND)
Input voltage LOW	-6.0 V … 1.0 V
Input voltage HIGH	4.0 V … 12 V
Switching threshold typ.	1.4 V and 3.2 V
DIO4 – Input	
Max. input voltage[1]	-36 V … 36 V (DIO4 related to DGND)
Max. difference voltage[1]	36 V (DIO4 related to DIO0…DIO7)
Input voltage LOW	-36 V … 1.4 V
Input voltage HIGH	5.9 V … 36 V
Switching threshold typ.	2.0 V and 4. 7V

Analog Inputs	
Number of inputs	4
Max. input voltage[1]	0 V … 36 V (AIN0… AIN3 related to AGND)
Measurement range	AIN0, AIN1: 2 ranges, 0 … 8.192 V, 0 … 32.768 V AIN2, AIN3: 1 ranges, 0 … 32.768 V
Resolution	10 bit in all measurement ranges
Measuring accuracy	±1.5%
Input resistances	0 V … 10 V: 8 kΩ (AIO0 and AIO1) 10 V … 36 V: 4.7 kΩ (AIO0 and AIO1) AIO2 and AIO3: 0 V … 36 V: 8 kΩ
Sampling rate	1 kHz; 3 kHz over XL Driver Library
Conversion time	~ 44 µs per channel
Limit frequency of input filter	Range 0 … 8.192 V:3.1 kHz Range 0 … 32.768 V:6.4 kHz
Time stamp precision	2 µs plus delay of input filter
Protection circuits	By suppressor diodes 36 V, 70 mW, no polarity protection.

Analog Outputs	
Number of outputs	4
Max. back voltage[2]	V_{AIN0}…V_{AIN3} > V_{AGND}: 0 V … 36 V V_{AIN0}…V_{AIN3} < V_{AGND}: not allowed

[1] If the range exceeds the device may be destroyed.
[2] If the range exceeds the device may be destroyed.

Analog Outputs	
Output voltage range	0 … 4.096 V
Resolution	12 Bit
Function	Open emitter with input resistors as pull-down resistors
Accuracy	±1.5%
Current load capacity	+0 … +5 mA (-0 to -5 mA not possible, open emitter)
Circuit protection	Short circuit (AIO0…AIO3 related to AGND): any length of time, max. current: 11 mA[1] per output by suppressor diodes 36 V

Analog Comparator	
Number of comparators	1
Trigger threshold	0 V … 32.768 V, configurable, 10 bit resolution
Function	May be used as trigger or statically polled
Input characteristic	See Analog Input AIO3.

Acquisition Methods	
Trigger	One Trigger, DIN0, DIN1, DIN2, DIN3 or analog comparator
Cyclic measurement	Measurement interval configurable: 1 ms to 65 sec.
Polling / querying	By application

6 IOpiggy 8642

In this chapter you find the following information:

6.1 General Information **109**
6.2 Digital Inputs and Outputs **110**
6.3 Analog Inputs and Outputs **113**
6.4 PWM Outputs (PWM0/PWM1) **114**
6.5 PWM Input (PWM0) **114**
6.6 Analog Comparator **114**
6.7 D-SUB15 Pin Assignment **115**
6.8 Technical Data **116**

6.1 General Information

Introduction

The IOpiggy 8642 is a plug-in board (Piggyback) that is ideal for measurements and outputs of digital or analog signals. This plug-in board can be used with the following Vector devices:

- **VN7570 / VN7572 FlexRay/CAN/LIN/IO network interface**
  Measurement lines accessible via D-SUB62 connector.
- **VN8950 CAN/LIN module**
  Measurement lines accessible on channel 5 via D-SUB15 connector.
- **VN8970 / VN8972 FlexRay/CAN/LIN module**
  Measurement lines accessible on channel 9 via D-SUB15 connector.

Signal lines

The IOpiggy 8642 offers a total of thirteen signal lines. Depending on the configuration, the maximum selectable IO lines are:

- 8x digital input
- 6x digital output
- 4x analog input
- 2x analog output
- 2x PWM output
- 1x PWM input
- 1x analog comparator

Note
The lines may be operated as either input or output. Mixed operation of one line is not possible. Mixed configuration of different lines is allowed.

The configuration is performed in your measurement application (e. g. CANoe). You can define your own measurement condition there for each defined measurement group. When a condition is fulfilled, the related signal values of the measurement group are acquired and passed to the application.

Measurement group 1	Measurement group 2	Measurement group 3
Digital In 0...3	Analog In 0...3	Capture
↯Measurement Condition	↯Measurement Condition	↯Measurement Condition

The following measurement conditions are available for selection:

- Periodic measurement
- Selective polling in the measurement application
- Measurement by level changes (trigger)
  (High → Low and Low → High) at the digital outputs
- Measurement on triggering of the analog comparator
  (see section Analog Comparator on page 114)

6.2 Digital Inputs and Outputs

Description

All digital signal lines can be used as either an input or output. This can be configured in the measurement application (e. g. CANoe). The following diagram illustrates the switching logic:

Switching logic for digital signals

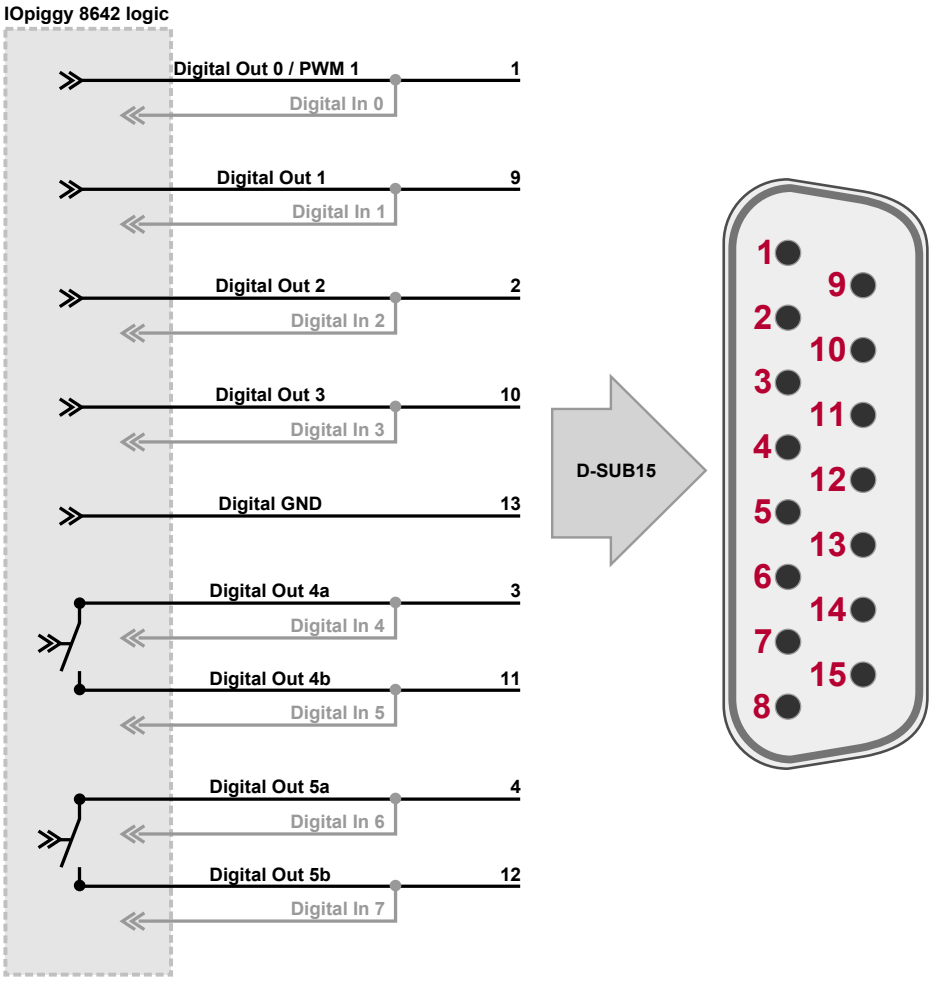

Inputs

The switching threshold can be defined over a range of 0 V … 20 V for all eight digital inputs (Digital In 0…7) with a constant hysteresis of 1 V.

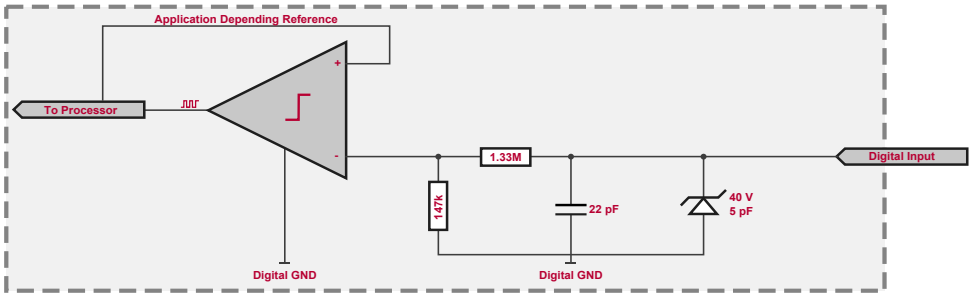

Figure 22: Digital input

Outputs

You can operate the digital outputs in three different modes. They are configured in your measurement application.

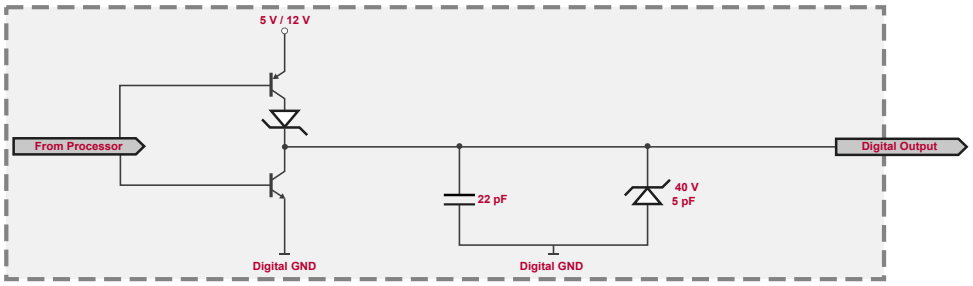

Figure 23: Digital output

- **Push-Pull (only Digital Out 0…3)**
  The LOW state corresponds to digital GND, and the HIGH state corresponds to the internal output voltage defined (by software). To prevent short circuits, you should never interconnect two push-pull outputs. Since the push driver loads the internal supply, the push output delivers less current than the pull input can take.
- **Open-Collector (only Digital Out 0…3)**
  The LOW state corresponds to digital GND, and the HIGH state corresponds to the external voltage applied via a pull-up resistor. The current rating of the Open-Collector output is higher than that of the Push-Pull outputs.
- **MOS switch (only Digital Out 4a/4b and 5a/5b)**
  Floating switch for switching external signals. The signals to be switched are connected to the a/b lines provided. Suitable for all signals between 0 V and 36 V.

Note

The digital outputs 4a/4b and 5a/5b of the IOpiggy 8642 are realized as switching outputs through photo-MOS relays. The relays have an activation delay of 550 µs and a deactivation delay of 100 µs at 25°C. The limit frequency of the relays indicates the damping of the signal to be switched (the signal forms can be changed).

Example

Digital output in Open-Collector mode

Digital Out 0 and 1 are configured as Open-Collector outputs. Afterwards, a constant voltage can be applied via a pull up resistor. While LOW is defined with Digital GND, HIGH depends on the applied voltages.

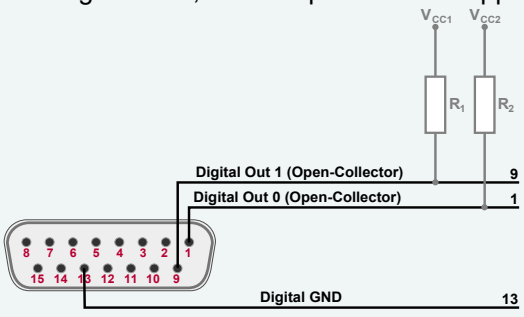

Example

Digital output with external signal source

This example involves toggling a sinusoidal source voltage $V_{signal\ in}$ on and off arbitrarily. In the example, this is done by applying $V_{signal\ in}$ to Digital In 4. The voltages can now be toggled on and off at Digital Out 4b via the internal switch. The measurement application controls switching.

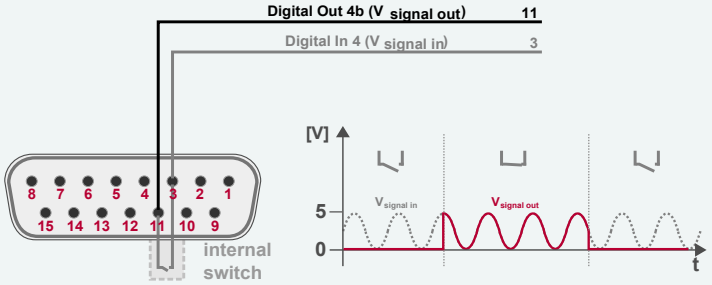

6.3 Analog Inputs and Outputs

Description

The IOpiggy 8642 has four analog inputs. Optionally, the first two inputs (A0 and A1) can be used as analog outputs. This can be configured in the measurement application (e. g. CANoe). The following diagram illustrates the switching logic:

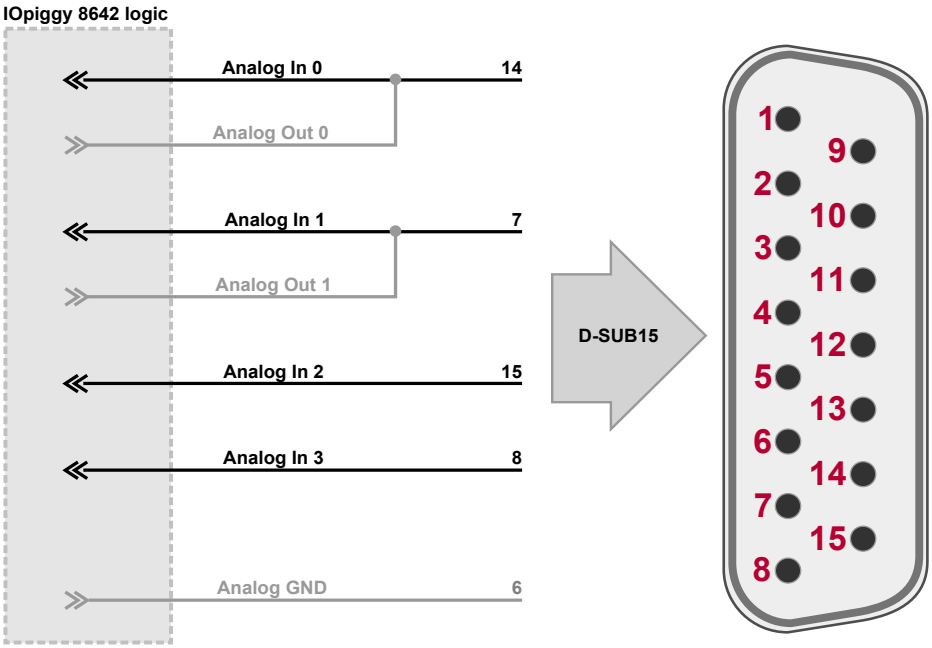

Inputs

You can operate the analog inputs in the following mode:

- **Single-Ended (Analog In 0 … 3)**
  The common reference potential for measurement of the voltages is Analog GND. Four independent signal lines are available for this.

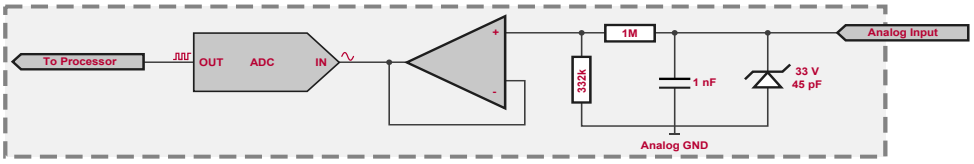

Figure 24: Analog input

Outputs

A voltage between 0 V and 12 V can be output. An analog output can drive a maximum current of 10 mA (at 5 V) and 6 mA (at 12 V) respectively.

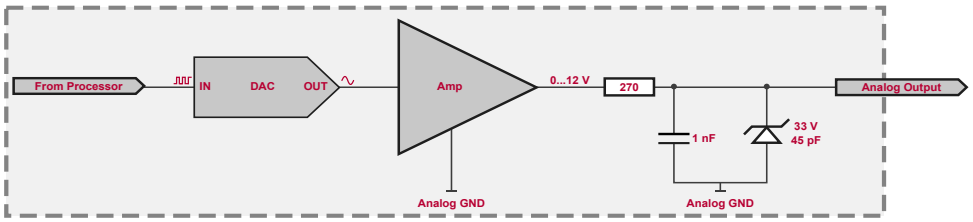

Figure 25: Analog output

6.4 PWM Outputs (PWM0/PWM1)

Description

The IOpiggy 8642 has PWM generators at pin 1 (PWM 1) and at pin 5 (PWM 0), which are operated at a common frequency. The configurable frequency range is between 0.02 Hz and 20 kHz. The two PWM duty cycles are configured in the measurement application and may be set independently over the range 0.0 % to 100.0 %. The duty cycle resolution is 8 bits over the entire frequency range.

6.5 PWM Input (PWM0)

Description

You can use the PWM input to measure the duty cycle of a PWM signal.
The minimum pulse width is 1 µs. This yields a maximum input frequency of 100 kHz (at a 50 % duty cycle).

6.6 Analog Comparator

Description

The analog comparator is permanently connected to Analog Input 0 and enables trigger-controlled measurements. A threshold is defined in the measurement application for this purpose. If the upper or lower threshold limit is exceeded, this triggers a single measurement at the configured measurement groups (see section General Information on page 109).

The trigger can be configured for three cases:

- Trigger when upper limit exceeded
- Trigger when lower limit exceeded
- Trigger on either upper or lower limit violation

6.7 D-SUB15 Pin Assignment

Pin	Pinout 1	Pinout 2	Pinout 3	Pinout 4
1	Digital In 0	Digital Out 0[1]	Digital Out 0[2]	PWM 1
2	Digital In 2	Digital Out 2[1]	Digital Out 2[2]	-
3	Digital In 4	Digital Out 4a[3]	-	-
4	Digital In 6	Digital Out 5a[3]	-	-
5	PWM 0	Capture	-	-
6	**Analog GND**			
7	Analog In 1	Analog Out 1	-	-
8	Analog In 3	-	-	-
9	Digital In 1	Digital Out 1[1]	Digital Out 1[2]	-
10	Digital In 3	Digital Out 3[1]	Digital Out 3[2]	-
11	Digital In 5	Digital Out 4b[3]	-	-
12	Digital In 7	Digital Out 5b[3]	-	-
13	**Digital GND**			
14	Analog In 0	Analog Out 0	-	-
15	Analog In 2	-	-	-

[1] Push-Pull

[2] Open-Drain

[3] a/b line: switched by PhotoMOS relais, external signal at a is switched to b.

6.8 Technical Data

Supply voltage	By base unit
Power consumption	Typ. 0.5 W, max. 1.25 W

Digital Inputs	
Number	8x TTL with variable switching threshold and fixed switching hysteresis.
Input voltage	0 V … 36 V
Switching hysteresis	1000 mV ± 10%, configurable threshold 0 V … 20 V
Switching time	300 … 500 ns
Input resistance	1.33 MOhm

Digital Outputs	
Number	6
Output voltage	Push-Pull: 5 V or 12 V (for all digital outputs collectively) OC: 0 V … 36 V MOS switch: -36 V … +36 V
Current carrying capacity at inactive analog outputs	Push: max. 80 mA at 5 V or max. 24 mA at 12 V (for all digital outputs collectively) OC/Pull:100 mA MOS switch:450 mA
Output current	Max. 400 mW
Protection circuit	Push: Current monitoring circuit on overload OC/Pull: Short circuit by self-resetting fuse MOS switch: Short circuit by self-resetting fuse
On resistance	External signals: max. 2.5 Ohm (MOS)
Output capacitance	External signals: 1.5 pF (MOS)
Switching time	Internal: 500 ns External signals typ. activation delay: 550 µs at 25°C typ. deactivation delay: 100 µs at 25°C

Analog Inputs	
Number of inputs	4 single-ended
Measurement range	Single-ended: 0 V … 36 V
Input resistance	AIN0, AIN1: 48 kOhm AIN2, AIN3: 1 MOhm
Resolution	12 bit
Accuracy	0.1% of the measured value +/- 20 mV
Sampling rate	Max. 1 kHz

Analog Outputs	
Number of outputs	2
Voltage range	0 V … 12 V
Accuracy	2 %
Resolution	12 bit
Conversion time	9 µs
Current carrying capacity at inactive digital outputs	Max. 10 mA at 5 V and 6 mA at 12 V
Output resistance	~ 290 Ohm

PWM Outputs (PWM0 / PWM1)	
Number of outputs	2, both with the same frequency and with variable duty cycles
Frequency range	0.02 Hz … 20 kHz at 8 bit
Resolution	8 bit
Levels	Low: 0 V High: 5 V or 12 V (collectively with digital outputs)
Current carrying capacity	**PWM0** Push: max. 80 mA at 5 V or max. 24 mA at 12 V (for all digital outputs collectively) **PWM0/PWM1** Pull: max. 100 mA
Protection circuit	PWM0 Push: Current monitoring circuit on overload
Output resistance	< 100 Ohm

PWM Input (PWM0)	
Number of inputs	1
Pulse / pause times	Min: 5 µs
Precision	±1%
TTL Levels	LOW: 0 V … < V_{HIGH} (0 V … 0.7 V) HIGH: > V_{LOW} … < V_{REF} (1.7 V … 3.3 V)
Input voltage	0 V … 36 V

7 Cables and Connectors

In this chapter you find the following information:

7.1 CAN/LIN 120
7.1.1 CANcable0 120
7.1.2 CANcable1 120
7.1.3 CANcableA 121
7.1.4 CANcableTnT, CANcable Bunch Plug 121
7.1.5 CANcableTnT Term 122
7.1.6 CANcableY 122
7.1.7 CANcable 2Y 123
7.1.8 CANterm 120 124
7.1.9 CANcable Set Pro 124

7.2 Ethernet 125
7.2.1 AEcable 2Y Family 125
7.2.2 AEcable ix/DSUB9 129
7.2.3 BRcable 2Y 130
7.2.4 VNcable D-SUB9 HSD Z Male 131
7.2.5 VNcable D-SUB9 HSD Z Female 132
7.2.6 Ethernet Cables 133

7.3 MOST 135
7.3.1 ECL Cable 135
7.3.2 Fiber Optic Cable 135
7.3.3 Fiber Optic Cable Coupling 136

7.4 FlexRay 137
7.4.1 FRcable Set 137
7.4.2 FRcable A 137
7.4.3 FRcable AB 138
7.4.4 FRterm 138
7.4.5 FR/CANcable 2Y 139

7.5 OBDcables 140
7.5.1 OBDcable CAN 140
7.5.2 OBDcable OEM GM 141
7.5.3 OBDcable OEM01 142
7.5.4 OBDcable VN88 143
7.5.5 OBDcable VN88A 144
7.5.6 OBDcable DoIP/CAN B1 145

7.6 Miscellaneous 146
7.6.1 Cable Binder 3pol Connector with Pigtail 146
7.6.2 Power Sync Cable 2xBinder <> Banana Plugs 147

7.6.3 Breakout Box D62Y9 148
7.6.4 VNcable DSUB62 150
7.6.5 VNcable DSUB62 A 151
7.6.6 VNcable DSUB62 B 152
7.6.7 VNcable D62Y9 153
7.6.8 VNcable DSUB37 154
7.6.9 VNcable 3Y 155
7.6.10 Terminal Block DSUB37 156
7.6.11 Breakout Box VN88 157
7.6.12 VX1362B CAN Cable LEMO/Banana Plugs 1.5M 158
7.6.13 Fibre Wire 10 m for CANcab 251fiber 159
7.6.14 Fibre Wire 25 m for CANcab 251fiber 159
7.6.15 Fibre Wire 50 m for CANcab 251fiber 159
7.6.16 USB Cables 160

7.1 CAN/LIN

7.1.1 CANcable0

Low-speed cable

Description	CAN/LIN connection cable Note: When using with devices that have a primary and a secondary D-SUB9 pin assignment, only the primary channel is accessible.
Length	0.3 m
Connectors	2x female D-SUB9 connectors
Temp. range	Fixed installation: -30 °C ...+80 °C Flexible use: -10 °C ...+80 °C
Min. bending radius	Fixed installation: 21 mm Flexible use: 42 mm
Properties	Without terminating resistors
Part number	05002

Setup

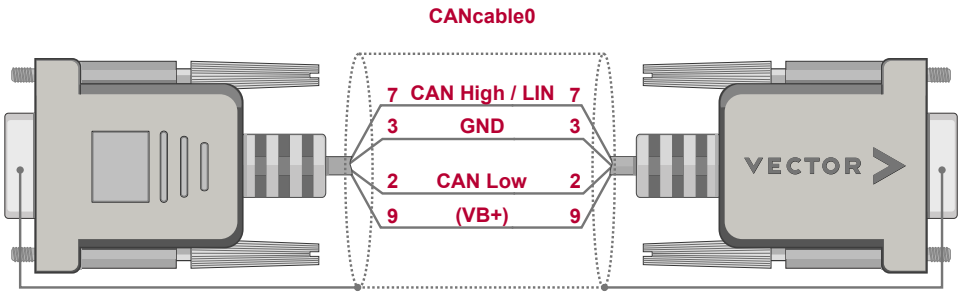

7.1.2 CANcable1

High-speed cable

Description	CAN connection cable Note: When using with devices that have a primary and a secondary D-SUB9 pin assignment, only the primary channel is accessible.
Length	0.3 m
Connectors	2x female D-SUB9 connectors
Temp. range	Fixed installation: -30 °C ...+80 °C Flexible use: -10 °C ...+80 °C
Min. bending radius	Fixed installation: 21 mm Flexible use: 42 mm
Properties	Two parallel 120 Ohm terminating resistors
Part number	05001

Setup

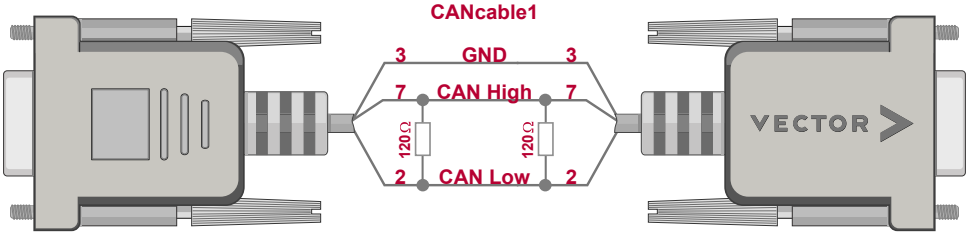

7.1.3 CANcableA

All-purpose cable

Description	CAN/LIN connection cable
Length	0.5 m
Connectors	1x female D-SUB9 connector 4x stripped wires
Temp. range	Fixed installation: -30 °C ...+80 °C Flexible use: -10 °C ...+80 °C
Min. bending radius	Fixed installation: 21 mm Flexible use: 42 mm
Part number	Included in CANcable Set Pro (part number 05060)

Setup

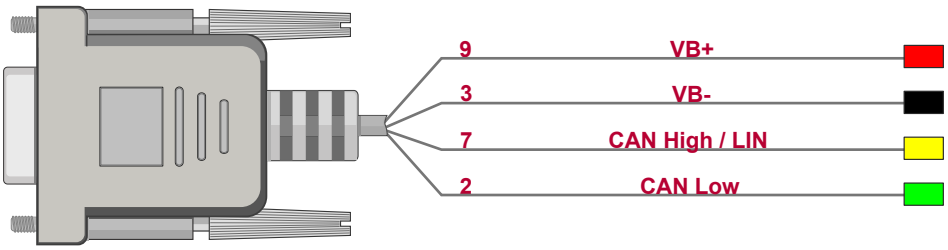

7.1.4 CANcableTnT, CANcable Bunch Plug

Misc. CAN

Description	Connection for: - CAN 2.0, CAN FD, CAN SIC - Truck & Trailer CAN (ISO 11992)
Length	1.5 m
Connectors	1x female D-SUB9 connector 4x bunch plugs
Temp. range	Fixed installation: -25 °C ...+70 °C Flexible use: -5 °C ...+70 °C
Min. bending radius	Fixed installation: 22.4 mm Flexible use: 56.0 mm
Properties	Without terminating resistor
Part number	05016

Setup

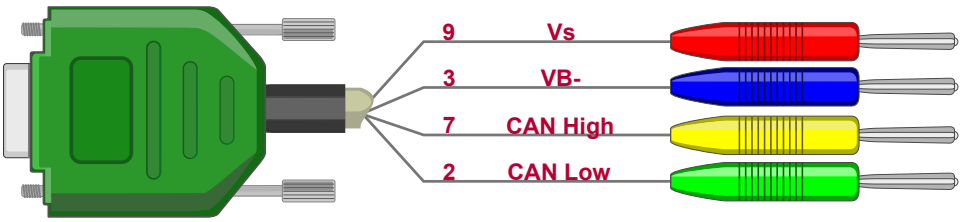

7.1.5 CANcableTnT Term

Truck & Trailer CAN

Description	Connection cable for Truck & Trailer (ISO 11992)
Length	1.5 m
Connectors	1x female D-SUB9 connector 4x bunch plugs
Temp. range	Fixed installation: -25 °C ...+70 °C Flexible use: -5 °C ...+70 °C
Min. bending radius	Fixed installation: 22.4 mm Flexible use: 56.0 mm
Properties	With terminating resistors
Part number	05015

Setup

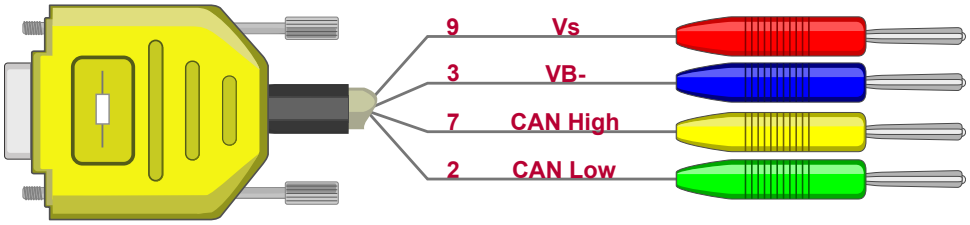

7.1.6 CANcableY

Extension cable

Description	Y extension cable for CAN or LIN
Length	2 m (overall length)
Connectors	3x female D-SUB9 connectors
Temp. range	Fixed installation: -30 °C ...+80 °C Flexible use: -10 °C ...+80 °C
Min. bending radius	Fixed installation: 21 mm Flexible use: 42 mm
Properties	Including gender changer
Part number	Included in CANcable Set Pro (part number 05060)

Setup

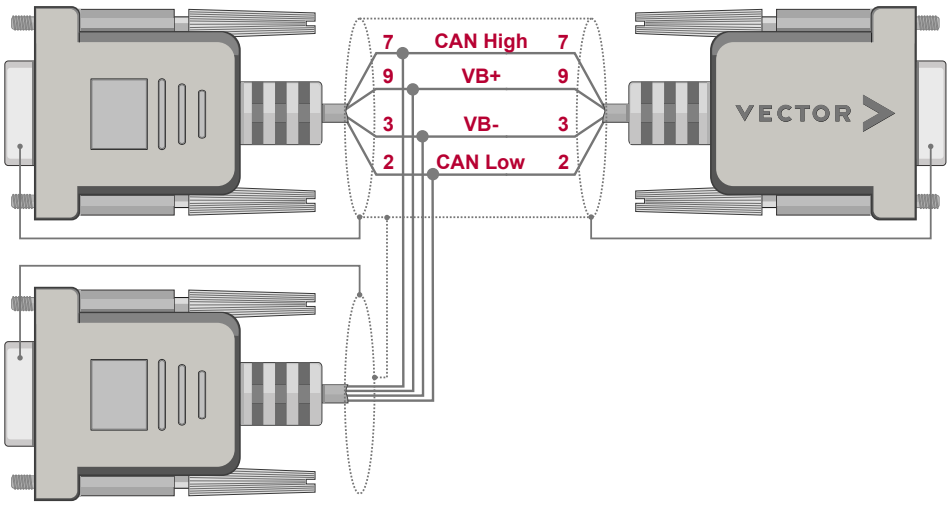

7.1.7 CANcable 2Y

Y cable

Description	Y cable for Vector CAN/LIN interfaces with D-SUB9 double assignment (VN1600 interface family, VN8970 etc.). Splits the double assignment into two separate D-SUB9 connectors (CH A and CH B). Examples: ▶ **VN1610** - CH1/2 → Channel 1 (CH A) and 2 (CH B) ▶ **VN1630** - CH1/3 → Channel 1 (CH A) and 3 (CH B) - CH2/4 → Channel 2 (CH A) and 4 (CH B) ▶ **VN8970** - CH1/5 → Channel 1 (CH A) and 5 (CH B) - CH2/6 → Channel 2 (CH A) and 6 (CH B) - CH3/7 → Channel 3 (CH A) and 7 (CH B) - CH4/8 → Channel 4 (CH A) and 8 (CH B) The pin assignments of the D-SUB9 connectors CH A and CH B depend on the used bus transceivers inside the interface (see section D-SUB Pin Assignment on page 61).
Length	0.3 m
Connectors	1x female D-SUB9 connector 2x male D-SUB9 connectors
Temp. range	Fixed installation: -30 °C ...+80 °C Flexible use: -10 °C ...+80 °C
Min. bending radius	Fixed installation: 27.5 mm Flexible use: 55.0 mm
Part number	05075

Setup

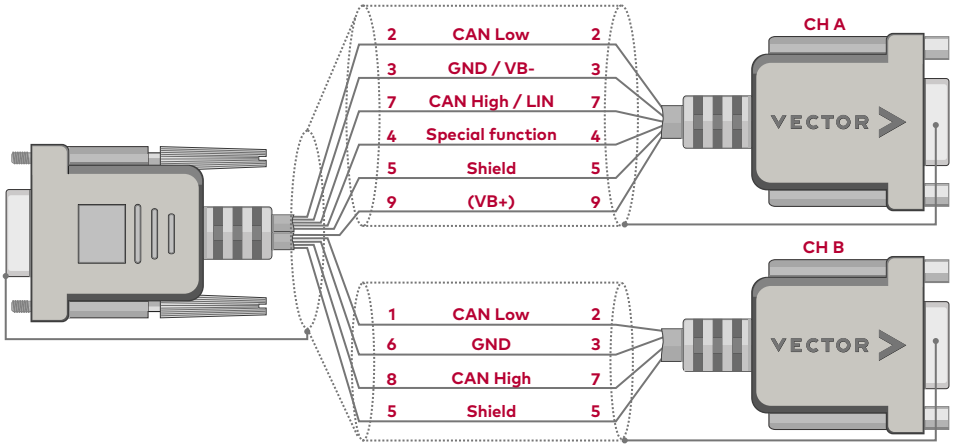

7.1.8 CANterm 120

Terminating resistor

Description	CAN adapter for high-speed CAN buses Note: When using with devices that have a primary and a secondary D-SUB9 pin assignment, only the primary channel is accessible.
Connectors	1x female D-SUB9 connector 1x male D-SUB9 connector
Properties	One 120 Ohm terminating resistor
Part number	05004

Setup

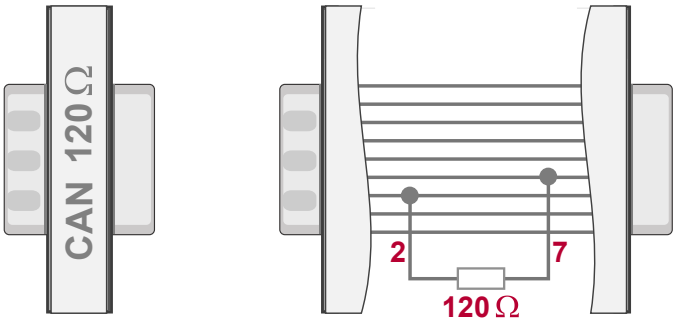

7.1.9 CANcable Set Pro

Description	Cable set for CAN/LIN incl.: ▶ 1x CANcable0 ▶ 1x CANcableY ▶ 2x CANcableA ▶ 2x CANterm 120 ▶ 2x Gender changer male/male ▶ 1x Gender changer female/female
Temp. range	Fixed installation: -30 °C ...+80 °C Flexible use: -10 °C ...+80 °C
Min. bending radius	Fixed installation: 21 mm Flexible use: 42 mm
Part number	05060

7.2 Ethernet

7.2.1 AEcable 2Y Family

7.2.1.1 General Information

Connection cable

Description	Connection cable for 1000BASE-T1 and 100BASE-T1 Ethernet network interfaces with an iX connector, a splitter box and different ends for multiple use cases (see section Connector Options on page 126). The splitter box separates the two Ethernet channels into two separate cables. The shieldings of CHA and CHB are connected to each other, but are electrically isolated from the shield of the network interface via capacitors.
Length	approx. 1.8 m*
Connectors	1x iX connector (male)

* exceptions see section Connector Options on page 126

General cable with iX connector

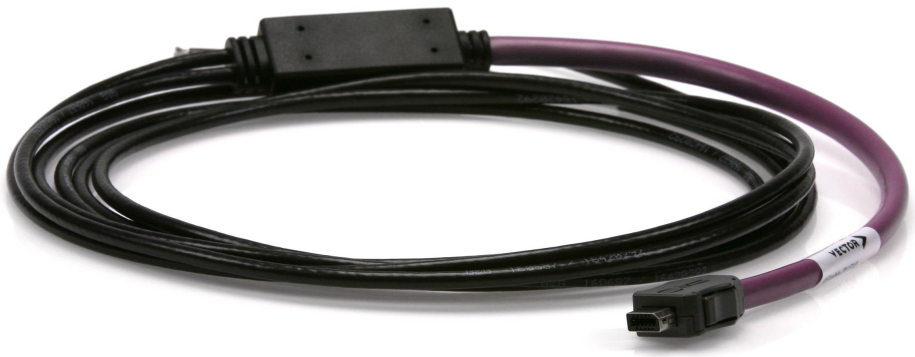

Pin assignment

Pin	Assignment	Color
1	CHB MDI+	white/orange
2	CHB MDI-	orange
3	Not connected	-
4	Not connected	blue
5	Not connected	white/blue
6	CHA MDI+	white/green
7	CHA MDI-	green
8	Not connected	-
9	Not connected	white/brown
10	Not connected	brown
Shield	Shield	-

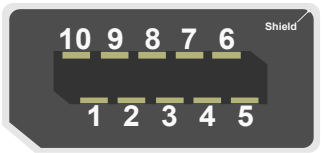

7.2.1.2 Connector Options

Overview

The following table shows an overview of the available connectors for the AEcable 2Y:

AEcable 2Y	Connectors	Part no.
EVA	2x open end	05124
EVA 10m	2x open end Cable length: 10 m	05211
H-MTD Zjp	1x H-MTD, coding Z, type jack Manufacturer part number: Rosenberger E6K10A-1CAZ5-Z 1x H-MTD, coding Z, type plug Manufacturer part number: Rosenberger E6S10A-1CAZ5-Z	05134
H-MTD Zjj	2x H-MTD, coding Z, type jack Manufacturer part number: Rosenberger E6K10A-1CAZ5-Z	05133
H-MTD Zpp	2x H-MTD, coding Z, type plug Manufacturer part number: Rosenberger E6S10A-1CAZ5-Z	05135
HSD Zjp	1x HSD, coding Z, type jack Manufacturer part number: Rosenberger D4K10A-1D5A5-Z 1x HSD, coding Z, type plug Manufacturer part number: Rosenberger D4S10A-1D5A5-Z	05126
HSD Zjj	2x HSD, coding Z, type jack Manufacturer part number: Rosenberger D4K10A-1D5A5-Z	05128
HSD Zpp	2x HSD, coding Z, type plug Manufacturer part number: Rosenberger D4S10A-1D5A5-Z	05129
MATEnet Zfh	1x MATEnet, coding Z, type header Manufacturer part number: TE (Tyco Electronics, TE Connectivity) 1-1703930-2 TE Nanomqs Terminal 9-2302451-1 TE male insert modul 9-2302461-9 TE 1-port Inline Coupler Z-Coding 1x MATEnet, coding Z, type frame Manufacturer part number: TE (Tyco Electronics, TE Connectivity) 1-1703930-2 Nanomqs Terminal 9-2302450-1 female insert modul 9-2302454-9 1-port Frame UTP Z-Coding	05137
MATEnet Zff	2x MATEnet, coding Z, type frame Manufacturer part number: TE (Tyco Electronics, TE Connectivity) 1-1703930-2 TE Nanomqs Terminal 9-2302451-1 TE male insert modul 9-2302461-9 TE 1-port Inline Coupler Z-Coding	05138
MATEnet Zhh	2x MATEnet, coding Z, type header Manufacturer part number: TE (Tyco Electronics, TE Connectivity) 1-1703930-2 Nanomqs Terminal 9-2302450-1 female insert modul 9-2302454-9 1-port Frame UTP Z-Coding	05136
DSUB9 male	2x D-SUB9, type male	05119
RJ45pp	2x RJ45, type plug	05131
RJ45jj	2x RJ45, type jack	05130
RJ45jp	1x RJ45, type plug 1x RJ45, type jack	05132

H-MTD Z connectors



Figure 26: Jack



Figure 27: Plug

HSD Z connectors

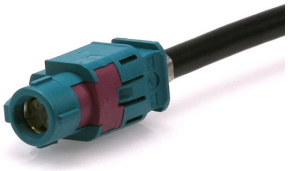

Figure 28: Jack



Figure 29: Plug

MATEnet Z connectors

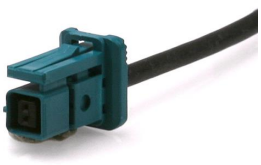

Figure 30: Frame

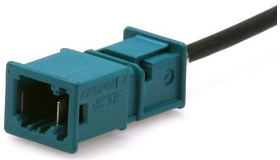

Figure 31: Header

D-SUB9 / RJ45 connectors



Figure 32: D-SUB 9 (male)



Figure 33: RJ45 (male)

Pin assignment

The following table shows the pin assignment depending on the connector type:

Connector Type	Ethernet MDI+	Ethernet MDI-
H-MTD Z 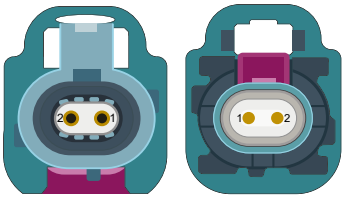 jack / plug	Pin 1	Pin 2
HSD Z 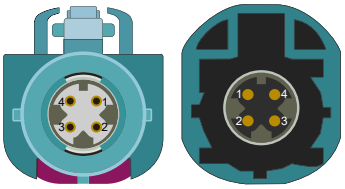 jack / plug	Pin 2	Pin 3
MATEnet Z 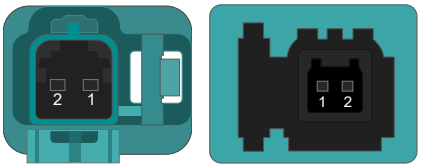 frame / header	Pin 1	Pin 2
D-SUB9 (2x) (one MDI channel at each connector) 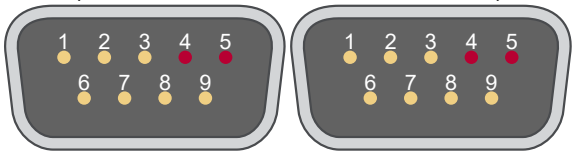	Pin 4	Pin 5
RJ45 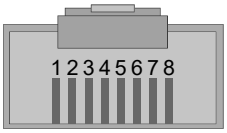	Pin 1	Pin 2

Note

Please note that the AEcable 2Y DSUB9 male is intended for use with 100BASE-T1 only. All other cables are intended for 1000BASE-T1 and 100BASE-T1.

7.2.2 AEcable ix/DSUB9

7.2.2.1 General Information

Connection cable

Description	Connection cable for 100BASE-T1 Ethernet network interfaces with an iX and a D-SUB9 connector. The shielding of the two connectors is not connected to each other. The D-SUB9 provides two Ethernet channels: CHA and CHB.
Length	approx. 15 cm between the connectors
Minimum bending radius	32.5 mm (5x outer diameter, outer diameter: 6.5 mm)
Connectors	1x iX connector 1x D-SUB9 (male)
Part number	05214



Pin assignment

Pin	Assignment	Color
1	CHB MDI+	white/orange
2	CHB MDI-	orange
3...5	Not connected	-
6	CHA MDI+	white/green
7	CHA MDI-	green
8...10	Not connected	-
Shield	Shield	-

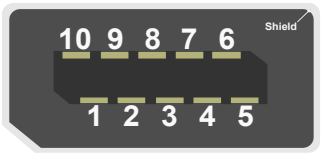

Pin	Assignment	Color
1	CHB MDI+	-
2	CHB MDI-	-
3	Not connected	-
4	CHA MDI+	-
5	CHA MDI-	-
6...9	Not connected	-
Shield	Shield	-

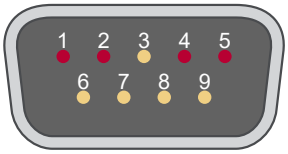

7.2.3 BRcable 2Y

Y cable

Description	Y cable for VN5600 interfaces with D-SUB9 double assignment. Splits the double assignment into two separate D-SUB9 connectors (CH A and CH B), each with a separate BroadR-Reach channel.
Length	0.36 m (overall length)
Connectors	1x female D-SUB9 connector 2x male D-SUB9 connectors
Part number	05103

Setup

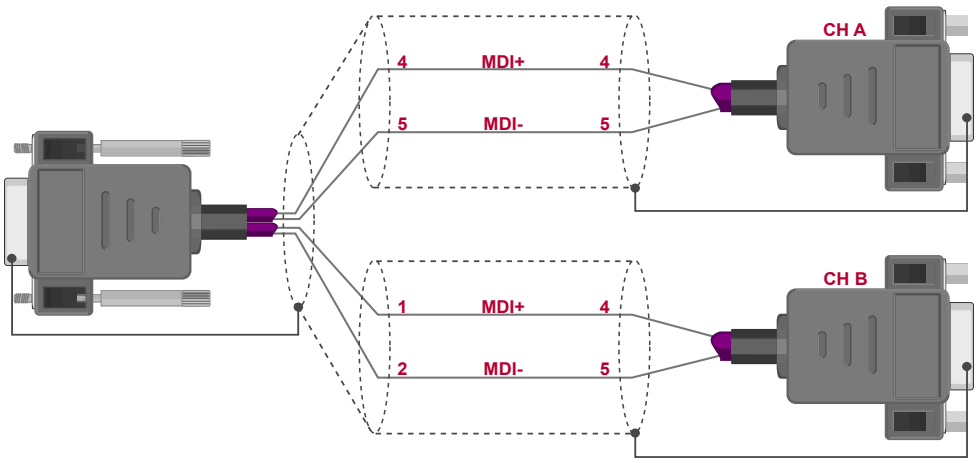

7.2.4 VNcable D-SUB9 HSD Z Male

Connection cable

Description	Connection cable for BroadR-Reach Ethernet network interfaces
Length	approx. 50 cm
Connectors	1x Rosenberger HSD Z (male) 1x D-SUB9 (female)
Part number	05117



Pin assigment

Pin	HSD Connector D4S10A-1D5A5-Z
1	Not connected
2	CH1 MDI+
3	CH1 MDI-
4	Not connected
Shield	Connected

Pin	D-SUB9 Connector
1..3	Not connected
4	CH1 MDI+
5	CH1 MDI-
6...9	Not connected
Shield	Connected

Note
When using this cable, only Ethernet channel 1 is supported. Channel 2 is not connected.

7.2.5 VNcable D-SUB9 HSD Z Female

Connection cable

Description	Connection cable for BroadR-Reach Ethernet network interfaces
Length	approx. 50 cm
Connectors	1x Rosenberger HSD Z (female) 1x D-SUB9 (female)
Part number	05118



Pin assigment

Pin	HSD Connector D4K10A-1D5A5-Z
1	Not connected
2	CH1 MDI+
3	CH1 MDI-
4	Not connected
Shield	Connected

Pin	D-SUB9 Connector
1..3	Not connected
4	CH1 MDI+
5	CH1 MDI-
6...9	Not connected
Shield	Connected

Note
When using this cable, only Ethernet channel 1 is supported. Channel 2 is not connected.

7.2.6 Ethernet Cables

7.2.6.1 Ethernet Cable 0.25m

Connection cable

Description	Cable for Ethernet network interfaces.
Length	approx. 0.25 m
Connectors	2x RJ45
Temp. range	Fixed installation: -10 °C ...+60 °C
Min. bending radius	Fixed installation: 90 mm
Part number	29064

7.2.6.2 Ethernet Cable 10Gbps 0.5m

Connection cable

Description	Cable for Ethernet network interfaces. Designed for vehicle interiors.
Length	approx. 0.5 m
Connectors	2x RJ45 (LxWxH: 41.9 x 12.1 x 15.6 mm)
Category	Cat 6A
Temp. range	Fixed installation: -20 °C ...+60 °C
Min. bending radius	Fixed installation: 87 mm
Outer diameter	6.2 mm
Part number	30017

7.2.6.3 Ethernet Cable 10Gbps 2m

Connection cable

Description	Cable for Ethernet network interfaces. Designed for vehicle interiors.
Length	approx. 2 m
Connectors	2x RJ45 (LxWxH: 41.9 x 12.1 x 15.6 mm)
Category	Cat 6A
Temp. range	Fixed installation: -20 °C ...+60 °C
Min. bending radius	Fixed installation: 87 mm
Outer diameter	6.2 mm
Part number	30016

7.2.6.4 Ethernet Cable 10Gbps 7.5m

Connection cable

Description	Cable for Ethernet network interfaces. Designed for vehicle interiors.
Length	approx. 7.5 m
Connectors	2x RJ45 (LxWxH: 41.9 x 12.1 x 15.6 mm)
Category	Cat 6A
Temp. range	-20 °C ...+60 °C
Min. bending radius	60 mm
Outer diameter	6.2 mm
Part number	30018

7.2.6.5 Ethernet Cable Robust 10Gbps 0.5m

Connection cable

Description	Robust cable for Ethernet network interfaces. Designed for vehicle interiors during demanding long-term vehicle testing, with extended temperature range and higher cable robustness against oil, fuel and ozone.
Length	approx. 0.5 m
Connectors	2x RJ45 (LxWxH: 44.7 x 13.4 x 16.1 mm)
Temp. range	-40 °C ...+80 °C
Category	Cat 6A
Min. bending radius	Fixed installation: 40 mm
Outer diameter	6.6 mm
Part number	30024

7.2.6.6 Ethernet Cable Robust 10Gbps 2.0m

Connection cable

Description	Robust cable for Ethernet network interfaces. Designed for vehicle interiors during demanding long-term vehicle testing, with extended temperature range and higher cable robustness against oil, fuel and ozone.
Length	approx. 2 m
Connectors	2x RJ45 (LxWxH: 44.7 x 13.4 x 16.1 mm)
Temp. range	-40 °C ...+80 °C
Category	Cat 6A
Min. bending radius	Fixed installation: 40 mm
Outer diameter	6.6 mm
Part number	30025

7.2.6.7 Ethernet Cable Robust 10Gbps 7.5m

Connection cable

Description	Robust cable for Ethernet network interfaces. Designed for vehicle interiors during demanding long-term vehicle testing, with extended temperature range and higher cable robustness against oil, fuel and ozone.
Length	approx. 7.5 m
Connectors	2x RJ45 (LxWxH: 44.7 x 13.4 x 16.1 mm)
Temp. range	-40 °C ...+80 °C
Category	Cat 6A
Min. bending radius	Fixed installation: 40 mm
Outer diameter	6.6 mm
Part number	30026

7.3 MOST

7.3.1 ECL Cable

ECL

Description	ECL cable for VN2640
Length	1.5 m
Connectors	1x male 3-pin Binder connectors (type 711) 3x stripped wires
Part number	30014

Setup

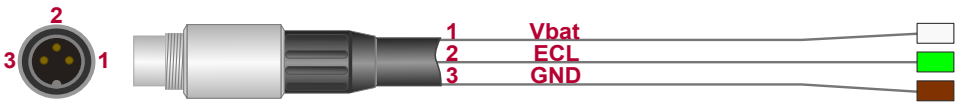

7.3.2 Fiber Optic Cable

Description	The devices of the VN2600 Family can be connected with the MOST bus by using the Vector MOST fiber optic cable.
Length	1 m
Connectors	1x Standard MOST 2+0 connector 2x POF fiber optic cables 2x HFBR 4531 connector
Minimum bending radius	The minimum bending radius of the POF fiber optic cables used is 50 mm. Bending radii less than 50 mm can cause permanent damage to the fibers.
Part number	22041



Direction arrows are printed on the fiber optic cables for better distinction. These indicate the beam direction of the light.



7.3.3 Fiber Optic Cable Coupling

Coupling

Description	The MOST fiber optic cable can be connected to other HFBR connectors with the included HFBR coupling. For this, the fiber ends are just stuck into the couplings. To release the connection, just pull out the connectors.
Part number	22042



7.4 FlexRay

7.4.1 FRcable Set

Description	Cable set for FlexRay incl.: ▶ 1x FRcable A ▶ 1x FRcable AB ▶ 2x FRterm
Temp. range	Fixed installation: -20 °C ...+60 °C Flexible use: 0 °C ...+50 °C
Min. bending radius	Fixed installation: 20 mm
Part number	05062

7.4.2 FRcable A

Description	Cable for connection of a FlexRay Interface to the FlexRay bus (Channel A)
Length	1 m
Connectors	2x D-SUB9 connectors (female)
Temp. range	Fixed installation: -20 °C ...+60 °C Flexible use: 0 °C ...+50 °C
Min. bending radius	Fixed installation: 20 mm
Properties	Provides only channel A at the FlexRay interface
Part number	Included in FRcable Set (part number 05062)

Setup

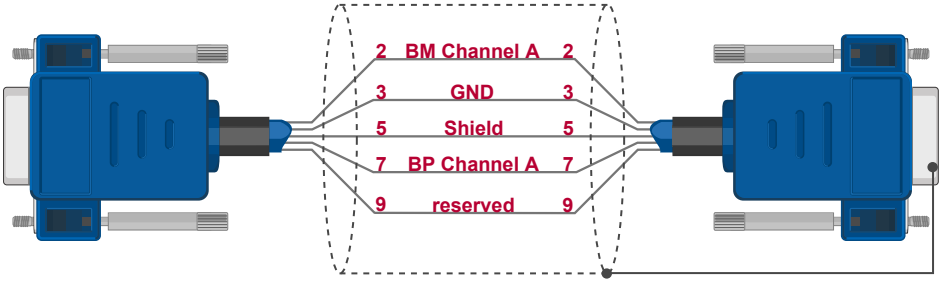

7.4.3 FRcable AB

Description	Cable for connection of a FlexRay Interface to the FlexRay bus (Channel A and B)
Length	1 m
Connectors	3x D-SUB9 connectors (female)
Temp. range	Fixed installation: -20 °C ...+60 °C Flexible use: 0 °C ...+50 °C
Min. bending radius	Fixed installation: 20 mm
Properties	Provides channel A and B at the FlexRay interface. The pin assignment of both single ended connectors is identical and suitable for replacement of an existing FlexCard configuration.
Part number	Included in FRcable Set (part number 05062)

Setup

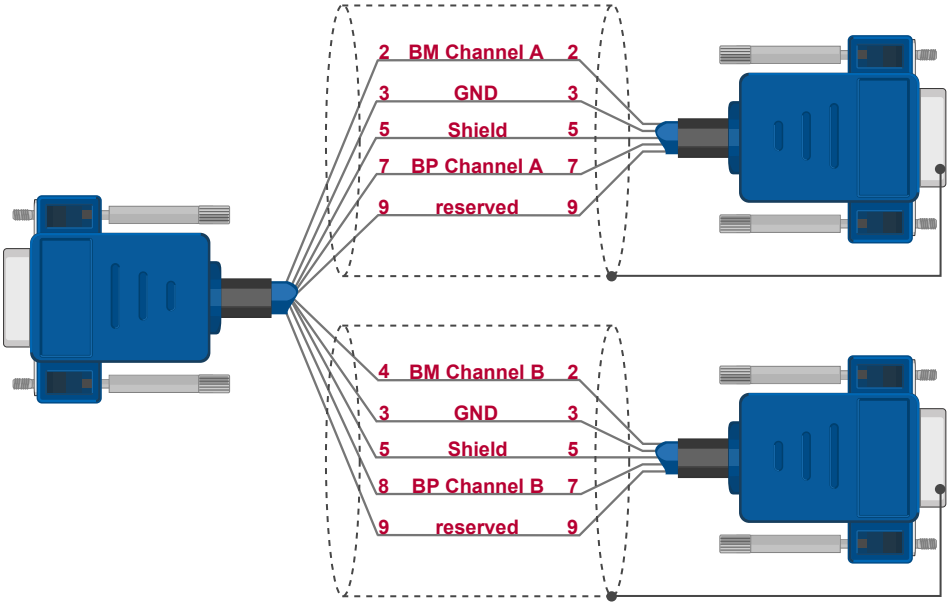

7.4.4 FRterm

Description	FlexRay adapter for termination of a FlexRay cluster (channel A and B). Pin assignment suited for VN3300/VN3600/VN7600/VN8970.
Connectors	1x D-SUB9 connector (female) 1x D-SUB9 connector (male)
Properties	2x 100 Ohm terminating resistor
Part number	05057

Setup

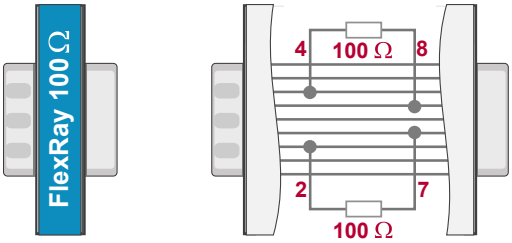

7.4.5 FR/CANcable 2Y

Y cable

Description	Y cable for Vector FR/CAN interfaces with D-SUB9 double assignment (e. g. VN7610). Splits the double assignment into two separate D-SUB9 connectors.
Length	0.3 m
Connectors	1x female D-SUB9 connector 2x male D-SUB9 connectors
Temp. range	Fixed installation: -20 °C ...+60 °C Flexible use: 0 °C ...+50 °C
Min. bending radius	Fixed installation: 20 mm
Part number	05099

Setup

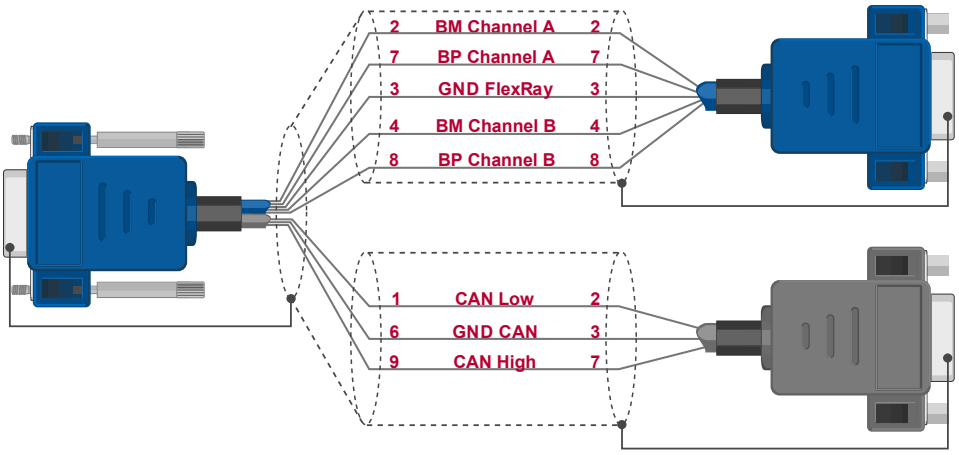

7.5 OBDcables

7.5.1 OBDcable CAN

Connection cable

Description	OBD-II to D-SUB9 cable for CAN High-Speed
Length	2 m
Connectors	1x 16-pin OBD-II connector (male), type A (12 V) 1x D-SUB9 (female)
Temp. range	Fixed installation: -20 °C ...+80 °C Flexible use: -5 °C ...+50 °C
Min. bending radius	Fixed installation: 63.0 mm Flexible use: 94.5 mm
Part number	22089

Setup

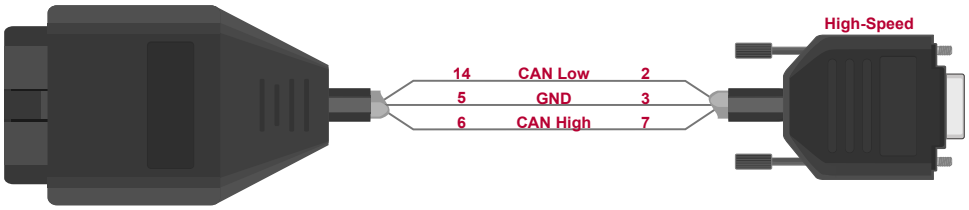

7.5.2 OBDcable OEM GM

Connection cable

Description	OBD-II to D-SUB9 cable (GM specific layout)
Length	2 m
Connectors	1x 16-pin OBD-II connector (male), type A (12 V) 2x D-SUB9 (female)
Part number	22247

Setup

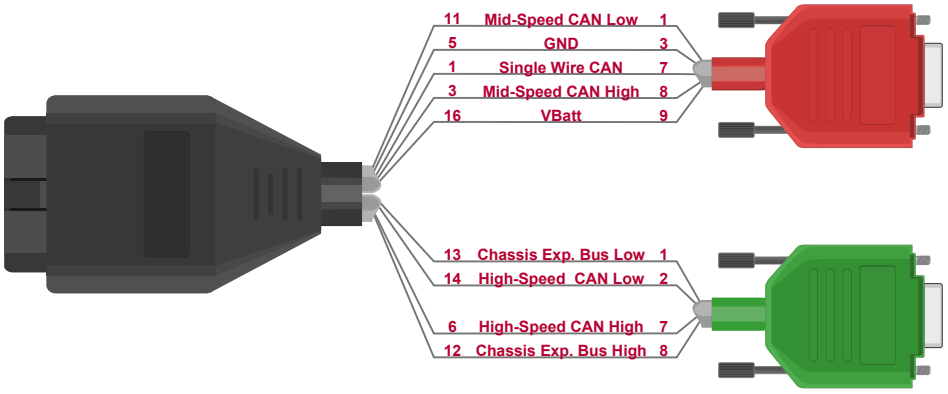

Example of usage

The OBDcable OEM GM is designed for usage with VN1630/VN1630A. Please use the following Piggyback configuration:

- CH1: Single Wire CAN, e. g. CANpiggy 7356cap
- CH2: CAN High-Speed, e. g. CANpiggy 1051cap

Connect the ODBcable OEM GM as follows:

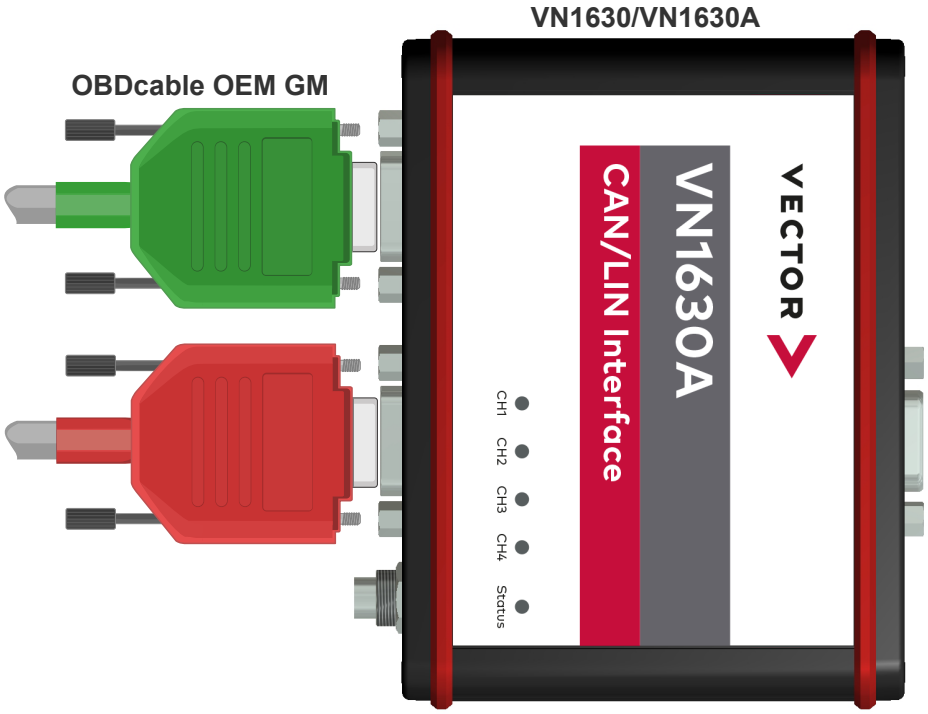

7.5.3 OBDcable OEM01

Connection cable

Description	OBD-II to D-SUB9 cable (for BMS, HS, IMS)
Length	2 m
Connectors	1x 16-pin OBD-II connector (male), type A (12 V) 3x D-SUB9 (female)
Temp. range	Fixed installation: -20 °C ...+80 °C Flexible use: -5 °C ...+70 °C
Min. bending radius	Fixed installation: 24.4 mm Flexible use: 61.0 mm
Part number	22071

Setup

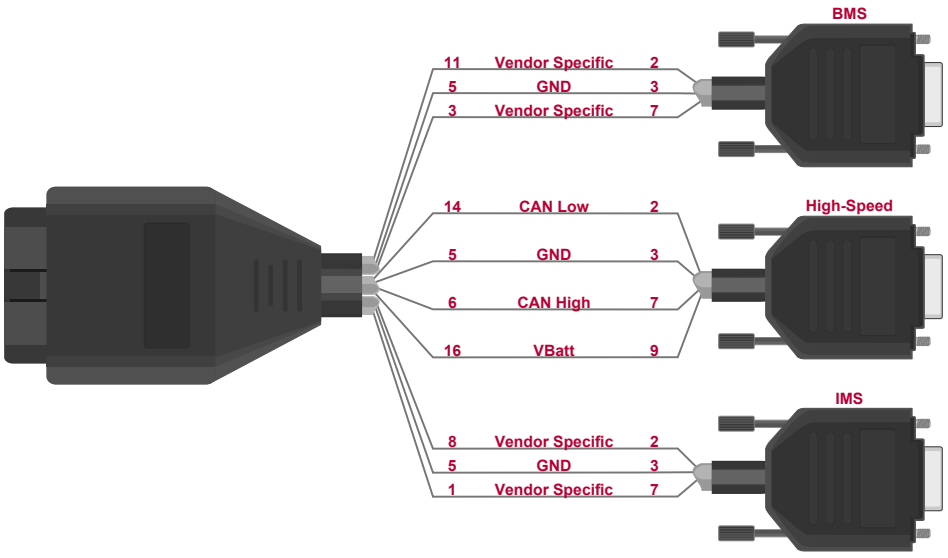

7.5.4 OBDcable VN88

Connection cable

Description	OBD-II to ODU cable for VN8810
Length	1 m (overall length)
Connectors	1x 16-pin OBD-II connector (male), type B (24 V) 1x 22-pin ODU connector (male)
Temp. range	-40 °C ... +85 °C
Min. bending radius	repeated: 10.9 cm (10 x Ø) single: 5.45 cm (5 x Ø)
Part number	05106



OBD-II Pin	Assignment
1/2	Not connected
3	100BaseT RX+
4	Chassis GND
5	Signal GND (LIN / K-Line)
6	CAN High-Speed High
7	LIN/K-Line Data
8	DoIP Activation Line
9/10	Not connected
11	100BaseT RX-
12	100BaseT TX+
13	100BaseT TX-
14	CAN High-Speed Low
15	Not connected
16	VBatt, permanent positive voltage, supply voltage for VN8810

Note
The pin assignment of the OBD-II connector is according to option #1 ISO/DIS 13400-4:2015-07.

Caution!
The power supply port does not have any overload protection. Whenever the device is powered through this cable, a fuse (slow-acting) must be provided in the supply line.

7.5.5 OBDcable VN88A

Connection cable

Description	OBD-II to ODU cable for VN8810
Length	3 m (overall length)
Connectors	1x 16-pin OBD-II connector (male), type B (24 V) 1x 22-pin ODU connector (male)
Temp. range	-40 °C ... +85 °C
Min. bending radius	repeated: 10.9 cm (10 x Ø) single: 5.45 cm (5 x Ø)
Part number	05105



OBD-II Pin	Assignment
1/2	Not connected
3	100BaseT RX+
4	Chassis GND
5	Signal GND (LIN / K-Line)
6	CAN High-Speed High
7	LIN/K-Line Data
8	DoIP Activation Line
9/10	Not connected
11	100BaseT RX-
12	100BaseT TX+
13	100BaseT TX-
14	CAN High-Speed Low
15	Not connected
16	VBatt, permanent positive voltage, supply voltage for VN8810

Note
The pin assignment of the OBD-II connector is according to option #1 ISO/DIS 13400-4:2015-07.

Caution!
The power supply port does not have any overload protection. Whenever the device is powered through this cable, a fuse (slow-acting) must be provided in the supply line.

7.5.6 OBDcable DoIP/CAN B1

Connection cable

Description	OBD-II to DoIP and CAN for VX0312
Length	Approx. 1.2 m (overall length)
Connectors	1x 16-pin OBD-II connector (male), type B (24 V) 1x 2-pin LEMO connector (male) 1x RJ45
Temp. range	Fixed installation: -40 °C ... +80 °C Flexible use: -30 °C ... +80 °C
Min. bending radius	repeated: 8 cm (8 x 10mm +/-0.2) single: 4 cm (4 x 10mm +/-0.2)
Part number	22547



Pin assignments

OBD-II	RJ45	LEMO	Assignment
1/2	-	-	Not connected
3	3	-	100BaseT RX+
4	-	-	Chassis GND
5	-	Housing	Signal GND (CAN, DoIP activation line)
6	-	1	CAN High-Speed High
7	-	-	LIN/K-Line Data (not used)
8	-	-	DoIP Activation Line (connected via resistor to OBD-II pin 16)
9/10	-	-	Not connected
11	6	-	100BaseT RX-
12	1	-	100BaseT TX+
13	2	-	100BaseT TX-
14	-	2	CAN High-Speed Low
15	-	-	Not connected
16	-	-	VBatt, permanent positive voltage (connected via resistor to OBD-II pin 8)

Note
The pin assignment of the OBD-II connector is according to option #1 ISO/DIS 13400-4:2015-07.

Note
Please note that pin 8 and 16 of the OBDcable are connected via a resistor. Connecting the cable to the vehicle will wake up the diagnostic gateway which may be in sleep mode.

7.6 Miscellaneous

7.6.1 Cable Binder 3pol Connector with Pigtail

All-purpose cable

Description	Connection cable for time synchronization at Vector devices
Length	1.5 m
Connectors	1x female 3-pin Binder connector (type 711) 3x stripped wires
Temp. range	Fixed installation: -25 °C ...+70 °C Flexible use: -5 °C ...+70 °C
Min. bending radius	Fixed installation: 16.8 mm Flexible use: 42.0 mm
Part number	30011



Setup

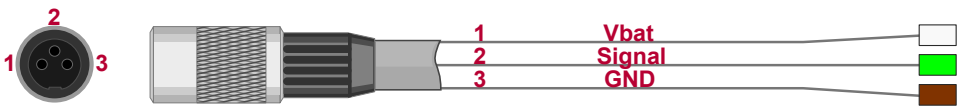

Caution!
The power supply port does not have any overload protection. Whenever the device is powered through this cable, a fuse (slow-acting) must be provided in the supply line.

7.6.2 Power Sync Cable 2xBinder <> Banana Plugs

Power cable

Description	Power cable for Vector devices with hardware synchronozation capability (requires Vector devices with hardware synchronization support)
Length	1.5 m
Connectors	2x female 3-pin Binder connector (type 711) 2x banana plugs (4 mm)
Part number	05123

Setup

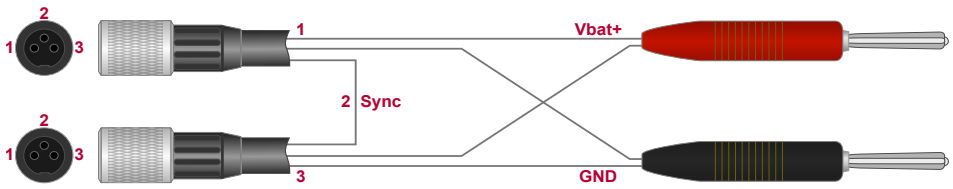

Caution!
The power supply port does not have any overload protection. Whenever the device is powered through this cable, a fuse (slow-acting) must be provided in the supply line.

7.6.3 Breakout Box D62Y9

Breakout box

Description	Breakout box for VN7570 and VN7572 (requires VNcable DSUB62 or VNcable DSUB62 A)
Dimensions	165 mm x 52 mm x 69 mm (W x H x D), incl. rubber feet and connectors
Weight	580 g
Connectors	1x D-SUB62 (female) 8x D-SUB9 (male) 1x D-SUB15 (female)
Properties	Can be mounted with 4x M4 screws
Part number	05090



CH1...CH8

Assignment for Piggybacks					Assignment for On-board CAN				
D-SUB62				D-SUB9	D-SUB62				D-SUB9
CH1	CH2	CH3	CH4	CH1…CH4	CH5	CH6	CH7	CH8	CH5…CH8
45	47	50	53	(1)*	-	-	-	-	(1) N.C.
22	3	28	9	(2)*	12	13	14	15	(2) CAN Low
1	25	7	31	(3)*	54	55	56	57	(3) GND
23	4	29	10	(4)*	-	-	-	-	(4) N.C.
6	6	6	6	(5)*	6	6	6	6	(5) Shield
2	26	8	32	(6)*	-	-	-	-	(6) N.C.
24	5	30	11	(7)*	33	34	35	36	(7) CAN High
43	27	48	51	(8)*	-	-	-	-	(8) N.C.
44	46	49	52	(9)*	-	-	-	-	(9) N.C.

* Depends on the inserted Piggyback in VN7570/VN7572.
N.C. Not connected

CH9

Assignment for IOpiggy 8642					
D-SUB62	**D-SUB15**	**Pinout 1**	**Pinout 2**	**Pinout 3**	**Pinout 4**
16	9	Digital In 1	Digital Out 1[1]	Digital Out 1[2]	-
17	10	Digital In 3	Digital Out 3[1]	Digital Out 3[2]	-
18	11	Digital In 5	Digital Out 4b[3]	-	-
19	12	Digital In 7	Digital Out 5b[3]	-	-
20	13	Digital GND			
37	1	Digital In 0	Digital Out 0[1]	Digital Out 0[2]	PWM 1
38	2	Digital In 2	Digital Out 2[1]	Digital Out 2[2]	-
39	3	Digital In 4	Digital Out 4a[3]	-	-
40	4	Digital In 6	Digital Out 5a[3]	-	-
41	5	PWM 0	Capture	-	-
58	6	Analog GND			
59	14	Analog In 0	Analog Out 0[1]	-	-
60	7	Analog In 1	Analog Out 1[1]	-	-
61	15	Analog In 2	-	-	-
62	8	Analog In 3	-	-	-

[1] Push-Pull
[2] Open-Drain
[3] a/b line: switched by PhotoMOS relais, external signal at a is switched to b.

7.6.4 VNcable DSUB62

Breakout box cable

Description	Connection cable with D-SUB62 connectors for Breakout Box D62Y9, VN7570 and VN7572
Length	0.5 m (cable only) 0.6 m (overall length)
Connectors	1x D-SUB62 (male) 1x D-SUB62 (female)
Temp. range	-20 °C ...+80 °C
Min. bending radius	Fixed installation: 40 mm Flexible use: 100 mm
Part number	05087



7.6.5 VNcable DSUB62 A

Breakout box cable

Description	Connection cable with D-SUB62 connectors for Breakout Box D62Y9, VN7570 and VN7572
Length	1.2 m (cable only) 1.3 m (overall length)
Connectors	1x D-SUB62 (male) 1x D-SUB62 (female)
Temp. range	-20 °C ...+80 °C
Min. bending radius	Fixed installation: 40 mm Flexible use: 100 mm
Part number	05093



7.6.6 VNcable DSUB62 B

Connection cable

Description	Connection cable with D-SUB62 connector and open end
Length	2 m (overall length)
Connectors	1x D-SUB62 (female) 62x wires
Temp. range	-20 °C ...+80 °C
Min. bending radius	Fixed installation: 40 mm Flexible use: 100 mm
Part number	05095



Pin assignment

	Pin	Color		Pin	Color
TP	1 44	dark brown brown-white	TP	19 40	grey grey-black
TP	2 45	red red-black	TP	20 41	grey-red blue-grey
TP	3 5	red-white red-blue	TP	22 24	grey-yellow grey-green
TP	4 27	orange orange-black	TP	23 43	white white-black
TP	6 62	red-orange orange-green	TP	25 46	white-red white-light blue
TP	7 49	orange-white grey-white	TP	26 47	yellow-white white-light green
TP	8 50	yellow yellow-black	TP	28 30	pink pink-black
TP	9 11	red-yellow yellow-blue	TP	29 48	pink-red pink-blue
TP	10 51	yellow-white light yellow-black	TP	31 52	pink-white pink-yellow
TP	12 33	green green-black	TP	32 53	light green light green-black
TP	13 34	green-white light green-blue	TP	54 55	light green-yellow light green-green
TP	14 35	green-blue light green-red	TP	56 57	light blue light blue-black
TP	15 36	blue blue-white	TP	58 59	light blue-red light blue-blue
TP	16 37	blue-red violet-red	TP	60 61	light blue-yellow light blue-green
TP	17 38	violet violet-white		21 42	not connected not connected
TP	18 39	violet-green violet-blue			

TP = twisted pair

7.6.7 VNcable D62Y9

Y cable

Description	Adapter cable for VN7570 and VN7572
Length	approx. 0.5 m (overall length) approx. 0.4 m without connectors
Connectors	1x D-SUB62 (female) 1x D-SUB15 (female) 8x D-SUB9 (male)
Part number	05088



CH1...CH8

Assignment for Piggybacks					Assignment for On-board CAN				
D-SUB62				D-SUB9	D-SUB62				D-SUB9
CH1	CH2	CH3	CH4	CH1…CH4	CH5	CH6	CH7	CH8	CH5…CH8
45	47	50	53	(1)*	-	-	-	-	(1) N.C.
22	3	28	9	(2)*	12	13	14	15	(2) CAN Low
1	25	7	31	(3)*	54	55	56	57	(3) GND
23	4	29	10	(4)*	-	-	-	-	(4) N.C.
6	6	6	6	(5)*	6	6	6	6	(5) Shield
2	26	8	32	(6)*	-	-	-	-	(6) N.C.
24	5	30	11	(7)*	33	34	35	36	(7) CAN High
43	27	48	51	(8)*	-	-	-	-	(8) N.C.
44	46	49	52	(9)*	-	-	-	-	(9) N.C.

* Depends on the inserted Piggyback in VN7570/VN7572.
N.C. Not connected

CH9

Assignment for IOpiggy 8642					
D-SUB62	**D-SUB15**	**Pinout 1**	**Pinout 2**	**Pinout 3**	**Pinout 4**
16	9	Digital In 1	Digital Out 1[1]	Digital Out 1[2]	-
17	10	Digital In 3	Digital Out 3[1]	Digital Out 3[2]	-
18	11	Digital In 5	Digital Out 4b[3]	-	-
19	12	Digital In 7	Digital Out 5b[3]	-	-
20	13	Digital GND			
37	1	Digital In 0	Digital Out 0[1]	Digital Out 0[2]	PWM 1
38	2	Digital In 2	Digital Out 2[1]	Digital Out 2[2]	-
39	3	Digital In 4	Digital Out 4a[3]	-	-

CH9

Assignment for IOpiggy 8642					
D-SUB62	**D-SUB15**	**Pinout 1**	**Pinout 2**	**Pinout 3**	**Pinout 4**
40	4	Digital In 6	Digital Out 5a[3]	-	-
41	5	PWM 0	Capture	-	-
58	6	Analog GND			
59	14	Analog In 0	Analog Out 0[1]	-	-
60	7	Analog In 1	Analog Out 1[1]	-	-
61	15	Analog In 2	-	-	-
62	8	Analog In 3	-	-	-

[1] Push-Pull
[2] Open-Drain
[3] a/b line: switched by PhotoMOS relais, external signal at a is switched to b.

7.6.8 VNcable DSUB37

Connection cable

Description	Connection cable with D-SUB37 connectors
Length	1.5 m
Connectors	1x D-SUB37 (male) 1x D-SUB37 (female)
Part number	05097



7.6.9 VNcable 3Y

Y cable

Description	Y cable for Vector FlexRay/CAN/LIN interfaces with D-SUB15HD triple assignment. Splits a D-SUB15HD connector into three separate D-SUB9 connectors (CH A, CH B, CH C). Example: ► **VN1530** - CH1/2/3 → Channel 1 (CH A), 2 (CH B) and 3 (CH C) - CH4/5/6 → Channel 4 (CH A), 5 (CH B) and 6 (CH C) The pin assignments of the D-SUB9 connectors CH A, CH B and CH C depend on the used bus transceivers inside the interface (see section D-SUB Pin Assignment on page 61).
Length	0.3 m
Connectors	1x female D-SUB15HD connector 3x male D-SUB9 connectors
Part number	05122



Channel	Pin D-SUB9	Pin D-SUB15HD
A	2	14
	3	10
	7	15
	9	5
B	2	3
	3	9
	7	4
	9	13
C	1	2
	2	1
	3	7
	4	11
	7	6
	8	12
	9	8

7.6.10 Terminal Block DSUB37

Terminal block

Description	Terminal block with 37 CAGE CLAMP® connectors to D-SUB37 (requires VNcable DSUB37)
Dimensions	102 mm x 34 mm x 85 mm
Weight	102 g
Connectors	1x row with 19 CAGE CLAMP® connectors 1x row with 18 CAGE CLAMP® connectors 1x D-SUB37 (female)
Part number	05098

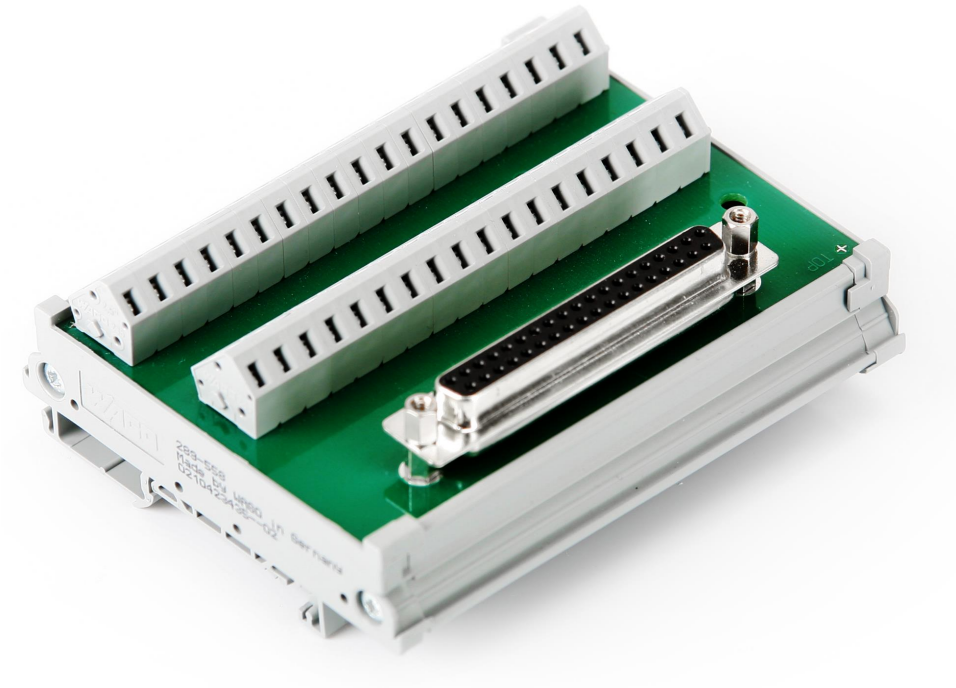

7.6.11 Breakout Box VN88

Breakout box

Description	Breakout box for VN8810
Dimensions	Approx. 290 mm x 112 mm x 45 mm (LxWxH)
Temp. range	-40 °C ... +85 °C
Connectors	2x D-SUB9 (male) 1x D-SUB9 (female) 1x 22-pin ODU connector (male) 1x 2-pin ODU connector (male)
Part number	05107



CAN connector

Pin	Assignment
1, 4, 5, 6, 8, 9	Not connected
2	CAN High-Speed Low
3	CAN GND
7	CAN High-Speed High

LIN connector

Pin	Assignment
1, 2, 4, 5, 6, 8	Not connected
3	LIN GND
7	LIN / K-Line
9	VBatt LIN

Note
LIN requires an external supply voltage of 5 V…36 V DC at pin 9 (VBatt LIN) and pin 3 (LIN GND).

DoIP Act. Line connector

Pin	Assignment
1...6, 8	Not connected
7	DoIP Activation Line
9	GND (of external power supply at ODU connector)

7.6.12 VX1362B CAN Cable LEMO/Banana Plugs 1.5M

Connection cable

Description	Adapter cable for Vector devices
Length	1.5 m
Connectors	1x LEMO connector 2x banana plugs (4 mm)
Part number	22258



Setup

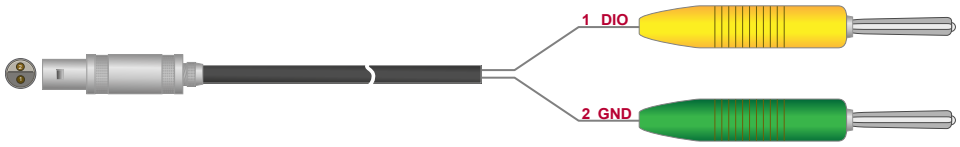

7.6.13 Fibre Wire 10 m for CANcab 251fiber

Connection cable

Description	Optical fiber cable (two lines)
Length	10 m
Part number	22057



7.6.14 Fibre Wire 25 m for CANcab 251fiber

Connection cable

Description	Optical fiber cable (two lines)
Length	25 m
Part number	22053

7.6.15 Fibre Wire 50 m for CANcab 251fiber

Connection cable

Description	Optical fiber cable (two lines)
Length	50 m
Part number	22054

7.6.16 USB Cables

7.6.16.1 USB Cable 2.0

Technical data

Description	Standard USB 2.0 cable
Length	approx. 1.8 m
Connectors	1x connector type A 1x connector type B
Part number	05011



7.6.16.2 USB Cable 3.0 (A-B, 1.8m)

Technical data

Description	Standard USB 3.0 cable
Length	approx. 1.8 m
Connectors	1x connector type A 1x connector type B
Part number	05092



7.6.16.3 USB Cable 3.1 Type A-C (Dual Screw Lock)

Technical data

Description	USB 3.1 cable
Length	approx. 1.8 m
Connectors	1x connector type A 1x connector type C with screws
Part number	05140



7.6.16.4 USB Cable 3.1 Type C-C (Dual Screw Lock)

Technical data

Description	USB 3.1 cable
Length	approx. 1.8 m
Connectors	1x connector type C 1x connector type C with screws
Part number	05141



7.6.16.5 USB Cable 3.0 (Type B Conn. with Screws)

Technical data

Description	USB 3.0 cable
Length	approx. 1.8 m
Connectors	1x connector type A 1x connector type B (with screws)
Part number	05113



8 Power Supply

In this chapter you find the following information:

8.1 Vector Power Supply Units 164
8.1.1 Vector Power Supply 12V/1.5A 164
8.1.2 Vector Power Supply 12V/2.5A 164
8.1.3 Vector Power Supply ODU Mini-Snap 165
8.2 On-Board Power Supply 166
8.2.1 Car Power Supply Cable 12V with Binder 166
8.2.2 Cable Vehicle Input <> ODU Mini-Snap 166
8.3 Power Supply Cable 167
8.3.1 Cable Banana Plug <> Binder 3-pin 167
8.3.2 Cable Banana Plug <> ODU Mini-Snap 168
8.3.3 Power Adapter OBDII – ODU Mini Snap 168

8.1 Vector Power Supply Units

8.1.1 Vector Power Supply 12V/1.5A

Power supply unit for Vector devices

Description	Power supply unit with 12 V and 1.5 A, with changeable adapters for USA and Europe (GB adapter on request)
Length	2 m
Connectors	1x adapter for USA 1x adapter for Europe 1x 3-pin Binder connector (type 711)
Part number	05024



8.1.2 Vector Power Supply 12V/2.5A

Power supply unit for Vector devices

Description	Power supply unit with 12 V and 2.5 A, with changeable adapters for USA and Europe (GB adapter on request)
Length	2 m
Connectors	1x adapter for USA 1x adapter for Europe 1x 5-pin Binder connector (type 711)
Part number	05020



8.1.3 Vector Power Supply ODU Mini-Snap

Power supply unit for Vector devices

Description	Power supply unit with 24 V and 2.5 A
Connectors	1x Connector for Europe 1x ODU S11L0C-P02NPL0-5200
Part number	05068



Connection cable

Description	Connection cable for power supply unit (part number 05068)
Connectors	Connector for USA/Japan
Part number	05071



Connection cable

Description	Connection cable for power supply unit (part number 05068)
Connectors	Connector for UK
Part number	05070



8.2 On-Board Power Supply

8.2.1 Car Power Supply Cable 12V with Binder

On-board power supply

Description	On-board power supply cable
Connectors	1x 3-pin connector (Binder type 711) 1x 12 V plug (DIN ISO 4165)
Temp. range	Fixed installation: -20 °C ...+70 °C Flexible use: -20 °C ...+70 °C
Part number	15023



8.2.2 Cable Vehicle Input <> ODU Mini-Snap

On-board power supply for VN8900

Description	On-board power supply cable for the VN8900 interface family
Connectors	1x ODU S11L0C-P02NPL0-5200 1x 12 V plug (DIN ISO 4165)
Temp. range	Fixed installation: -20 °C ...+70 °C Flexible use: -20 °C ...+70 °C
Part number	05076



8.3 Power Supply Cable

8.3.1 Cable Banana Plug <> Binder 3-pin

Power cable

Description	Power cable for Vector devices
Length	1.5 m
Connectors	1x female 3-pin Binder connector (type 711) 2x banana plugs (4 mm)
Temp. range	Fixed installation: -25 °C ...+70 °C Flexible use: -5 °C ...+70 °C
Min. bending radius	Fixed installation: 16.8 mm Flexible use: 42.0 mm
Part number	30012



Setup

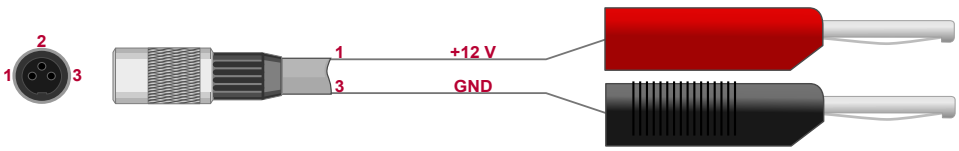

Caution!
The power supply port does not have any overload protection. Whenever the device is powered through this cable, a fuse (slow-acting) must be provided in the supply line.

8.3.2 Cable Banana Plug <> ODU Mini-Snap

ODU

Description	Power cord for Vector devices with ODU MINI-SNAP connector
Length	approx. 2 m
Connectors	1x ODU connector (type S11L0C-P02NPL0-6200) 2x bunch plugs (power supply)
Temp. range	Fixed installation: -25 °C ...+75 °C Flexible use: -25 °C ...+75 °C
Min. bending radius	Fixed installation: 15.6 mm Flexible use: 26.0 mm
Part number	05069

Cable setup



Caution!
The power supply port does not have any overload protection. Whenever the device is powered through this cable, a fuse (slow-acting) must be provided in the supply line.

8.3.3 Power Adapter OBDII – ODU Mini Snap

Connection cable

Description	OBD-II/ODU power supply cable for VN8810 (this cable requires OBDcable VN88 or OBDcable VN88A)
Length	approx. 30 cm (overall length)
Connectors	1x 16-pin OBD-II connector (female), Type B (24 V) 1x 2-pin ODU connector (male)
Part number	05104



OBD-II Pin	Assignment	ODU Pin
16	VBatt	1
4	Chassis GND	2

Example of usage

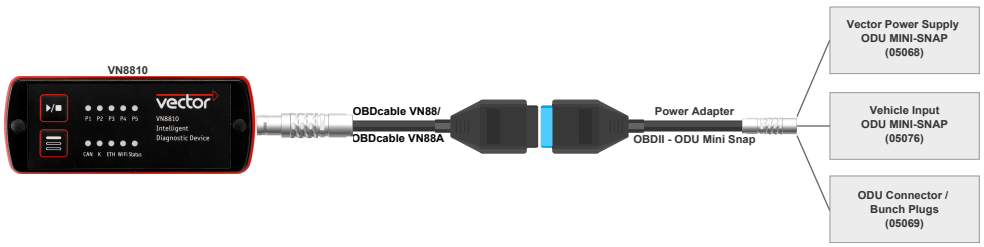

9 Time Synchronization

In this chapter you find the following information:

9.1 Time Synchronization 170
9.1.1 General Information 170
9.1.2 Software Sync 172
9.1.3 Hardware Sync 173

9.2 SYNCcables 175
9.2.1 Vector SYNCcableXL 175
9.2.2 Vector SYNCcable50 176

9.3 SYNCboxes 177
9.3.1 Multi SYNCbox External 177
9.3.2 Multi SYNCbox Internal 178
9.3.3 Multi SYNCbox Active 179
9.3.4 SyncBox XL 180

9.1 Time Synchronization

9.1.1 General Information

Time stamps and events

Time stamps are useful when analyzing incoming or outgoing data or event sequences on a specific bus.

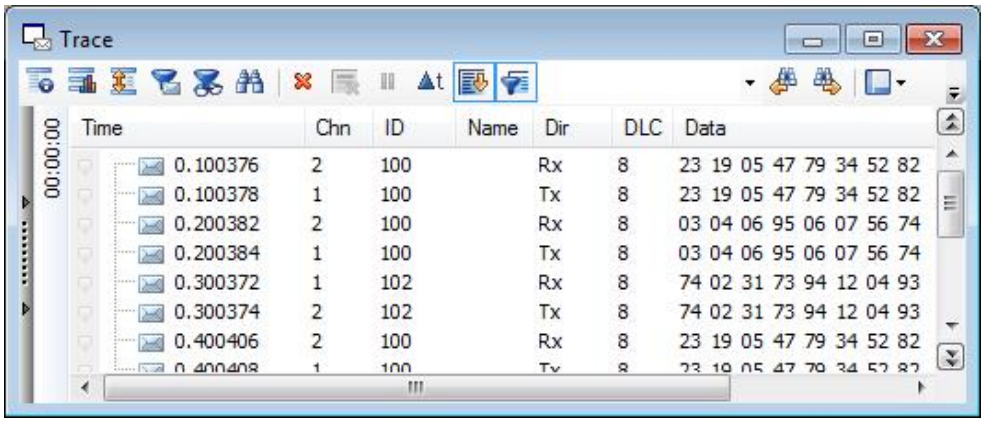

Figure 34: Time stamps of two CAN channels in CANalyzer

Generating time stamps

Each event which is sent or received by a Vector network interface has an accurate time stamp. Time stamps are generated for each channel in the Vector network interface. The base for these time stamps is a common hardware clock in the device.

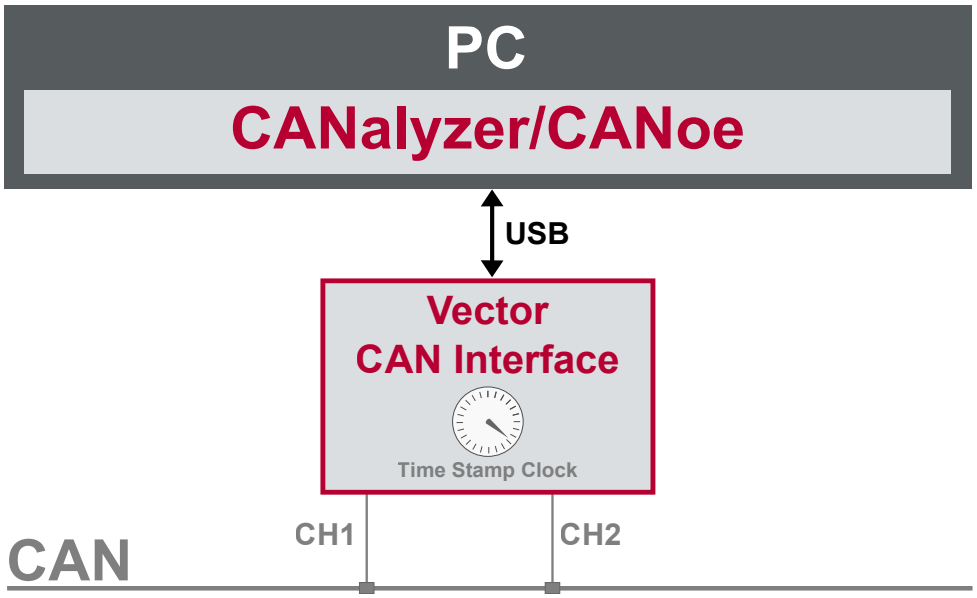

Figure 35: Common time stamp clock for each channel

If the measurement setup requires more than one Vector network interface, a synchronization of all connected interfaces and their hardware clocks is needed.

Due to manufacturing and temperature tolerances, the hardware clocks may vary in speed, so time stamps of various Vector devices drift over time.

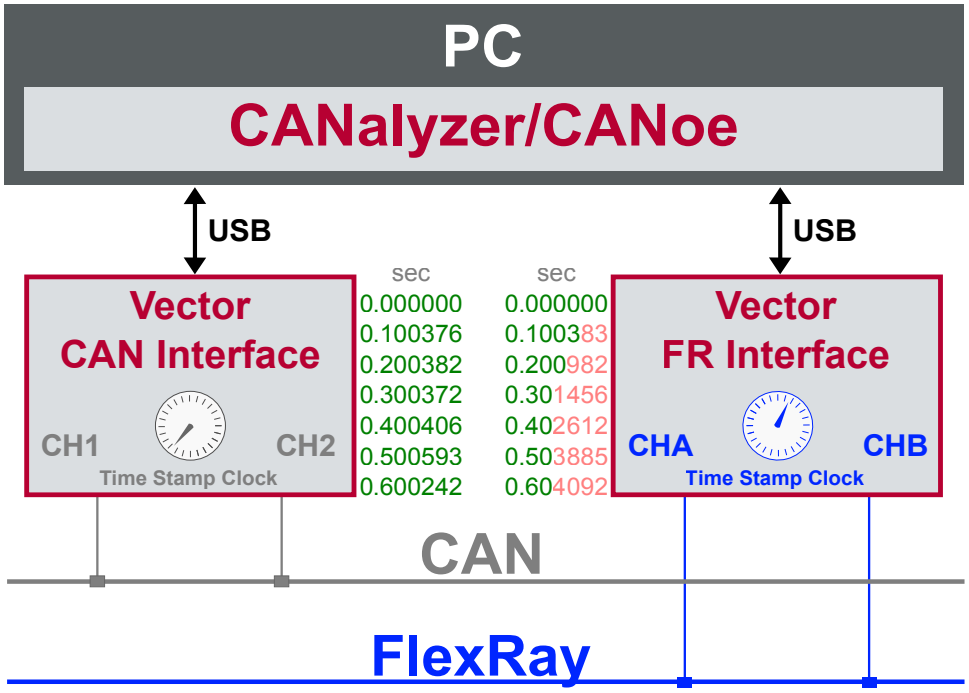

Figure 36: Example of unsynchronized network interfaces. Independent time stamps drift apart

To compensate for these time stamp deviations between the Vector network interfaces, the time stamps can be either synchronized by software or by hardware (see next section).

Note
The accuracy of the software and hardware sync depends on the interface. Further information on specific values can be found in the technical data of the respective devices.

9.1.2 Software Sync

Synchronization by software

The software time synchronization is driver-based and available for all applications without any restrictions. The time stamp deviations from different Vector network interfaces are calculated and synchronized to the common PC clock. For this purpose no further hardware setup is required.

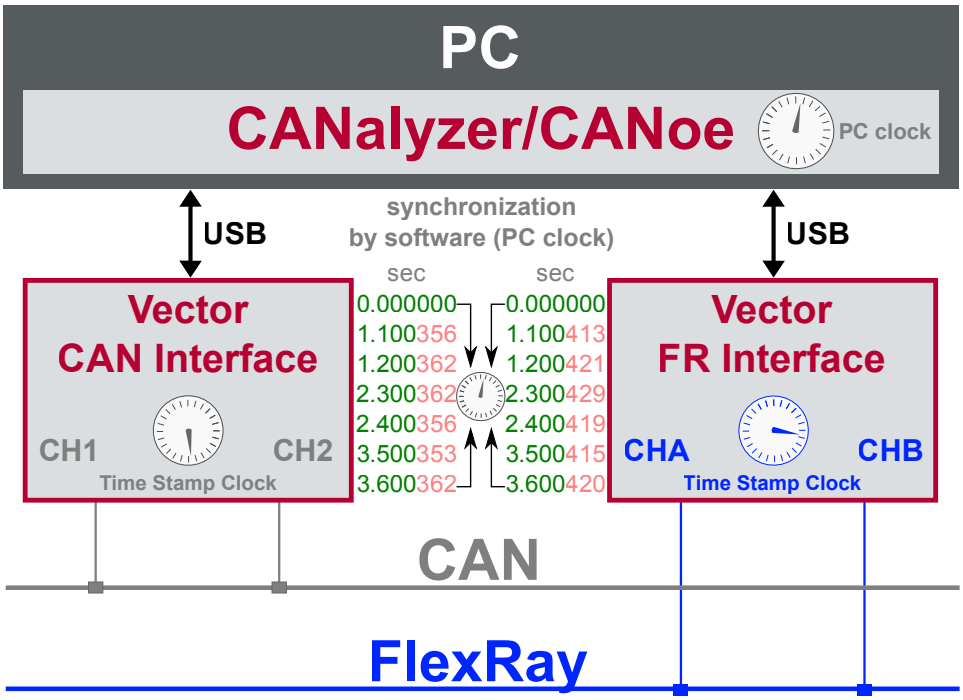

Figure 37: Time stamps of devices are synchronized to the PC clock

The setting of the software time synchronization can be changed in the **Vector Hardware Config** tool in **General information | Settings | Software time synchronization**.

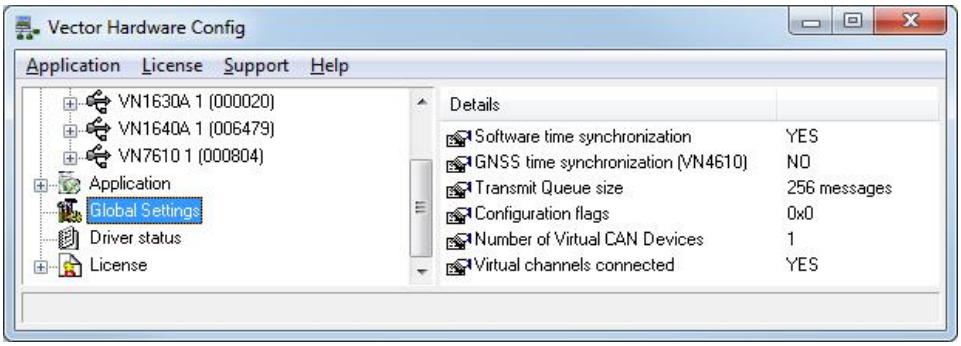

Figure 38: Switching on the software synchronization

- **YES**
  The software time synchronization is active.
- **NO**
  The software time synchronization is not active. Use this setting only if the Vector network interfaces are being synchronized over the sync line or if only a single device is used.

9.1.3 Hardware Sync

Synchronization by hardware

A more accurate time synchronization of multiple devices is provided by the hardware synchronization which has to be supported by the application (e. g. CANalyzer, CANoe). Two Vector network interfaces can therefore be connected with the SYNCcableXL (see page 175).

In order to synchronize up to five devices at the same time, a distribution box is available (see section Multi SYNCbox External on page 177 and section Multi SYNCbox Internal on page 178).

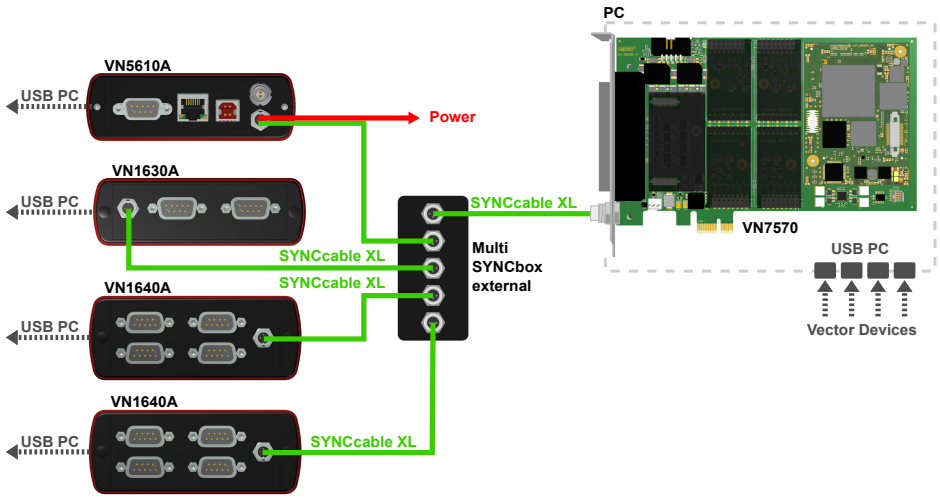

Figure 39: Example of a time synchronization with multiple devices

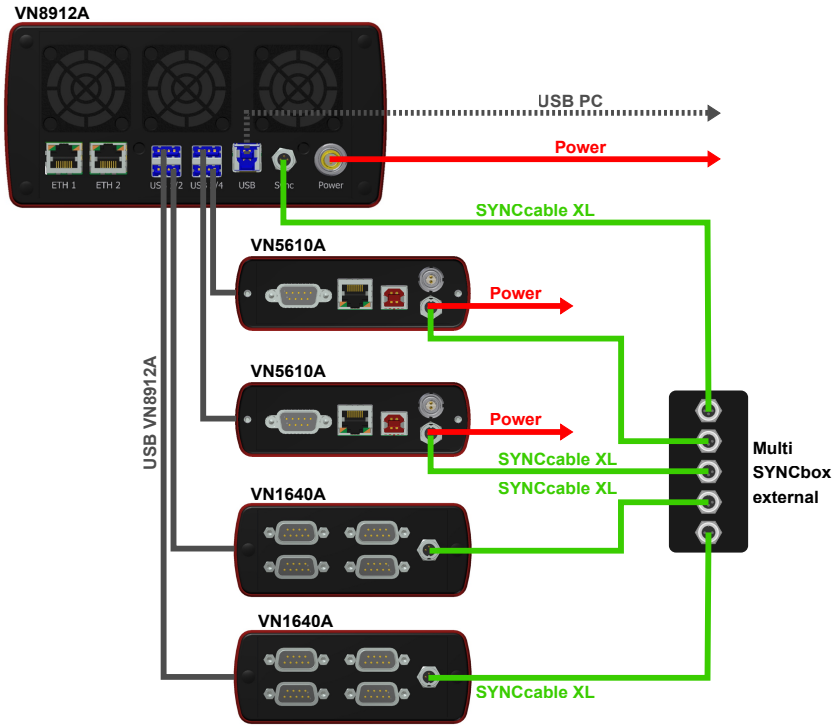

Figure 40: Example of a time synchronization with VN8912A and additional devices

At each falling edge on the sync line which is initiated by the application, the Vector

network interface generates a time stamp that is provided to the application. This allows the application to calculate the deviations between the network interfaces and to synchronize the time stamps to a common time base (master clock) which is defined by the application.

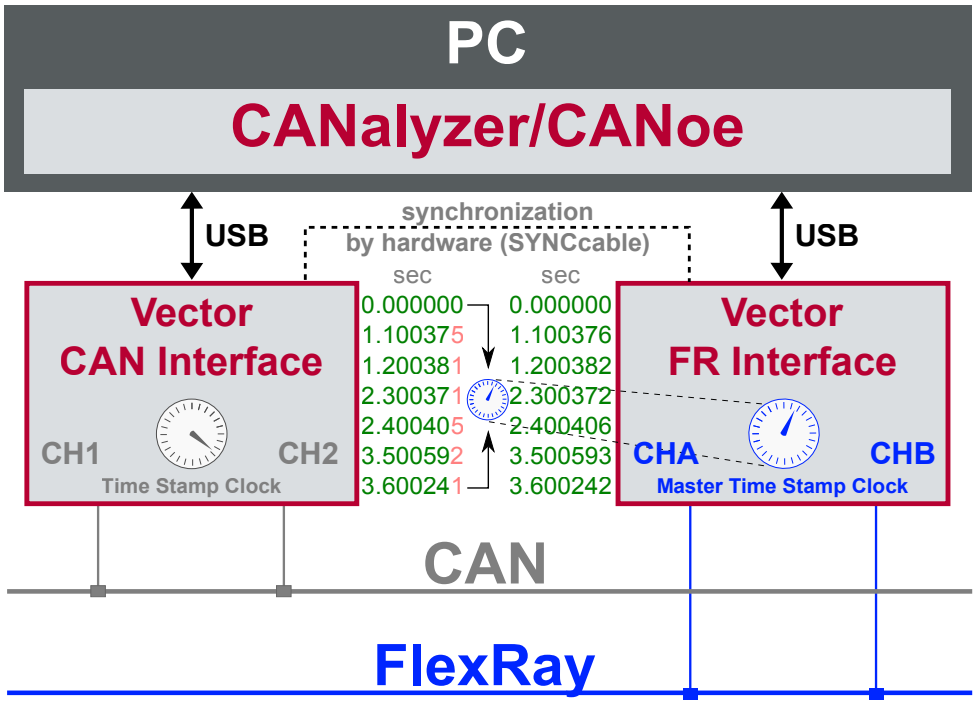

Figure 41: Time stamps are synchronized to the master clock

Note

The hardware synchronization must be supported by the application. For further information please refer to the relevant application manual. Please note that the software synchronization must be disabled (see **Vector Hardware Config | General information | Settings | Software time synchronization**) if the hardware synchronization is used.

9.2 SYNCcables

9.2.1 Vector SYNCcableXL

Synchronization cable

Description	Connection cable for time synchronization of Vector devices
Length	2 m
Connectors	2x female 3-pin Binder connectors (type 711)
Temp. range	Fixed installation: -30 °C ...+80 °C Flexible use: -5 °C ...+70 °C
Min. bending radius	Fixed installation: 16 mm Flexible use: 40 mm
Part number	05018



Setup

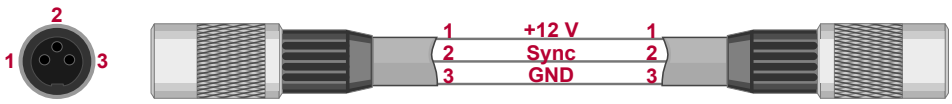

9.2.2 Vector SYNCcable50

Synchronization cable

Description	Connection cable for time synchronization for Vector devices
Length	0.5 m
Connectors	2x female 3-pin Binder connectors (type 711)
Temp. range	Fixed installation: -30 °C ...+80 °C Flexible use: -5 °C ...+70 °C
Min. bending radius	Fixed installation: 16 mm Flexible use: 40 mm
Part number	05083



Setup

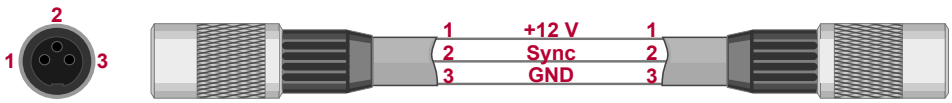

9.3 SYNCboxes

9.3.1 Multi SYNCbox External

Synchronization distributor

Description	Distributor in plastic case for time synchronization. For up to five Vector devices.
Connectors	5x male 3-pin connectors (Binder type 711)
Part number	05085



Setup

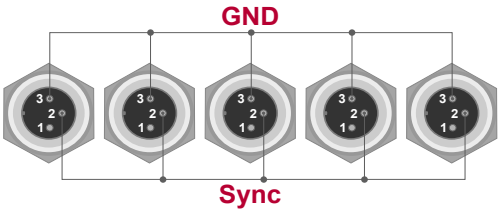

Note
Within the sync system, up to five devices can be synchronized. Cascading of multiple Multi SYNCboxes to increase the number of devices is not possible.

Example

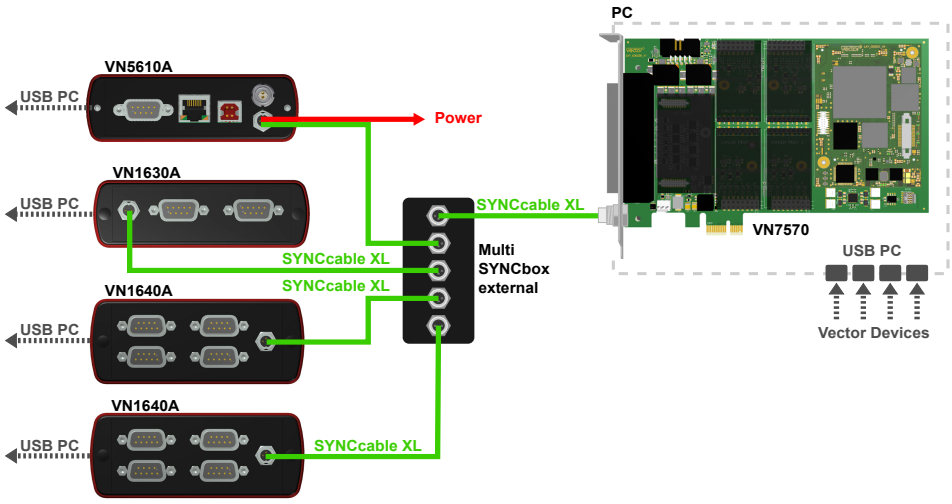

9.3.2 Multi SYNCbox Internal

Synchronization distributor

Description	Distributor in PC slot bracket for time synchronization. For up to five Vector devices.
Connectors	5x male 3-pin connectors (Binder type 711)
Part number	05084



Setup

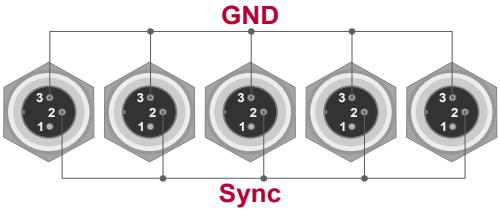

Note
Within the sync system, up to five devices can be synchronized. Cascading of multiple Multi SYNCboxes to increase the number of devices is not possible.

Example

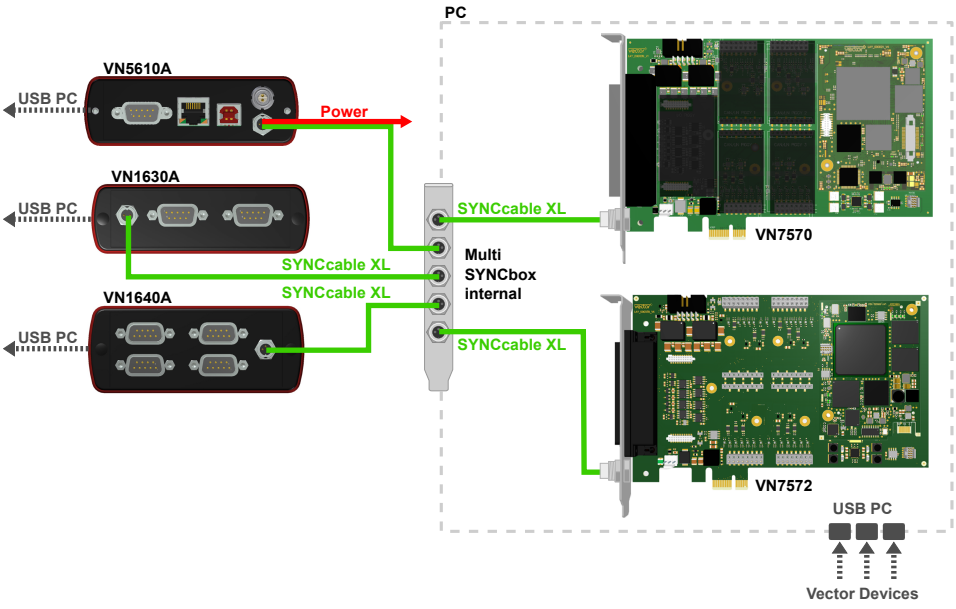

9.3.3 Multi SYNCbox Active

Synchronization distributor

Description	Active synchronization distributor in plastic case. For five or more Vector devices.
Connectors	12x male 3-pin connector (Binder type 711)
Part number	05112



SYNC in/out

Pin	Assignment
1	Not connected
2	Synchronization line
3	Ground



DC in

Pin	Assignment
1	Power supply (5 V … 60 V DC, typ. 12 V)
2	Not connected
3	Ground



Note
Cascading of multiple Multi SYNCboxes active to increase the number of SYNC out is not possible.

Example

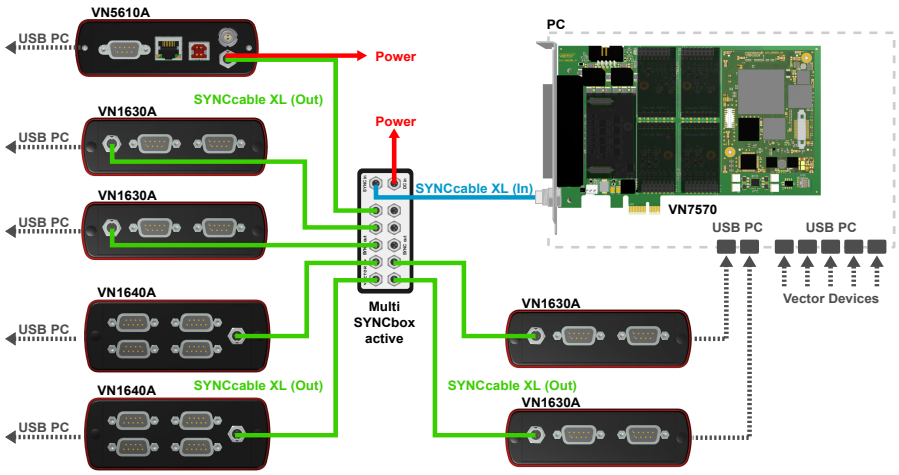

9.3.4 SyncBox XL

Synchronization of CANcardXL/XLe

The SyncBox XL is designed to synchronize multiple CANcardXL/XLe among each or with other Vector network interfaces.



Synchronization of different interfaces

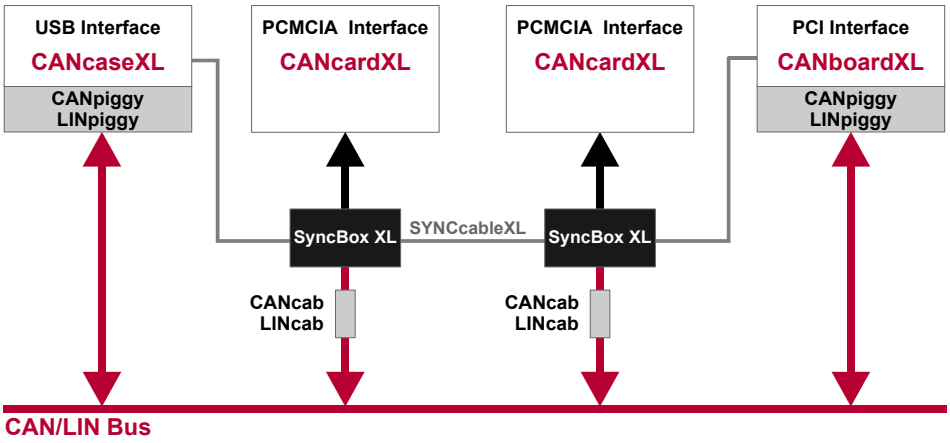

Technical data

Housing	ABS plastic
Cable length	Approx. 30 cm to CANcardXL/XLe
Weight	Approx. 100 g
Connectors	PC side: 15-pin plug connector to CANcardXL/XLe Bus side: 15-pin socket to CANcab or LINcab Sync side: 2x 3-pin Binder connectors (type 711)
Part number	22013

10 Miscellaneous

In this chapter you find the following information:

10.1 Mounting Equipment 182
10.1.1 VSH Cable Guard 216 182
10.1.2 VSH Cable Guard 216 Clip 185
10.1.3 VSH Connection Kit 19" 186
10.1.4 VSH Connection Kit Horizontal 188
10.1.5 VSH Connection Kit Vertical 189
10.1.6 VSH Equipment Foot Kit 190
10.1.7 VSH Mounting Flange Kit 191
10.1.8 Fix Kit 32mm Device 192
10.1.9 Fix Kit 42mm Device 193
10.1.10 Fix Kit Large Device 194

10.2 Antennas 195
10.2.1 2.4 & 5 GHz Antenna SMA-R Std. 195
10.2.2 2.4 & 5.2 GHz Antenna SMA-R Asia 195
10.2.3 5.9 GHz DSRC Antenna SMA 196
10.2.4 GNSS Antenna SMA 196

10.3 SD/SDHC/SDXC Memory Cards 197
10.3.1 SD Memory Card (X82) 2 GB 197
10.3.2 SDHC Memory Card (X82) 8 GB 197
10.3.3 SDHC Memory Card (X) 16 GB 197
10.3.4 SDHC Memory Card (XQI8C016Z) 32 GB 197
10.3.5 SDXC Memory Card (GXQI8C016Z) 128GB 197

10.4 CFast Card Reader USB 3.0 (external) 198

10.5 Ser2K 198

10.6 Protection 199
10.6.1 USB Protector Type 1 199
10.6.2 CANcaseXL log CardFix Kit – SD Card Protection 200
10.6.3 Front Panel for VN8900 200
10.6.4 Protection Kit 1040 201

10.1 Mounting Equipment

10.1.1 VSH Cable Guard 216

Technical data

Description	Cable support system including eight clips for clamping single cables. For cable diameters (clamping range) from Ø 3.8 mm to Ø 6.8 mm.
Part number	05149

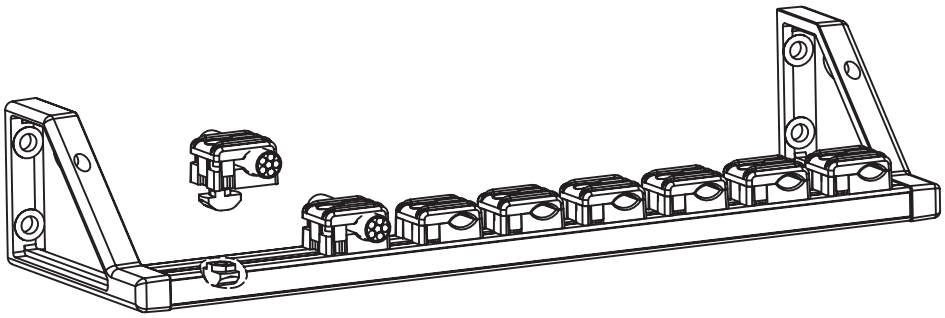

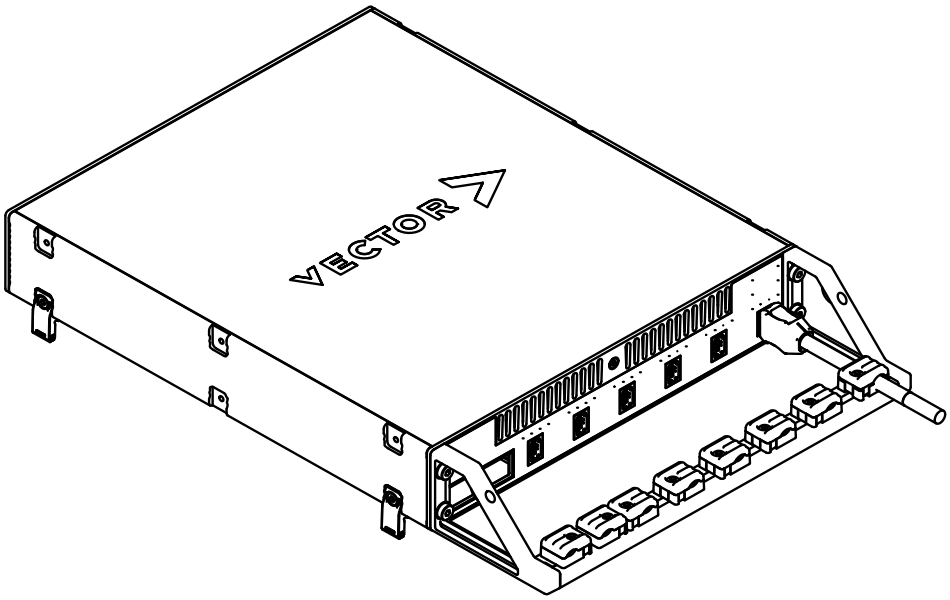

Note
The VSH Cable Guard 216 and the clips are not designed for use with VNcable 3Y.

Step by Step Procedure
The following steps describe the mounting of the VSH Cable Guard 216:

1. Insert the left frame into the cable rail and tighten the screw (Torx 8) with a torque of 1.4 Nm.

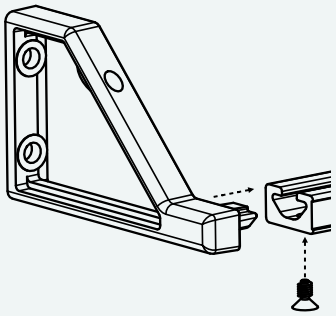

2. Repeat the steps above with the right frame.

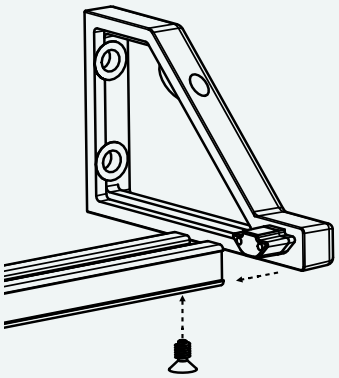

3. Attach the complete Cable Guard to the VN device and tighten it with the enclosed hexagonal screws (3 mm) and with a torque of 1.7 Nm.

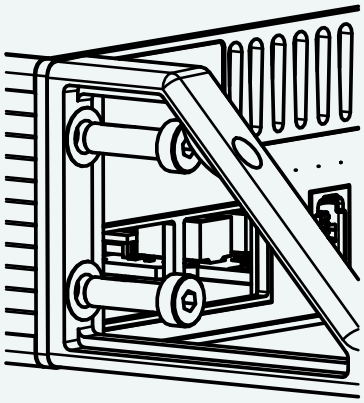

4. Repeat the steps on the other side.

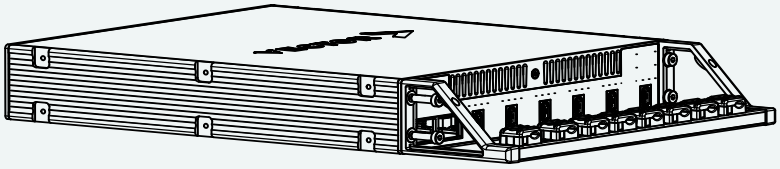

5. Lead the individual cables through the clamps and tighten the individual clamps depending on the cable (Torx 10). Tighten the screw only enough to leave a gap of 2 to 2.5 mm between the slot nut and the cable clamp.

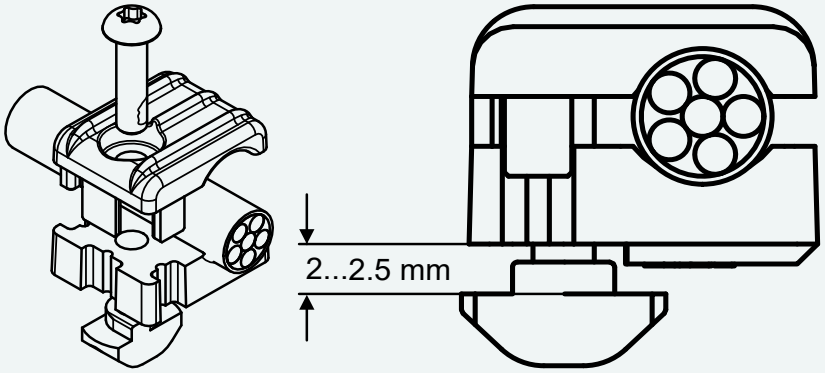

6. Now insert the individual clamps into the Cable Guard and tighten the screw completely. The slot nut will rotate 90° inside the rail and thus fix the entire clamp.

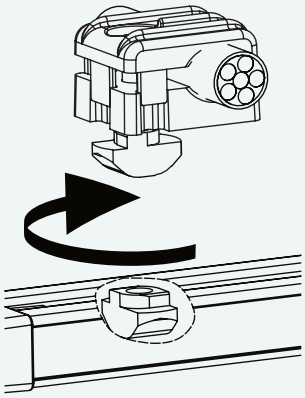

7. Repeat the steps with all other clamps.

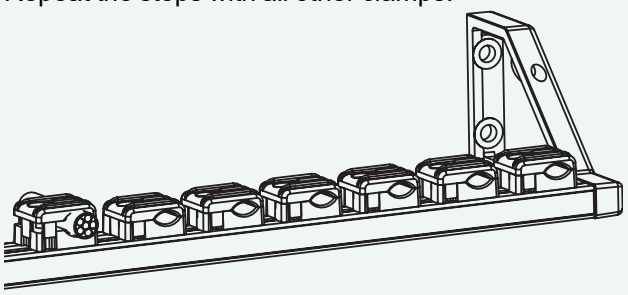

10.1.2 VSH Cable Guard 216 Clip

Technical data

Description	Set of four single clips for VSH Cable Guard 216 (see section VSH Cable Guard 216 on page 182). For single cables.
Part number	05148

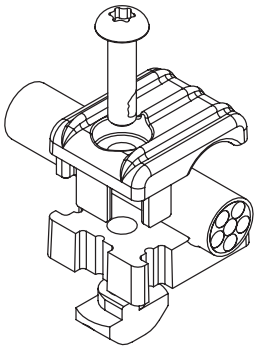

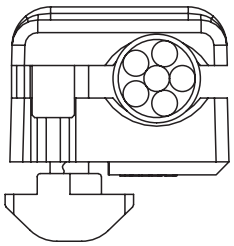

10.1.3 VSH Connection Kit 19"

Technical data

Description	Brackets for 19" rack mounting (front and back mounting plates required, see VSH Connection Kit Horizontal on page 188).
Part number	05151

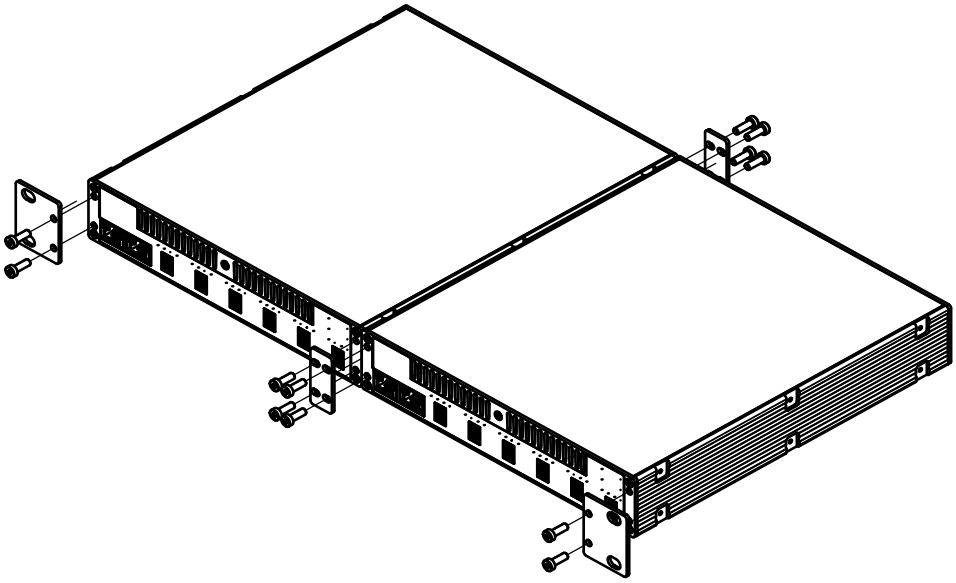

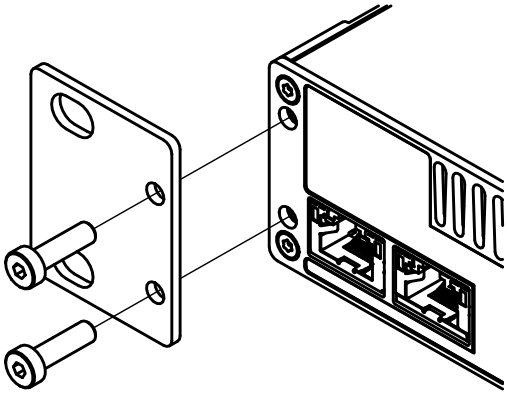

Caution!
To avoid mechanical damage to the accessories, the unit or the installation, make sure that the two mounting brackets are always mounted in alignment (either top or bottom):

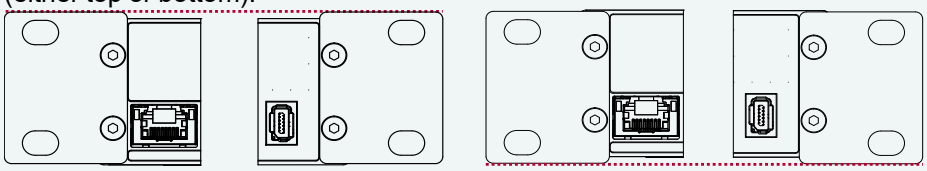

Note

For mounting two devices on top of each other, the rack brackets must be aligned accordingly. The rack brackets must not overlap between the devices!

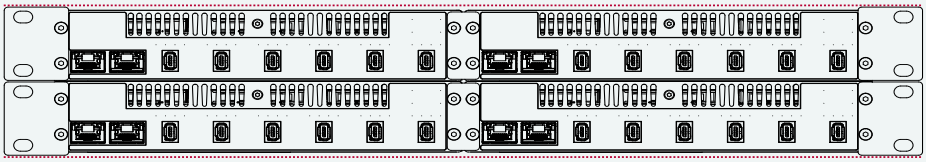

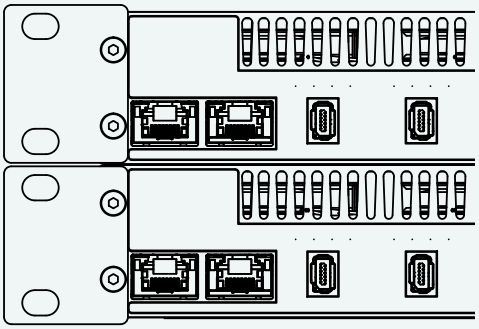

Note

- Elements may only be used for Vector devices in the Vector System Housing form factor.
- Always use both supplied elements and associated screws for mounting.
- For systems up to max. 20 kg.
- For mounting on a 19" rack, suitable screws must be selected to ensure permanent fixing according to the expected load (not included in the scope of delivery).
- In case of uncertainty and questions, please contact qualified personnel.
- Tightening torque: hexagon socket 3 mm, 1.7 Nm.

10.1.4 VSH Connection Kit Horizontal

Technical data

Description	Mounting plates for connecting two devices side by side (horizontally). The mounting is done on the front and back side of the devices.
Part number	05153

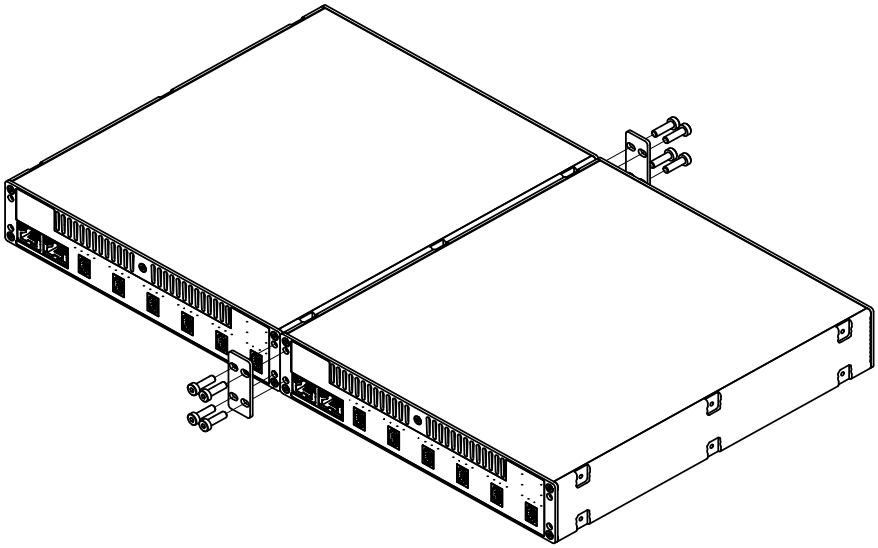

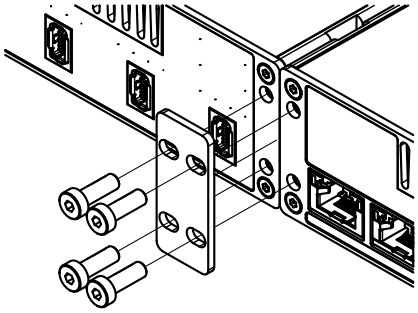

Note

- Elements may only be used for Vector devices in the Vector System Housing form factor.
- Always use both supplied elements and associated screws for mounting.
- For systems up to max. 20 kg.
- In case of uncertainty and questions, please contact qualified personnel.
- Tightening torque: hexagon socket 3 mm, 1.7 Nm.

10.1.5 VSH Connection Kit Vertical

Technical data

Description	Four small mounting plates for connecting two devices on top of each other (vertically). Mounting is done on the left and right side of the housing.
Part number	05152

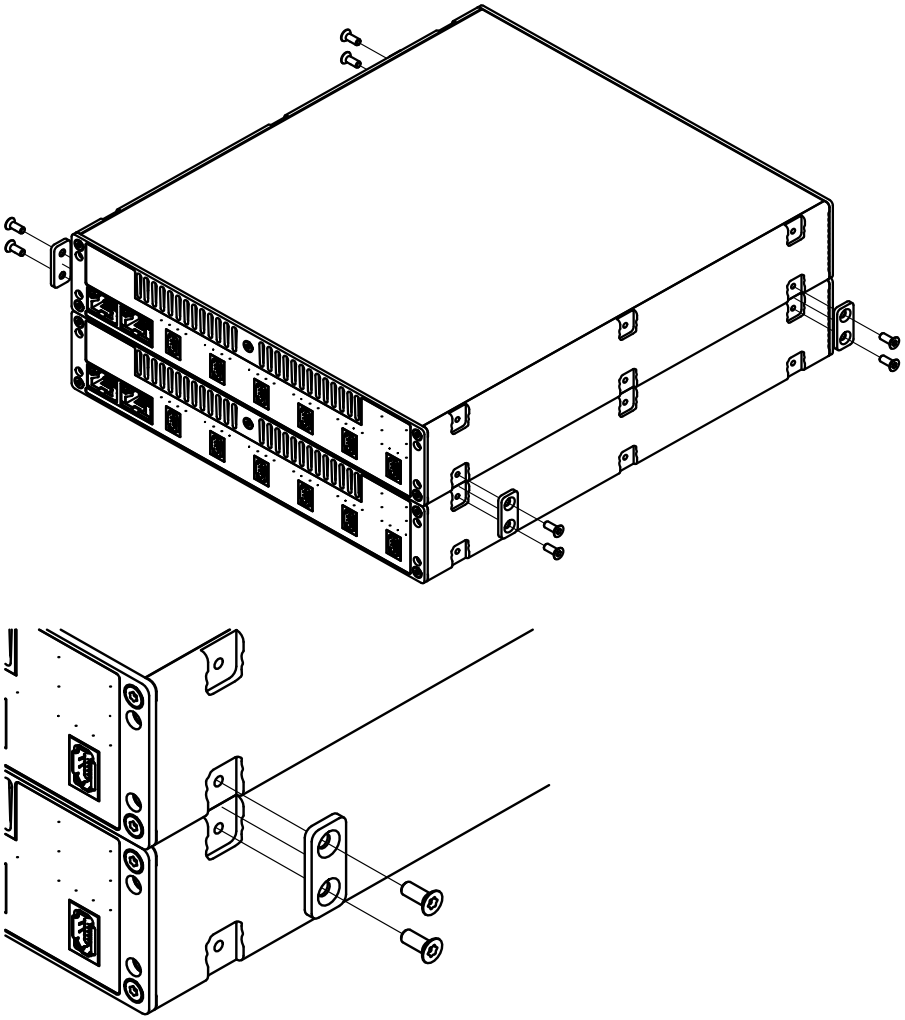

Note

- Elements may only be used for Vector devices in the Vector System Housing form factor.
- Always use all supplied elements and associated screws for mounting.
- For systems up to max. 20 kg.
- In case of uncertainty and questions, please contact qualified personnel.
- Tightening torque: Torx T10, 1.2 Nm.

10.1.6 VSH Equipment Foot Kit

Technical data

Description	Four spare mounting feet.
Part number	05150

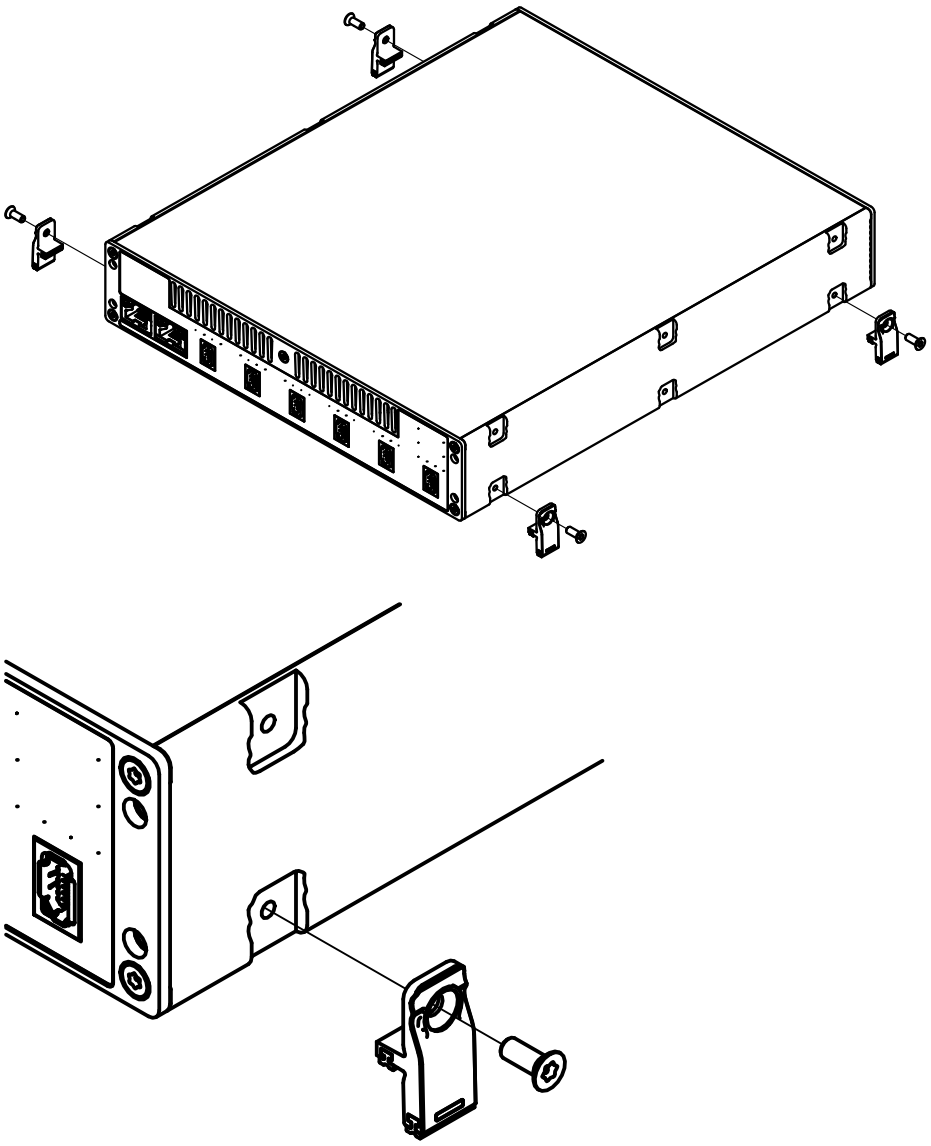

Note

- Elements may only be used for Vector devices in the Vector System Housing form factor.
- Always use all supplied elements and associated screws for mounting.
- For systems up to max. 20 kg.
- In case of uncertainty and questions, please contact qualified personnel.
- Tightening torque: Torx T10, 0.5...0.9 Nm.

10.1.7 VSH Mounting Flange Kit

Technical data

Description	Four mounting brackets. Allows fixing the device to a suitable surface.
Part number	05147

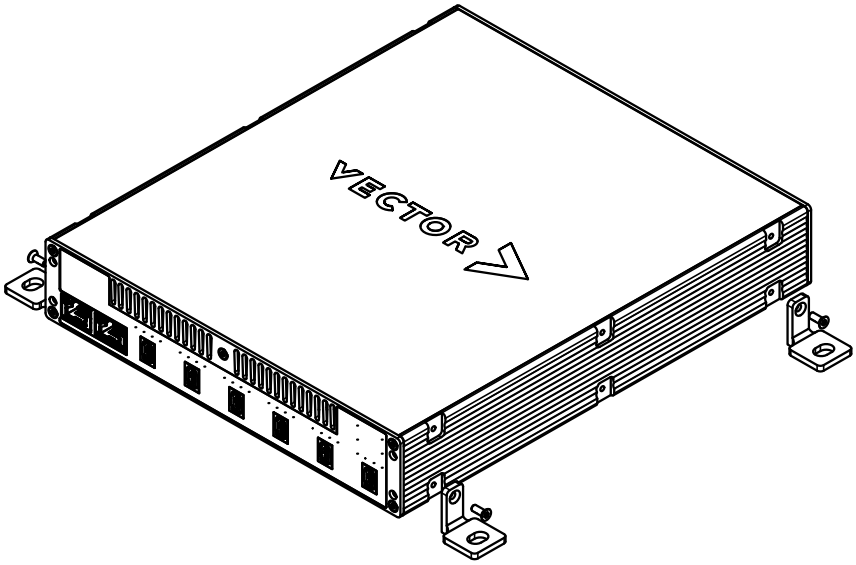

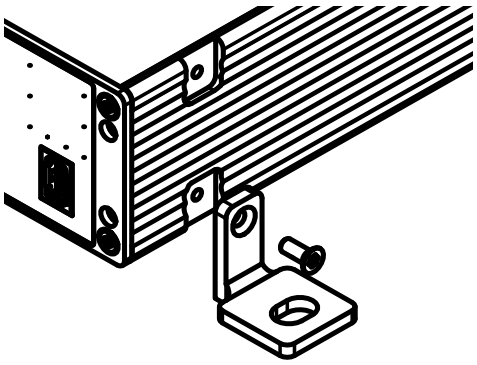

Note

- Mounting brackets may only be used for Vector devices in the Vector System Housing form factor.
- Always use all 4 brackets incl. screws for mounting.
- For systems up to max. 20 kg.
- For fixing the mounting brackets to the floor, wall or ceiling, suitable screws must be selected to ensure permanent fixing according to the expected load (not included in the scope of delivery).
- In case of uncertainty and questions, please contact qualified personnel.
- Tightening torque: Torx T10, 1.2 Nm.

10.1.8 Fix Kit 32mm Device

Technical data

Description	Fixing kit containing 4 pcs. of wall brackets for ALUbos housing incl. seals and screws. Suitable for VN1630A or VX1060 housing height.
Part number	07139



Note

- The Fix Kit may only be used for Vector devices.
- Always use all 4 brackets incl. screws for mounting.
- For devices up to max. 5 kg.
- For fixing the mounting brackets to the floor, wall or ceiling, suitable screws must be selected to ensure permanent fixing according to the expected load (not included in the scope of delivery).
- In case of uncertainty and questions, please contact qualified personnel.

10.1.9 Fix Kit 42mm Device

Technical data

Description	Fixing kit containing 4 pcs. of wall brackets for ALUbos housing 1040 incl. seals and screws. Suitable for VN1640A housing height.
Part number	07188



Note

- The Fix Kit may only be used for Vector devices.
- Always use all 4 brackets incl. screws for mounting.
- For devices up to max. 5 kg.
- For fixing the mounting brackets to the floor, wall or ceiling, suitable screws must be selected to ensure permanent fixing according to the expected load (not included in the scope of delivery).
- In case of uncertainty and questions, please contact qualified personnel.

10.1.10 Fix Kit Large Device

Technical data

Description	Fixing kit containing 4 pcs. of wall brackets for ALUbos housing 1600/1680 incl. seals and screws. Suitable for VN8900 or VX113x housing height.
Part number	07189



Note

- The Fix Kit may only be used for Vector devices.
- Always use all 4 brackets incl. screws for mounting.
- For devices up to max. 5 kg.
- For fixing the mounting brackets to the floor, wall or ceiling, suitable screws must be selected to ensure permanent fixing according to the expected load (not included in the scope of delivery).
- In case of uncertainty and questions, please contact qualified personnel.

10.2 Antennas

10.2.1 2.4 & 5 GHz Antenna SMA-R Std.

Technical data

Description	Standard antenna for EU, USA and other non-Asian countries. Suitable for 2.4 GHz and 5 GHz applications.
Part number	07169



Reference
A suitable antenna for Asian countries can be found section 2.4 & 5.2 GHz Antenna SMA-R Asia on page 195.

10.2.2 2.4 & 5.2 GHz Antenna SMA-R Asia

Technical data

Description	Standard antenna for Asia. Suitable for 2.4 GHz and 5.2 GHz applications.
Part number	07170



Reference
A suitable antenna for EU, USA and other non-Asia countries can be found section 2.4 & 5 GHz Antenna SMA-R Std. on page 195.

10.2.3 5.9 GHz DSRC Antenna SMA

Technical data

Description	Triton 5dBi DSRC 5.9GHz Dipole Terminal Antenna SMA(M). Hinged Connector for V2V and V2X Applications (5850-5925MHz DSRC band).
Dimensions	169 x 18 x 13 mm, Φ13 mm
Part number	07204

10.2.4 GNSS Antenna SMA

Technical data

Description	Low profile magnet mounted GPS-GLONASS-GALILEO positioning antenna
Length	3 m (RG174 Coax cable)
Part number	07205

10.3 SD/SDHC/SDXC Memory Cards

10.3.1 SD Memory Card (X82) 2 GB

Technical data

Description	2 GB SD flash card
Part number	22300

10.3.2 SDHC Memory Card (X82) 8 GB

Technical data

Description	8 GB SDHC Flash Card (industrial grade), optimized for long endurance
Part number	22331

10.3.3 SDHC Memory Card (X) 16 GB

Technical data

Description	16 GB SDHC flash card (industrial grade), optimized for long endurance
Part number	22243

10.3.4 SDHC Memory Card (XQI8C016Z) 32 GB

Technical data

Description	32 GB SDHC flash card (industrial grade)
Part number	22370

10.3.5 SDXC Memory Card (GXQI8C016Z) 128GB

Technical data

Description	128 GB SDXC flash card (industrial grade) for: ▶ VN8911 ▶ VN8914
Part number	22371

10.4 CFast Card Reader USB 3.0 (external)

Technical data

Description	CFast Memory Card Reader USB 3.0
Part number	22268

10.5 Ser2K

Technical data

Description	Ser2K is an adapter cable for voltage level conversion from RS232 to K-Line (DIN9021)
Length	1.5 m
Connectors	1x female D-SUB9 connector 3x banana plugs
Properties	Integrated voltage level converter in D-SUB connector. Tolerant against ground offset between PC and K-Line up to 30 V.
Conversion	RS232-K-Line-RS232 0 ... 150 kBaud
Supply voltage V_{batt}	6 V... 30 V
Operating temperature range	-20 °C ... +50 °C
Pull up on K-Line	1.2 k
Trigger threshold	30 % and 70 % V_{batt}
Part number	05051

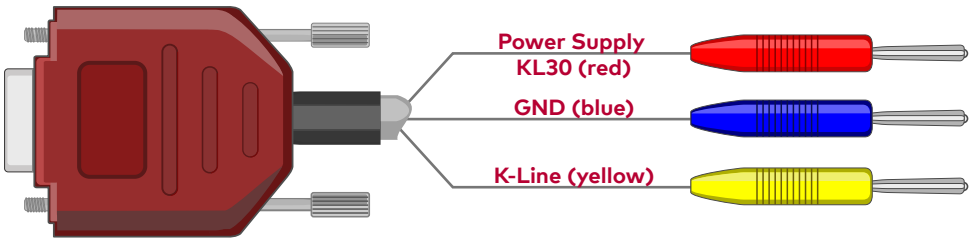

10.6 Protection

10.6.1 USB Protector Type 1

Technical data

Description	Protection against mechanical damages at the USB connector of VN1630, VN1630A, VN1640 or VN1640A.
Part number	05142



Step by Step Procedure

The following steps describe the mounting of the USB Protector:

1. Insert the USB cable into the USB Protector. Therefore, loosen the screw of the clamp.

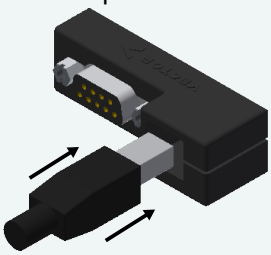

2. Attach the USB Protector to the Vector network interface and connect the D-SUB9 connector as well as the USB connector.



3. Tighten the screws of the D-SUB9 connector.
4. Tighten the screw to fix the USB connector.

10.6.2 CANcaseXL log CardFix Kit – SD Card Protection

Prevent insertion and rejection of SD card

The standard delivery of the CANcaseXL log allows the user to insert and remove the SD card from outside. In some situations, for example to prevent thefts, the inserted SD card shall not be removable. The CardFix Kit is an ideal protection solution, because the back side plate with the SD card slot is replaced by a closed plate. Thus the SD card cannot be removed so easily anymore.

Part number 07132.

Note
A detailed instruction is delivered with the kit. However, the modification of your CANcaseXL log can be done by our service.

10.6.3 Front Panel for VN8900

Technical data

Description	For use with VN8900 interface family without a slide-in module (e. g. VN8950, VN8970, VN8972)
Part number	07148



10.6.4 Protection Kit 1040

Technical data

Description	This protection kit contains two rubber bumpers which replace the standard seals of housing size 1040.
Part number	05110



Example



Figure 42: Top side



Figure 43: Bottom side

10.6.4.1 Mounting Instructions

Caution!
To prevent electrical damage during assembly, you should avoid touching the lower and upper sides of the PC boards.

Caution!
Always disconnect the power supply before assembling.

Step by Step Procedure

1. Remove all cables from the device.
2. Loosen the housing screws on the side with the four D-SUB9 connectors. This requires removing the two black decorative caps.

3. Carefully pull the PC-board out of the housing.

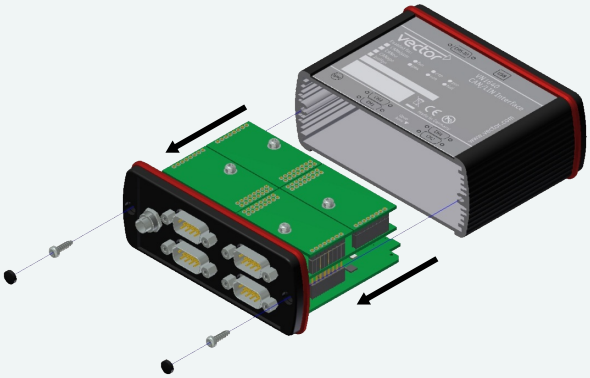

4. Remove the red standard sealing by pulling it over the black panel. Do not pull the sealing over the board to avoid damages on the components!

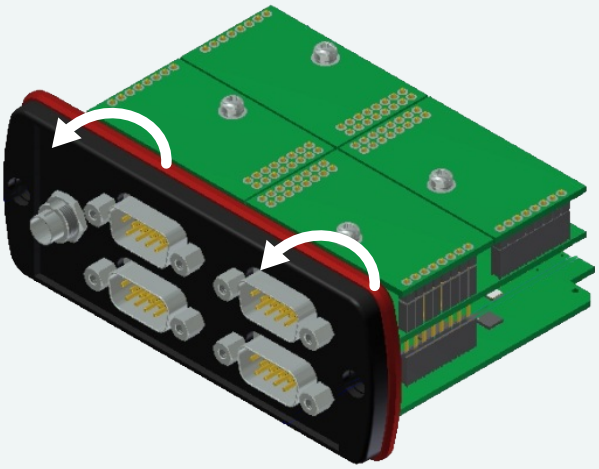

5. Pull the replacement rubber bumper over the black panel. Do not pull the sealing over the board to avoid damages on the components! Adjust the rubber bumper until it properly fits on the panel.

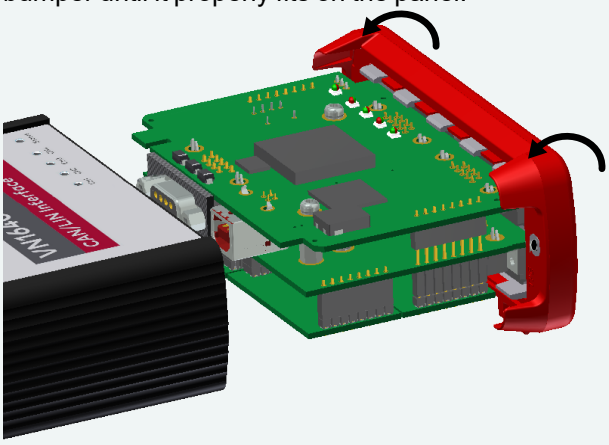

6. Place the board back in the housing. This operation involves placing the housing on a table with its back side (side with the bar code) facing upward. Then insert the board facing upward into the first guide rails. It should be possible to slide the board in the housing up to a few millimeters from the end without forcing it in.

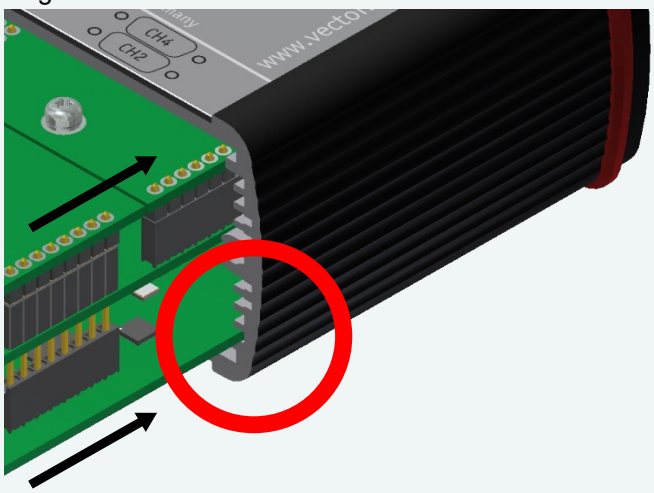

7. Close the housing by applying light pressure and then secure it with the appropriate screw fasteners. The screws should be secure but not excessively tight.
8. Please also attach the two black decorative caps.
9. Repeat the steps with the opposite panel.

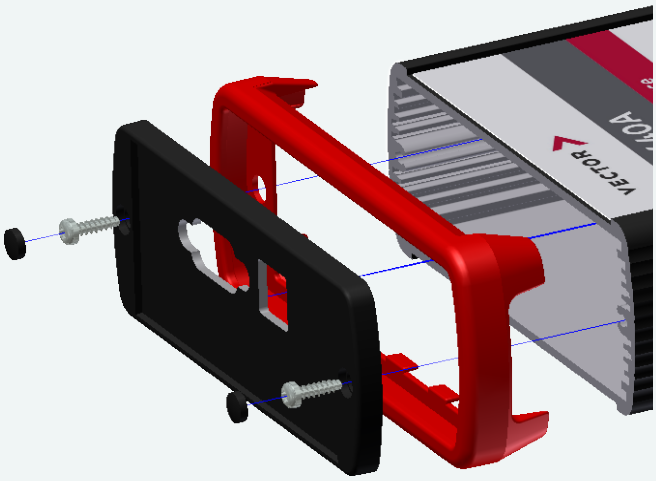

VECTOR

Visit our website for:

- News
- Products
- Demo software
- Support
- Training classes
- Addresses