IN180100

Inductive sensors ● Norm switching distance

Inductive sensor, M18x1, 61 long, non-flush mount, Sn: 10, 10–30 V DC, PNP NO, 2 m PVC cable, IP67, nickel-plated brass

including Nut



Inductive proximity switches are contactless sensors. They detect all conductive metals, regardless of whether they are moving or not. The achievable switching distance of the devices depends on the object material and its dimensions. These vibration-resistant sensors can be approached laterally or from the front. Inductive proximity switches are used for presence detection (e.g., product carriers), positioning (e.g., furnace doors), counting (e.g., nuts/screws), speed detection (e.g., on gears), in conveyor systems (e.g., hose feeders), or for distance measurements (e.g., press-fit inspection) of metallic objects.

Electrical features

Display	LED display
Type of switching function	Normally open contact (NO)
Type of electrical connection	Cable
Type of switching output	PNP
Rated switching current	200 mA
Relative hysteresis	15|15 %
Correction factor (aluminum)	0.3
Correction factor (copper)	0.2
Correction factor (brass)	0.4
Correction factor (St37)	1
Correction factor (stainl. steel)	0.7
No-load current	15 mA
Relative repeat accuracy	10 %
Switching distance	10 mm
Switching frequency	200 Hz
Voltage drop	2 V
Operating voltage (DC)	10 - 30 V
Electrical connection	3-wire cable, 2 m
Operating voltage	10–30 VDC
protection functions	short circuit protection | reverse polarity protection

Mechanical features

Number of cores	3
Alignment of cable entry	axial
Design	Cylinder, screw-thread
Thread length	40 mm
Thread pitch	1 mm
Cable length	2 m
Cable infeed	axial
Length	61 mm
Mechanical mounting condition for sensor	non-flush
Surface	nickel-plated
Degree of protection (IP)	IP67
Active area material of sensor	Plastic (PA6.6)
Housing material	brass
material of cable sheath	plastic (PVC)
Thread dimension	M18
Ambient temperature	-25 - 70 °C
dimensions	M18x1, 61 mm long

Other features

Reference medium / object	Standard measuring plate FE360 18x18x1mm

Classification

ETIM 8

More

IPF Product Group	200 inductive sensors
packaging dimensions	149 x 124 x 28 mm
gross weight	146 g
customs tariff number	85365019
WEEE number	40951076
OzDS-compliant	Yes
POP-compliant	Yes
Reach-compliant	Yes
RoHS-compliant	Yes

Connection

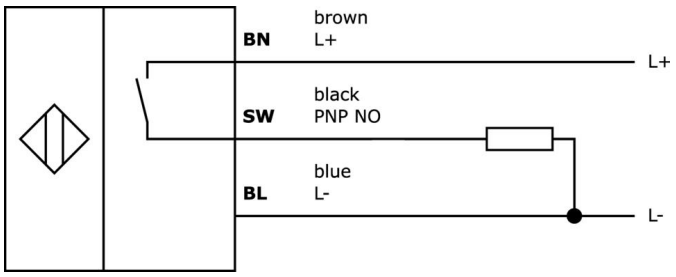

Dimensional drawing

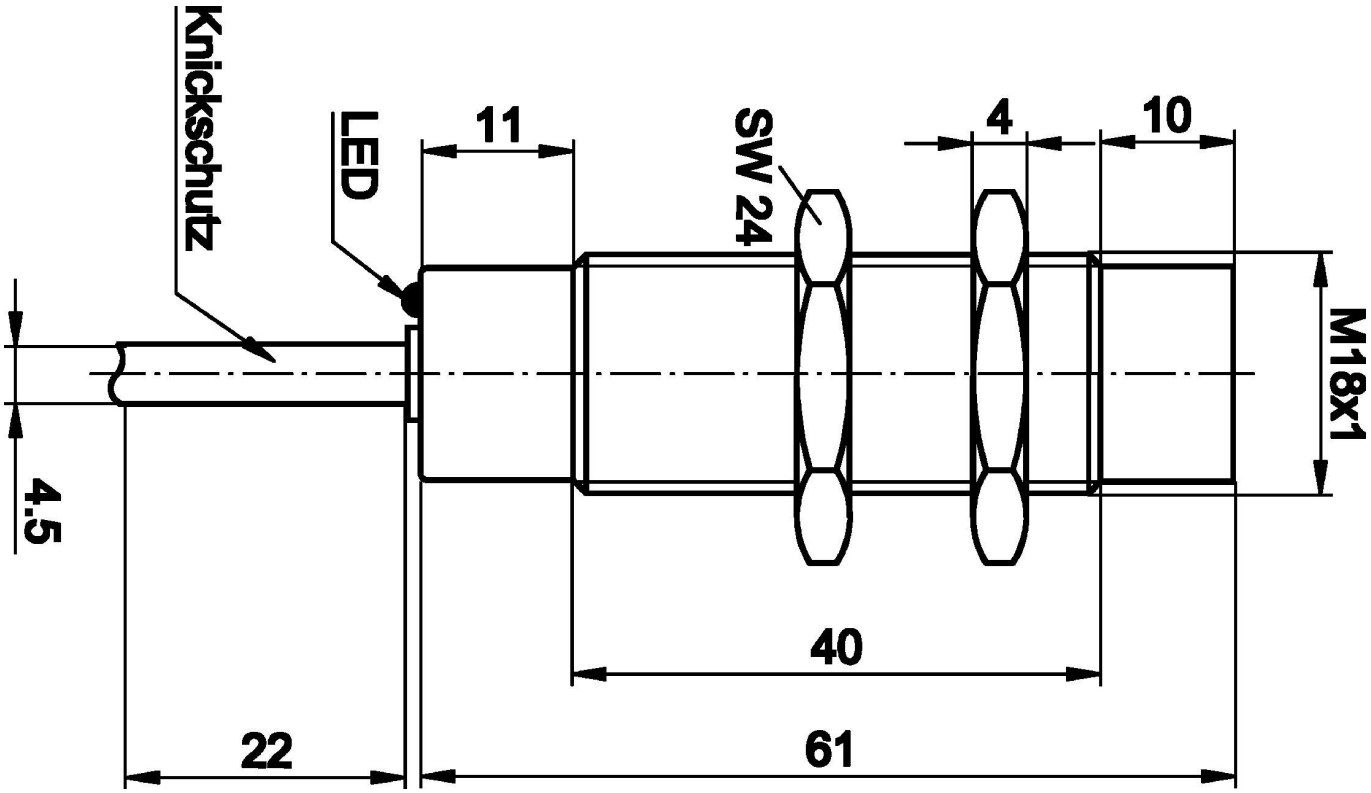

Extract accessories program

VY000004



DC Power Supply, Sensor Tester, 120 x 26 x 72 mm, 18 V, 0.04 A, 4-pole spring-loaded connector, IP20, plastic

VK003026



Cable connector, angular, field-assembly type, screw connection, Ø3–6.5 mm, 4 A, 240 V, -25–90 °C, 4-pole M12-connector, IP67, PBT

VK003028



Cable connector, straight, field-assembly type, screw connection, Ø3–6.5 mm, 4 A, 240 V, -25–90 °C, M12-connector 4-pole, IP67, PBT

VK003076



Cable connector, angular, field-terminable, soldered connection, 4A, 60V, -40–85°C, M8 3-pole connector, IP67, brass

VK003078



Cable connector, straight, field-terminable, soldered connection, Ø3.5–5 mm, 4 A, 60 V, -40–85 °C, M8 3-pole connector, IP67, brass

AY000117



Accessories: Sensor, Mounting Kit, Metal, Ball Joint

AY000162



Accessories, Magnet, Ø43mm, Neodymium-Iron-Boron, M5 inside thread, Rubber

AY000159



Accessories: Sensor, mounting tube, Ø12mm, 200 long, anodized aluminum

VY850001



Inverter/Signal Inversion/On/Off Delayed, 85x65x18 mm, 0.01–10 s, 12–30 V DC, 1x NC/NO, 8-pin terminals, IP40, plastic, plug-in jumpers

You can find further accessories on our homepage



Installation

Mounting / installation may only be carried out by a qualified electrician!



Disposal

WEEE number according to § 6 para. 3 ElektroG: 40951076

Safety warnings

/ Before initial operation, please make sure to follow all safety instructions that may be provided in the product information.

/ Never use these devices in applications where the safety of a person depends on their functionality.