Membrane level indicator

Level limit switches for bulk solids

MF

Appliance information

Index

	Page
Membran level indicator MFA	02
Membran level indicator MFB	03 - 05
Membran level indicator MFD	06 - 07
Membran level indicator MFE	08 - 11

Appliance information

Dimensions

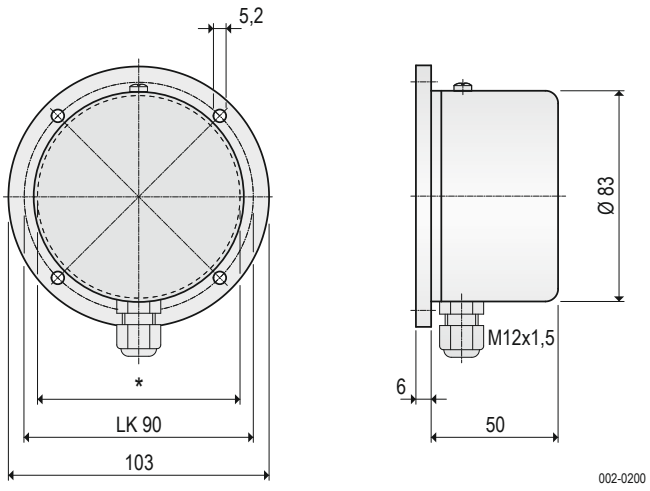

Hole Ø in the vessel max. 80 mm

Wiring connection

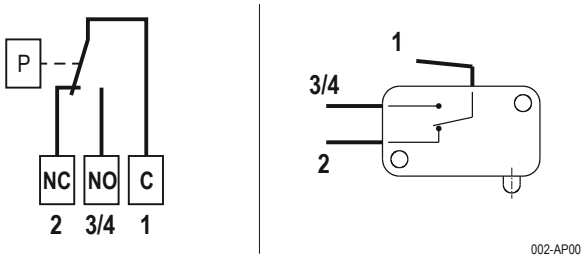

Use

The membrane level indicator observes the level as limit switch in silos, hoppers and vessels. There it is used as level indicator for dusty, powdery, granulated and grained bulk solids with a maximum grain size of 30 mm and a bulk density from 0.3 t/m³ ... 1.0 t/m³.

Mode of operation

The bulk solids presses with its weight against the membrane. A tappet directly transfers the pressure from the membrane to the microswitch. When the bulk solids are decreasing, pressure is taken off the membrane and the switch will be interconnected.

Construction

The plastic housing carries the membrane.
The membrane is transfering the pressure via a tappet onto a microswitch.
Sensitivity is adjustable by a spring.

Technical data

Materials	Housing Membrane	ABS Nitrile
Temperature range	Ta	-10 °C … +60 °C
Signal contact **switching capacity** **switching voltage**	Contact	change-over contact, potentialfree 2 A / 250 V ~ (AC) 24 V...250 V AC or 12 V...65 V DC
Response delay		none
Sensitivity		adjustable from 20 g ... 60 g
Cable connection		flat connection 4,8x0,8
Cable entry		Gland M12x1.5
Type of protection	IP	**IP44** acc. to DIN EN 60529
Weight		0.2 kg
Maintenance		none
Installation		any position

Appliance information

Dimensions

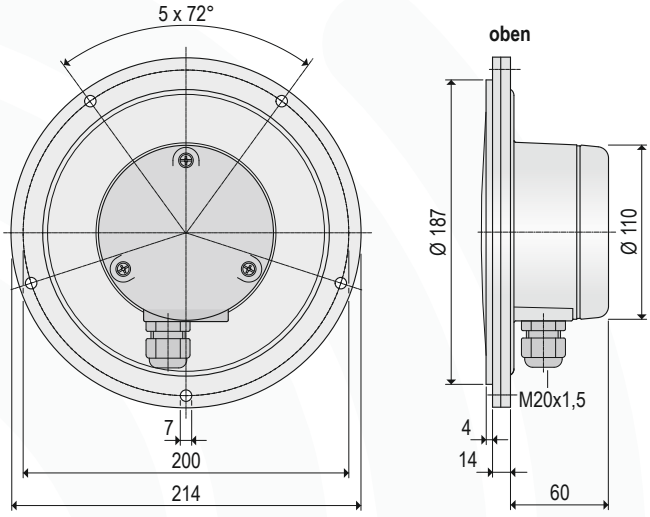

002-0205

Type selection

Type		Membrane	Mounting ring
MFB-NA	=	NBR	Aluminium
MFB-NE	=	NBR	Stainless steel 1.4301 / 304
MFB-VA	=	VITON	Aluminium
MFB-VE	=	VITON	Stainless steel 1.4301 / 304
MFB-EA	=	1.4310 / 302	Aluminium
MFB-EE	=	1.4310 / 302	Stainless steel 1.4301 / 304

Wiring connection

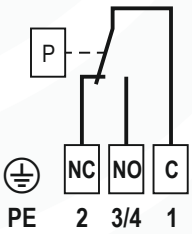

002-AP01

Use

The membrane level indicator observes the level as limit switch in silos, hoppers and vessels. There it is used as level indicator for dusty, powdery, granulated and grained bulk solids with a maximum grain size of 100 mm and a bulk density from 0.3 t/m³ ... 2.5 t/m³.

Mode of operation

The bulk solids presses with its weight against the membrane. A tappet directly transfers the pressure from the membrane to the switch. When the bulk solids are decreasing, pressure is taken off the membrane and the switch will be interconnected.

Construction

The aluminium housing carries a membrane which is held in place by a mounting ring. The membrane is transfering the pressure via a tappet onto a switch. Sensitivity is adjustable by a spring.

Technical data

Materials	Housing		Aluminium
	Membrane	**- N .**	NBR
	Membrane	**- V .**	VITON
	Membrane	**- E .**	Stainless steel 1.4310 / 302
	Mounting ring	**- . A**	Aluminium
	Mounting ring	**- . E**	Stainless steel 1.4301 / 304
Temperature range with ATEX option		**B1**	*Ta* -15 °C ... +80 °C
Temperatures without ATEX-Option			
Bulk solids	NBR	*Ts*	-20 °C ... +80 °C
	VITON		-20 °C ... +150 °C
	Stainless steel 1.4301 / 304		-25 °C ... +200 °C
Ambient		*Ta*	-20 °C ... +80 °C
Signal contact		*Contact*	change-over contact, potentialfree
switching capacity			4 A / 250 V ~ (AC)
switching voltage			24 V...250 V AC or 12 V...125 V DC
Response delay			none
Sensitivity with Membrane made of	NBR		adjustable from 100 g ... 200 g
	VITON		adjustable from 100 g ... 200 g
	Stainless steel 1.4301 / 304		adjustable from 200 g ... 500 g
Cable entry			Gland M20x1.5
Type of protection	DIN EN 60529		**IP40** **IP53** if cable gland is downwards **IP66** with stainless steel membrane
Weight			1.85 kg
Maintenance			none
Installation			any position

ATEX option only with stainless steel membrane in the **MFB-EA-B3** or **MFB-EE-B3** version

B1 Dust II 1/2D IIIC

Subject to modification

Appliance information

for potentially gas and dust explosive atmospheres

Dimensions

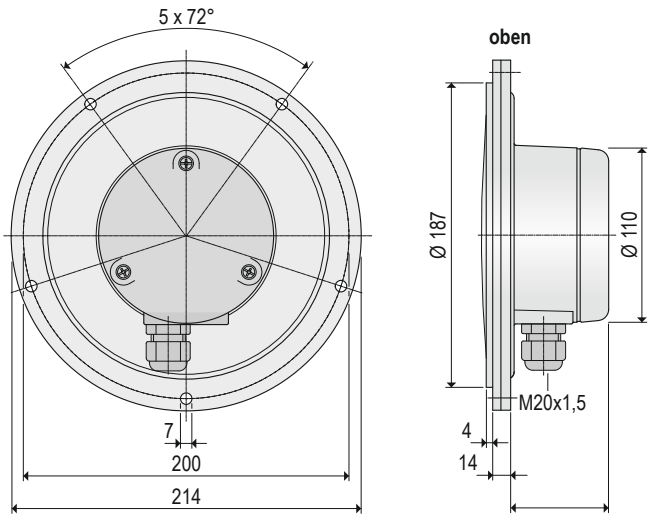

002-0205

Type selection

Type		Membrane	Mounting ring
MFB-EE-B5	=	Stainless steel 1.4310 / 302	Stainless steel 1.4301 / 304

Wiring connection

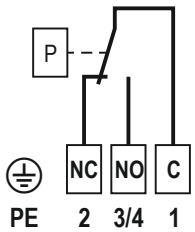

002-AP01

Use

The membrane level indicator observes the level as limit switch in silos, hoppers and vessels. There it is used as level indicator for dusty, powdery, granulated and grained bulk solids with a maximum grain size of 100 mm and a bulk density from 0.3 t/m³ ... 2.5 t/m³.

Mode of operation

The bulk solids presses with its weight against the membrane. A tappet directly transfers the pressure from the membrane to the switch. When the bulk solids are decreasing, pressure is taken off the membrane and the switch will be interconnected.

Construction

The aluminium housing carries a membrane which is held in place by a mounting ring. The membrane is transfering the pressure via a tappet onto a switch. Sensitivity is adjustable by a spring.

Technical data

Materials		
Membrane	**- E .**	Stainless steel 1.4310 / 302
Mounting ring	**- . E**	Stainless steel 1.4301 / 304
Temperature range with ATEX option	**B5** *Ta*	-15 °C … +75 °C
Signal contact	*Contact*	change-over contact, potentialfree
maximum switching voltage	$U_i \leq 30$ V	**intrinsically safe**
maximum switching capacity	$I_i \leq 0{,}1$ A	
Response delay		none
Sensitivity		200 g ... 500 g adjustable
Cable entry		Gland M20x1.5
Type of protection acc. DIN EN 60529	*IP*	**IP66**
Weight		1.85 kg
Maintenance		none
Installation		any position

ATEX option

B5

Gas+ Dust

II 1/2D IIIC
and
II 2G IIC

Subject to modification

Single parts

not available for devices with ATEX approval

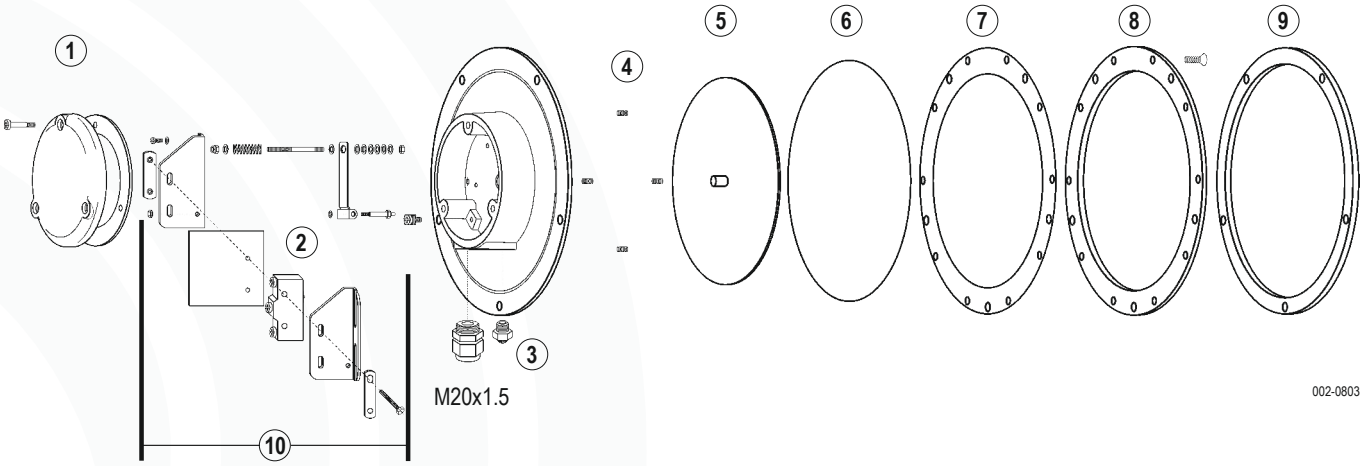

Item	Reference	Order code	Material
1	Cap seal	**MFB-DS01**	EDPM
2	Switch for version MFB-E..	**Z-15G-B**	
	MFB-N.. / MFB-V..	**BZ-2R-A2**	
3	Filter	**395028-AVS**	Brass
4	Spring	**MFB-FR01**	Spring steel
5	Membrane **V .**	**MFB-MB-VI**	VITON
	Membrane **N .**	**MFB-MB-NR**	NBR
6	Membrane **E .**	**MFB-MB-VA**	Stainless steel 1.4310 / 302
7	Seal ring	**MFB-DS02**	
8	Mounting ring **. E**	**MFB-HR-VA**	Stainless steel 1.4301 / 304
	Mounting ring **. A**	**MFB-HR-AL**	Aluminium
9	Gasket	**MFB-FD01**	NBR foam
10	Spare part kit incl. switch for **MFB-E .**	**MFB-EP11**	
10	Spare part kit incl. switch for **MFB-V . / MFB-N .**	**MFB-EP12**	

Appliance information

Dimensions

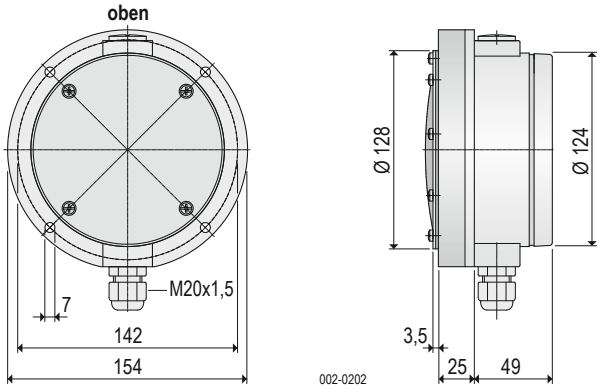

Use

The membrane level indicator observes the level as limit switch in silos, hoppers and vessels. There it is used as level indicator for dusty, powdery, granulated and grained bulk solids with a maximum grain size of 30 mm and a bulk density from 0.3 t/m³ ... 2.5 t/m³.

Mode of operation

The bulk solids presses with its weight against the double-membrane. A tappet directly transfers the pressure from the membranes to the switch. When the bulk solids are decreasing, pressure is taken off the membranes and the switch will be interconnected.

Construction

The housing, made of glass-fibre reinforced plastic, carries the two membranes which are held in place by mounting rings. The membranes are transfering the pressure via a tappet onto a switch. Sensitivity is adjustable by a spring.

Type selection

Type		Membrane	Mounting ring
MFD-NN	=	NBR	Steel, galvanized
MFD-NE	=	NBR	Stainless steel 1.4301 / 304
MFD-VN	=	VITON	Steel, galvanized
MFD-VE	=	VITON	Stainless steel 1.4301 / 304

Wiring connection

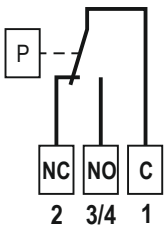

Technical data

Materials	Housing		GFK (glass-fibre reinforced plastic)
	Membrane	**- N .**	NBR
	Membrane	**- V .**	VITON
	Mounting ring	**- . N**	Steel, galvanized
	Mounting ring	**- . E**	Stainless steel 1.4301 / 304
Temperature range		*Ta*	-20 °C … +70 °C
Signal contact **switching capacity** **switching voltage**		*Contact*	change-over contact, potentialfree 4 A / 250 V ~ (AC) 24 V...250 V AC or 12 V...125 V DC
Response delay			none
Sensitivity			adjustable from 60 g ... 200 g
Cable entry			Gland M20x1.5
Type of protection		*IP*	**IP65** acc. to DIN EN 60529
Weight			0.73 kg
Maintenance			none
Installation			any position

Subject to modification

Single parts

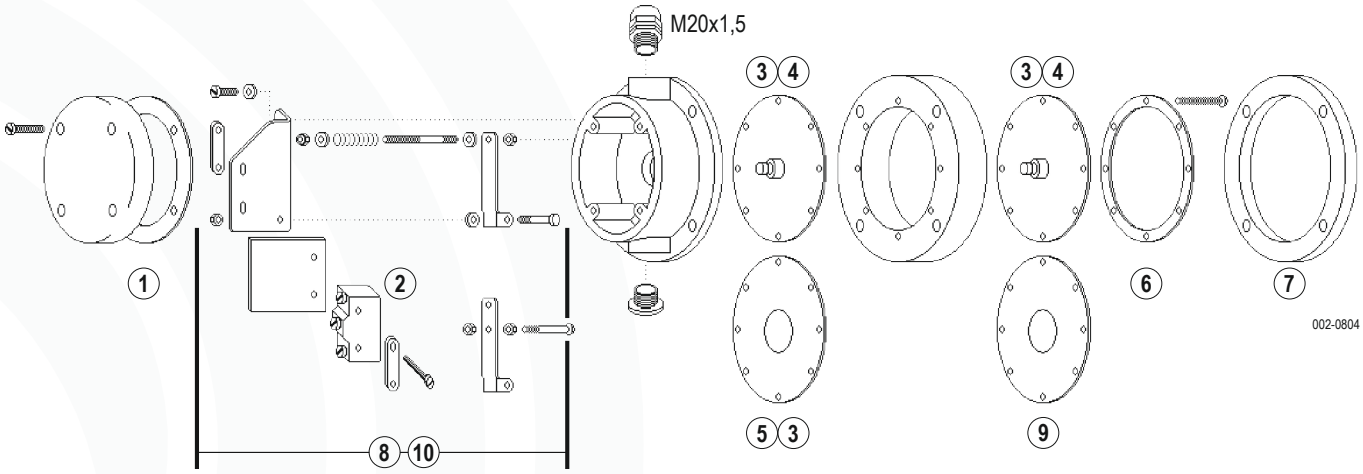

Item	Reference	Order code	Material
1	Cap seal	MF-DS001	NBR
2	Switch	BZ-2R-A2	
3	Tappet	MF-WE001	Aluminium
4	Membrane **N .**	MF-MB-NR	Housing membrane or bulk solids touching membrane made of NBR
5	Housing membrane	MF-GM-NR	Housing membrane in case of VITON design
6	Mounting ring **. N** Mounting ring **. E**	MF-HR-ST MF-HR-VA	Steel, galvanized Stainless steel 1.4301 / 304
7	Gasket	MF-FD-NR	NBR foam
8	Spare part kit incl. switch	MF-EP001	Design for bulk solids touching membrane made of NBR
9	Membrane **V .**	MF-MB-VI	Bulk solids touching membrane made of VITON
10	Spare part kit incl. switch	MF-EP002	Design for bulk solids touching membrane made of VITON

Appliance information

Dimensions MFE

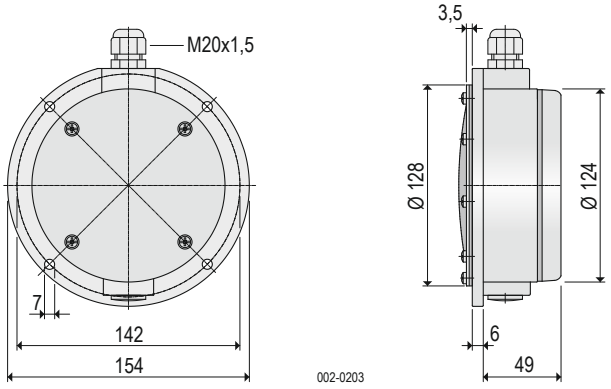

Dimensions MFEF

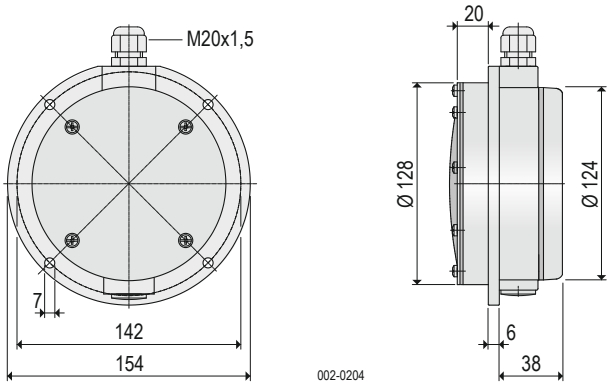

Wiring connection

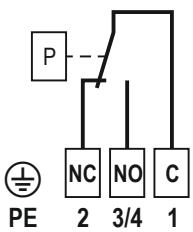

Use

The membrane level indicator observes the level as limit switch in silos, hoppers and vessels. There it is used as level indicator for dusty, powdery, granulated and grained bulk solids with a maximum grain size of 30 mm and a bulk density from 0.3 t/m³ ... 2.5 t/m³.

Mode of operation

The bulk solids presses with its weight against the membrane. A tappet directly transfers the pressure from the membrane to the switch. When the bulk solids are decreasing, pressure is taken off the membrane and the switch will be interconnected.

Construction

The housing carries a membrane which is held in place by a mounting ring. The membrane is transfering the pressure via a tappet onto a switch. Sensitivity is adjustable by a spring.

Technical data

Materials	Housing	GFK (glass-fibre reinforced plastic)
	Membrane **- N .**	NBR
	Membrane **- V .**	VITON
	Membrane **- E .**	Stainless steel 1.4310 / 302
	Mounting ring **- . N**	Steel, galvanized
	Mounting ring **- . E**	Stainless steel 1.4301 / 304
Temperature range	***Ta***	-20 °C ... +60 °C
Signal contact	***Contact***	change-over contact, potentialfree
switching capacity		4 A / 250 V AC
switching voltage		24 V...250 V AC or 12 V...125 V DC
Response delay		none
Sensitivity with Membrane made of	NBR	adjustable from 60 g ... 1000 g
	VITON	adjustable from 60 g ... 1000 g
	Stainless steel 1.4301 / 304	adjustable from 150 g ... 2000 g
Cable entry		Gland M20x1.5
Type of protection	***IP***	**IP40** DIN EN 60529 **IP53** if cable gland is upwards **IP65** with stainless steel membrane
Weight	**MFE**	0.48 kg
	MFEF	0.49 kg
Maintenance		none
Installation		any position

Subject to modification

Appliance information

Dimensions MFE-A

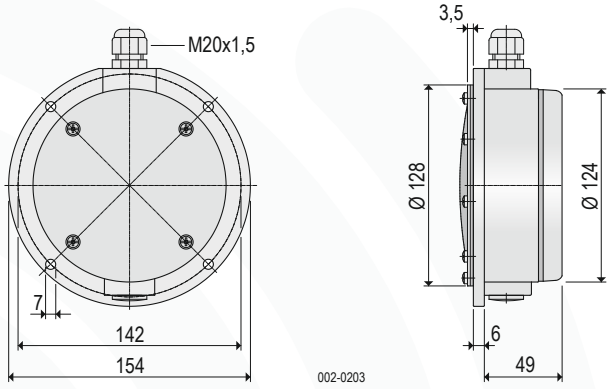

Dimensions MFEF-A

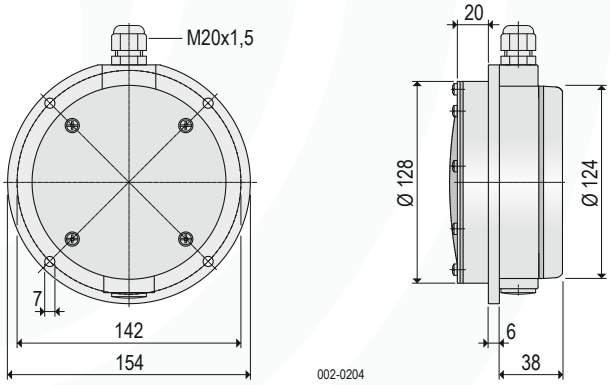

Wiring connection

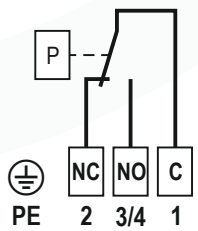

Use

The membrane level indicator observes the level as limit switch in silos, hoppers and vessels. There it is used as level indicator for dusty, powdery, granulated and grained bulk solids with a maximum grain size of 30 mm and a bulk density from 0.3 t/m³ ... 2.5 t/m³.

Mode of operation

The bulk solids presses with its weight against the membrane. A tappet directly transfers the pressure from the membrane to the switch. When the bulk solids are decreasing, pressure is taken off the membrane and the switch will be interconnected.

Construction

The housing carries a membrane which is held in place by a mounting ring. The membrane is transfering the pressure via a tappet onto a switch. Sensitivity is adjustable by a spring.

Technical data

Materials	Housing	**- A**	Aluminium
	Membrane	**- N .**	NBR
	Membrane	**- V .**	VITON
	Membrane	**- E .**	Stainless steel 1.4310 / 302
	Mounting ring	**- . N**	Steel, galvanized
	Mounting ring	**- . E**	Stainless steel 1.4301 / 304
Temperature range		***Ta***	Aluminium -25 °C ... +70 °C
Signal contact			change-over contact, potentialfree
		Contact	
	switching capacity		4 A / 250 V AC
	switching voltage		24 V...250 V AC or 12 V...125 V DC
Response delay			none
Sensitivity	with Membrane made of NBR		adjustable from 60 g ... 1000 g
	VITON		adjustable from 60 g ... 1000 g
	Stainless steel 1.4301 / 304		adjustable from 150 g ... 2000 g
Cable entry			Gland M20x1.5
Type of protection		***IP***	**IP40** DIN EN 60529 **IP53** if cable gland is upwards **IP66** with stainless steel membrane
Weight		**MFE-A**	0.95 kg
		MFEF-A	1.00 kg
Maintenance			none
Installation			any position

ATEX option only with stainless steel membrane in the **MFE-A-EE-B1** or **MFEF-A-EE-B1** version

B1 Dust II 1/2D IIIC

Subject to modification

Appliance information

for potentially gas and dust explosive atmospheres

Dimensions MFE-A

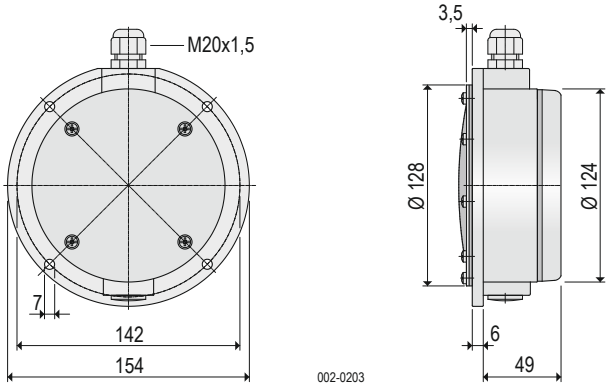

Dimensions MFEF-A

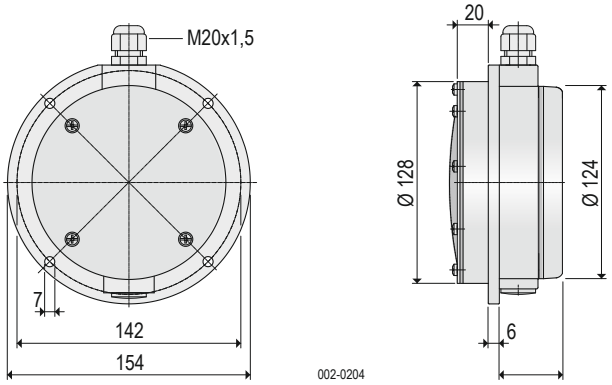

Wiring connection

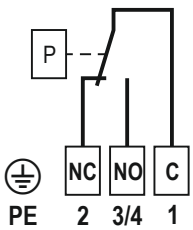

Use

The membrane level indicator observes the level as limit switch in silos, hoppers and vessels. There it is used as level indicator for dusty, powdery, granulated and grained bulk solids with a maximum grain size of 30 mm and a bulk density from 0.3 t/m³ ... 2.5 t/m³.

Mode of operation

The bulk solids presses with its weight against the membrane. A tappet directly transfers the pressure from the membrane to the switch. When the bulk solids are decreasing, pressure is taken off the membrane and the switch will be interconnected.

Construction

The housing carries a membrane which is held in place by a mounting ring. The membrane is transfering the pressure via a tappet onto a switch. Sensitivity is adjustable by a spring.

Technical data

Materials	Housing	**- A**	Aluminium
	Membrane	**- E .**	Stainless steel 1.4310 / 302
	Mounting ring	**- . E**	Stainless steel 1.4301 / 304
Temperature range		*Ta*	-25 °C ... +70 °C
Signal contact		*Contact*	change-over contact, potentialfree
maximum switching voltage			$U_i \leq 30$ V
maximum switching capacity			$I_i \leq 0.1$ A **intrinsically safe**
Response delay			none
Sensitivity			adjustable from 150 g ... 2000 g
Cable entry			Gland M20x1.5
Type of protection		*IP*	**IP66** DIN EN 60529
Weight		**MFE-A**	0.95 kg
		MFEF-A	1.00 kg
Maintenance			none
Installation			any position

Type selection

Type		Membrane	Mounting ring
MFE-A-EE-B5	=	Stainless steel 1.4310 / 302	Stainless steel 1.4301 / 304
MFEF-A-EE-B5	=	Stainless steel 1.4310 / 302	Stainless steel 1.4301 / 304

ATEX option

B5

Gas+ Dust Ex

II 1/2D IIIC
and
II 2G IIC

Subject to modification

Single parts

not available for devices with ATEX approval

MFE MFEF

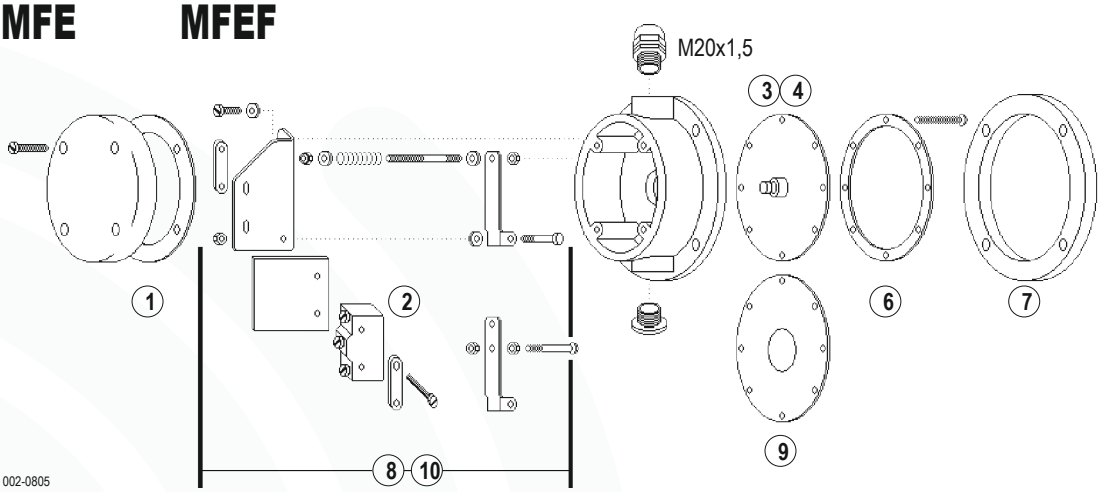

Item	Reference	Order code	Material
1	Cap seal	MF-DS001	NBR
2	Switch	BZ-2R-A2	
3	Tappet	MF-WE001	Aluminium
4	Membrane **N .**	MF-MB-NR	Bulk solids touching membrane made of NBR
6	Mounting ring **. N** Mounting ring **. E**	MF-HR-ST MF-HR-VA	Steel, galvanized Stainless steel 304
7	Gasket	MF-FD-NR	NBR foam
8	Spare part kit incl. switch	MF-EP001	Design for bulk solids touching membrane made of NBR
9	Membrane **V .**	MF-MB-VI	Bulk solids touching membrane made of VITON
10	Spare part kit incl. switch	MF-EP002	Design for bulk solids touching membrane made of VITON

MFE-AEE MFEF-AEE

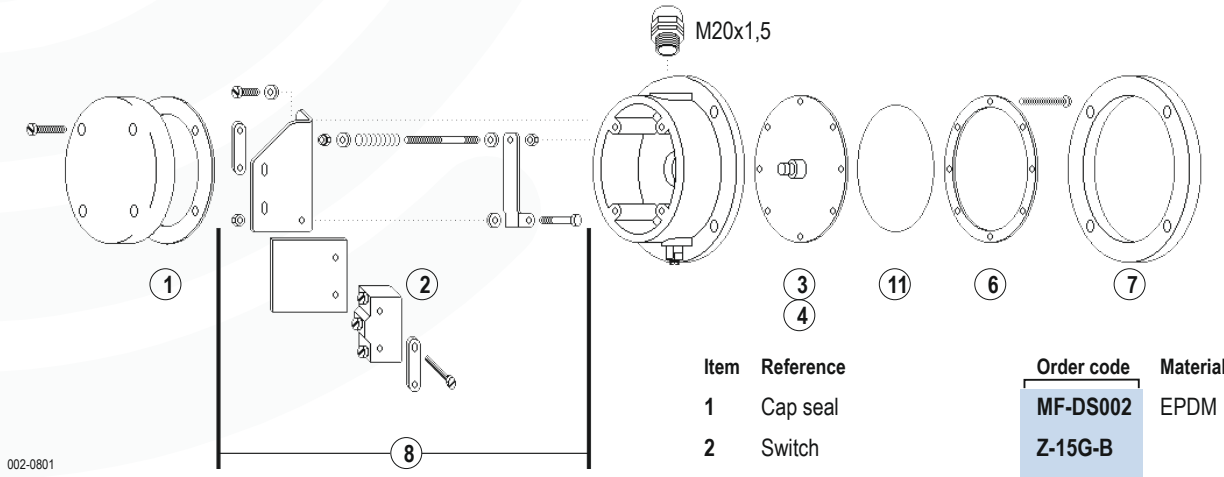

Item	Reference	Order code	Material
1	Cap seal	MF-DS002	EPDM
2	Switch	Z-15G-B	
3	Tappet	MF-WE001	Aluminium
4	Sealing	MF-MB-NR	NBR
6	Mounting ring **. E**	MF-HR-VA	Stainless steel 304
7	Gasket	MF-FD-NR	NBR foam
8	Spare part kit incl. switch	MF-EP003	
11	Membrane **E .**	MF-MB-VA	Stainless steel 302