▶ **Read and follow these safety instructions first and take notice of the operating instructions.**

Safety instructions

1. **The installation, initial operation and maintenance may be done by a qualified expert with electrical know-how only.**
2. **Comply with the local and statutory rules and regulations and/or the VDE 0100.**
3. **Take notice of the temperature specifications at the data plate.**
4. **A fuse (with max. 4A) has to be connected in series to the voltage supply.**
5. **Protect the signal contact from voltage peaks when inductive loads are connected.**
6. **The device may put into operation if it is closed, only.**
7. **Switch off the power supply, before opening the device. (touchdangerous voltage)**

Operating instructions

1. Description

1.1 Intended use

The level indicator observes the filling level as a limit switch in silos and vessels. It can be used as full, demand and empty indicator for dusty and powdery, granulated and grainy bulk goods with a max. grain size up to 30 mm and with a bulk density of 0.3 t/m³ ... 2.5 t/m³.

1.2 Function

The bulk goods presses with its weight against the membrane. A tappet directly transfers the pressure from the membrane to the switch. When the bulk goods are decreasing, pressure is taken off the membrane and the switch will be interconnected.

1.3 Technical data

Manufacturer		**MOLLET Füllstandtechnik GmbH**
Address		Industriepark RIO 103 74706 Osterburken
Name		Membrane level indicator
Type		**MFE** (GFK) and **MFE-A** (Alu) **MFEF** (GFK) and **MFEF-A** (Alu)
Temperature range	*Ta*	GFK | Aluminium **-20 °C ... +60 °C | -25 °C ... +70 °C**
Signal contact		change-over contact, potentialfree
Capacity of the contact **Switching voltage**	*Contact*	**4 A / 250 V AC** 24 V ... 250 V AC or 12 V ... 125 V DC
Response delay		none
Cable connection		Screw M4
Cable entry		Cable gland M20x1.5
Type of protection acc. to DIN EN 60529	*IP*	**IP40** **IP53** if cable gland is upwards **IP65** with stainless steel membrane **IP66** with aluminium housing
Overpressure safety		up to 1 bar
Weight	**MFE** 0.48 kg **MFE-A** 0.95 kg **MFEF** 0.49 kg **MFEF-A** 1.00 kg	
Maintenance		none
Mounting position		any position

1.4 Materials

Type		Housing
MFE(F)- . .	=	GFK (glass-fibre reinforced plastics)
MFE(F)-A . .	=	Aluminium

Type		Membrane	Mounting ring
MFE(F)- . NN	=	NBR	Steel, galvanized
MFE(F)- . VN	=	VITON	Steel, galvanized
MFE(F)- . NE	=	NBR	Stainless steel 1.4301 / 304
MFE(F)- . VE	=	VITON	Stainless steel 1.4301 / 304
MFE(F)- . EE	=	1.4310/302	Stainless steel 1.4301 / 304

1.5 Dimensions

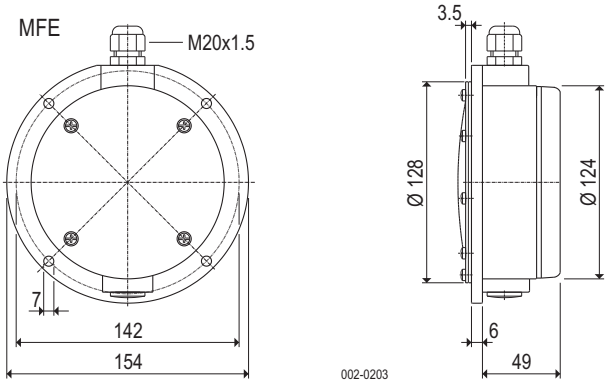

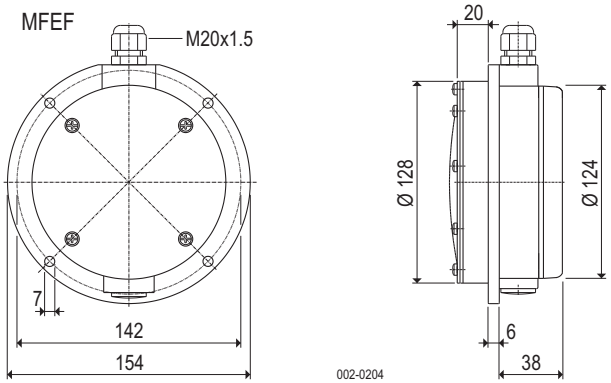

2. Installation

2.1 Preparation

- Check the membrane of visual transport damage.
- Read and follow the safety instructions and the operating instructions, before handling with the device !

2.2 Mounting in the vessel

Position the level indicator with the gasket at the provided flange and fix it with 4 washers and screws M6.

2.3 Electrical connection

Circuit diagram

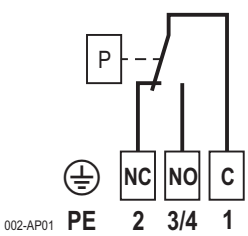

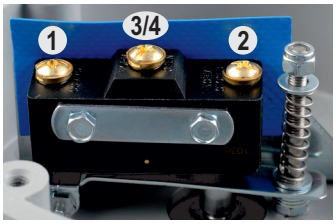

2.4 Cable gland

- After electrical connection, tighten the cable gland.
- Screw the cap nut, until the cable entry is closed tightly.

3. Commissioning

- Put the level indicator into operation only, if the installation and the electrical connection have been done correctly.
- The level indicator is presetted at sensitive.
- With the adjusting nut the device can be adjustable insensitive. Clockwise insensitive.
- **Sensitivities** with membrane:

NBR	60 g ... 1000 g
VITON	60 g ... 1000 g
Stainless steel 1.4301 / 304	150 g ... 2000 g

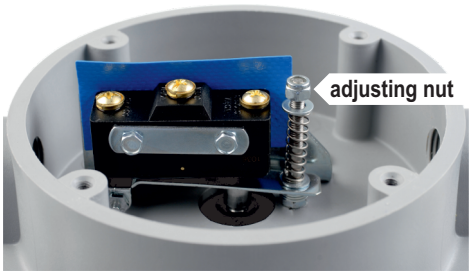

4. Utilization

4.1 Normal operation

- Use the level indicator in its intended application only.
- The level indicator is provided for use in silos or vessels with pressureless operation.
- Comply with the specifications on the data plate. Check the membrane of the level indicator, when the permissible temperature of bulk goods was exceeded or was fallen short off.
- Damaged devices have to put out of operation immediately.

4.2 Inexpert handling

- Ignoring of the safety instructions and the operating instructions.
- Not intended use.
- Mounting of spare parts which are no original parts.
- Violation against applicable law and standards.

5. Maintenance and servicing

5.1 General informations

- Do maintenance work only, if the silo or the vessel is empty and if there is no overpressure or vacuum.
- Use original spare parts only.

5.2 Maintenance

- Inspect in regular intervals if there is any wear or abrasion at the membrane. Define the control intervals, depending on the characteristics of the bulk goods.
- In case of damage or abrasion, replace the membrane immediately with a new membrane.

5.3 Servicing

- Damaged parts have immediately replaced with similar.
- Until the complete reconstruction of the proper function, the level indicator must not be used any more.

6. Storage

- Store the level indicator dry and dust-free.
- Protect the membrane against pointed objects and ultraviolet radiation.

7. Disposal

- The level indicator can be recycled.
- The disposal applies to the valid environmental guidelines according to the location of the carrier and the local manufacturing conditions.

Single parts

not available for devices with ATEX approval

MFE MFEF

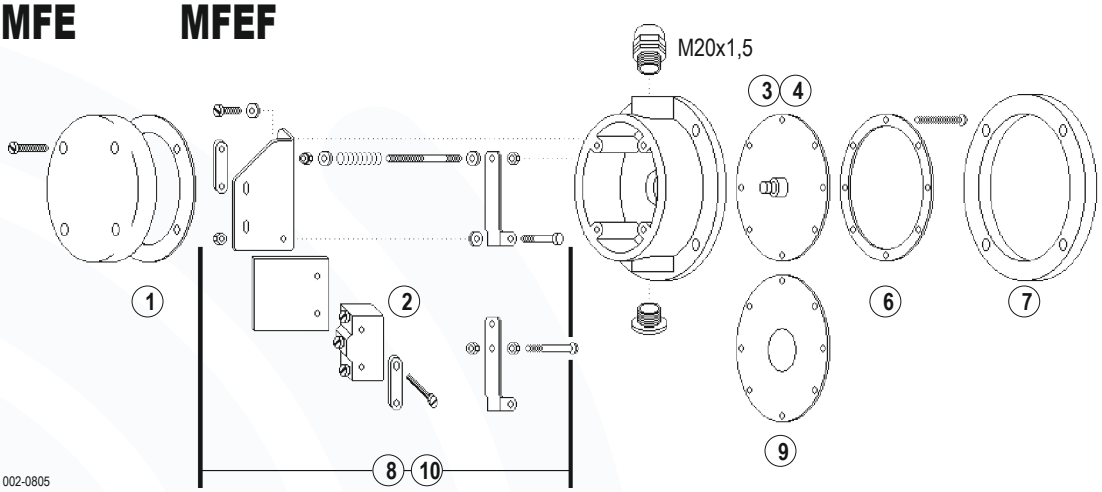

Item	Reference	Order code	Material
1	Cap seal	MF-DS001	NBR
2	Switch	BZ-2R-A2	
3	Tappet	MF-WE001	Aluminium
4	Membrane **N .**	MF-MB-NR	Bulk solids touching membrane made of NBR
6	Mounting ring **. N** Mounting ring **. E**	MF-HR-ST MF-HR-VA	Steel, galvanized Stainless steel 304
7	Gasket	MF-FD-NR	NBR foam
8	Spare part kit incl. switch	MF-EP001	Design for bulk solids touching membrane made of NBR
9	Membrane **V .**	MF-MB-VI	Bulk solids touching membrane made of VITON
10	Spare part kit incl. switch	MF-EP002	Design for bulk solids touching membrane made of VITON

MFE-AEE MFEF-AEE

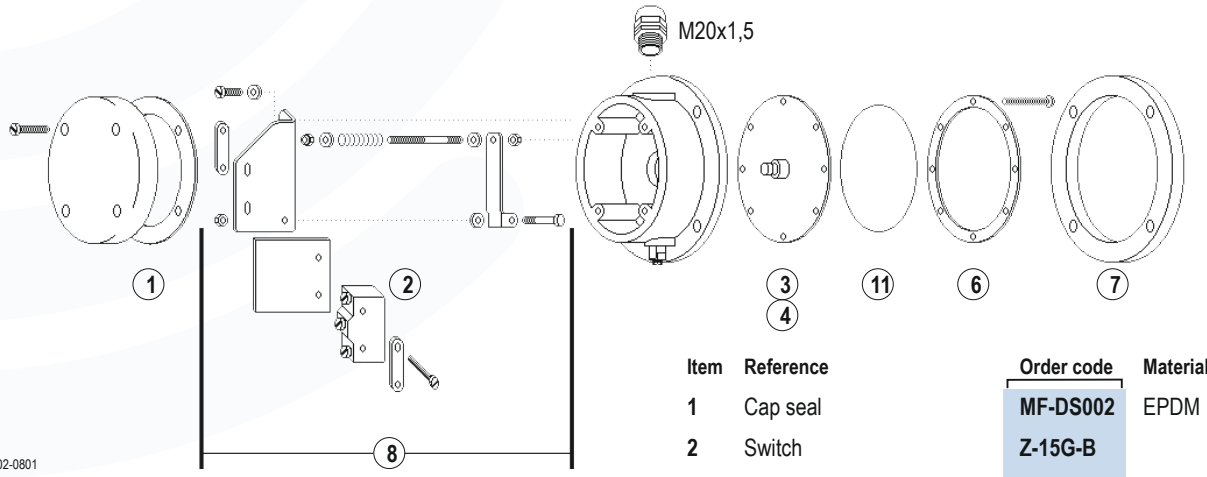

Item	Reference	Order code	Material
1	Cap seal	MF-DS002	EPDM
2	Switch	Z-15G-B	
3	Tappet	MF-WE001	Aluminium
4	Sealing	MF-MB-NR	NBR
6	Mounting ring **. E**	MF-HR-VA	Stainless steel 304
7	Gasket	MF-FD-NR	NBR foam
8	Spare part kit incl. switch	MF-EP003	
11	Membrane **E .**	MF-MB-VA	Stainless steel 302

EU-Konformitätserklärung
EU Declaration of Conformity

Membran-Füllstandanzeiger / Membran level indicator

Produkt / Product	Version
MOLOSmembran	MFA, MFB, MFD, MFE, MFEF, MFE-A, MFEF-A

MOLLET Füllstandtechnik GmbH erklärt hiermit in alleiniger Verantwortung, dass die Produkte mit den aufgeführten Richtlinien übereinstimmen. Diese Konformitätserklärung gilt nur in Zusammenhang mit den gültigen Betriebsanleitungen und Sicherheitshinweisen der MOLLET Füllstandtechnik GmbH.

MOLLET Füllstandtechnik GmbH hereby declares under its sole responsibility that the products comply with the listed directives. This declaration of conformity only applies in conjunction with the valid operating instructions and safety instructions of MOLLET Füllstandtechnik GmbH.

Richtlinie / Directive		angewandte harmonisierte Normen oder normative Dokumente / applied harmonized standards or normative documents
LVD	2014/35/EU	EN 61010-1:2010 + A1:2019 + A1:2019/AC:2019

Geräte mit Ex - Kennzeichnung entsprechen zusätzlich folgender Richtlinie:
Devices with Ex - labelling also comply with the following directive:

Richtlinie / Directive		variantenabhänig angewandte harmonisierte Normen oder normative Dokumente / depending on variant applied harmonized standards or normative documents	
ATEX	2014/34/EU	EN IEC 60079-0:2018/AC:2020-02 EN 60079-11:2012 EN 60079-31:2014	

EU-Baumusterprüfbescheinigungsnummer /
EU-Type Examination Certificate No.: **IBExU06ATEX1068**
IBExU23ATEX1019X

Ausgestellt von / Issued by: IBExU Institut für Sicherheitstechnik GmbH, 09599 Freiberg (0637)

Qualitätssicherung /
Quality assurance: TÜV AUSTRIA GMBH, Deutschstraße 10, 1230 Wien / Austria (0408)

MOLLET Füllstandtechnik GmbH
Industriepark RIO 103
74706 Osterburken
DEUTSCHLAND

Osterburken, 12.08.2024

Wolfgang Hageleit
Geschäftsführer / Managing director