# VACUUM TOILET

**6545827 EVAC 910, FLOOR MODEL USPH, SILENT (EVACINHUSH), WHITE**
**6545828 EVAC 910, FLOOR MODEL USPH, ANIARA, WHITE**
**6545829 EVAC 910, FLOOR MODEL USPH, OPEN FRONT, WHITE**

P/N 6544996 Pneumatic push button
P/N 6541057 Optional pneumatic push button kit, wall installation, push button: white plastic

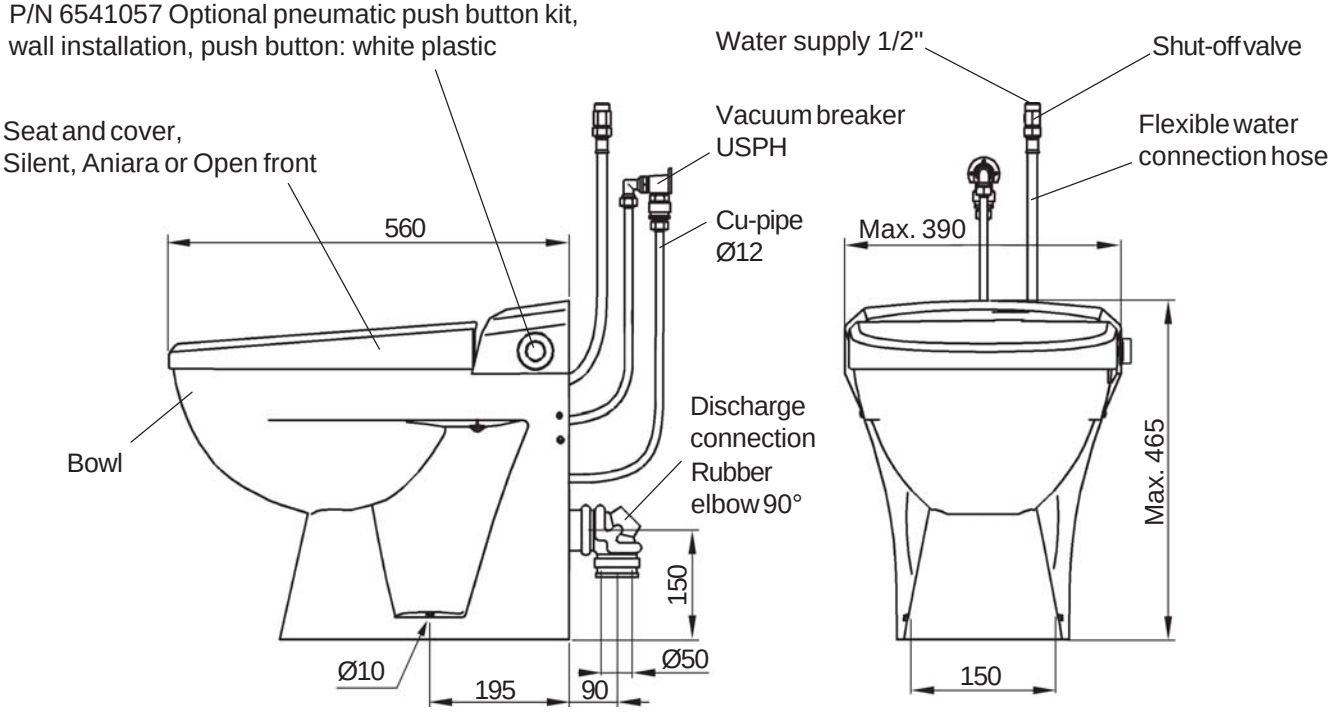


**Materials**

Bowl: White vitreous china*
Seat; Silent: PP*, Aniara: PP*, Open front: UF-S*
Cover; Silent: PP*, Aniara: PP*, Open front: UF-S*
Pneumatic push button: Plastic
Discharge valve: Plastic parts: PP, rubber parts: NR

* See available colours on document 002003-2

**Operating data**

Water pressure: 3 ... 10 bar
Operating vacuum: -0.3 ... -0.50 bar
Water consumption: 1.2 ±0.15 litres/flush ( water pressure: 4 bar, vacuum: -0.4 bar )
Air consumption: 60 ±10 litres/flush (normal atmospheric air)

**Connections**

Water supply: 1/2" MPT, flexible hose
Discharge: Rubber elbow 90°, two hose clamps are included in the rubber elbow 90° to O.D. 48-52mm pipe.

**Shipping data**

P/N 6545827 EVAC 910, floor model USPH, Silent:
Net weight: 23.6 ±0.5kg
Shipping weight: 25.6 ±0.5kg
Shipping volume: 0.168m³

P/N 6545828 EVAC 910, floor model USPH, Aniara:
Net weight: 21.7 ±0.5kg
Shipping weight: 23.7 ±0.5kg
Shipping volume: 0.168m³

P/N 6545829 EVAC 910, floor model USPH, Open front:
Net weight: 23.6 ±0.5kg
Shipping weight: 25.6 ±0.5kg
Shipping volume: 0.168m³

EVAC reserves the right to make alterations to this specification without prior notice.
© Copyright Evac Oy. All rights reserved.