FRAME	APPROX. OIL CAPACITY	
	VERTICAL	HORIZONTAL
22 & 24	0.10 Litres	0.18 Litres
32,33,36	0.25 "	0.47 "
42,45,47	0.37 "	0.67 "
53,56,59	0.47 "	0.82 "

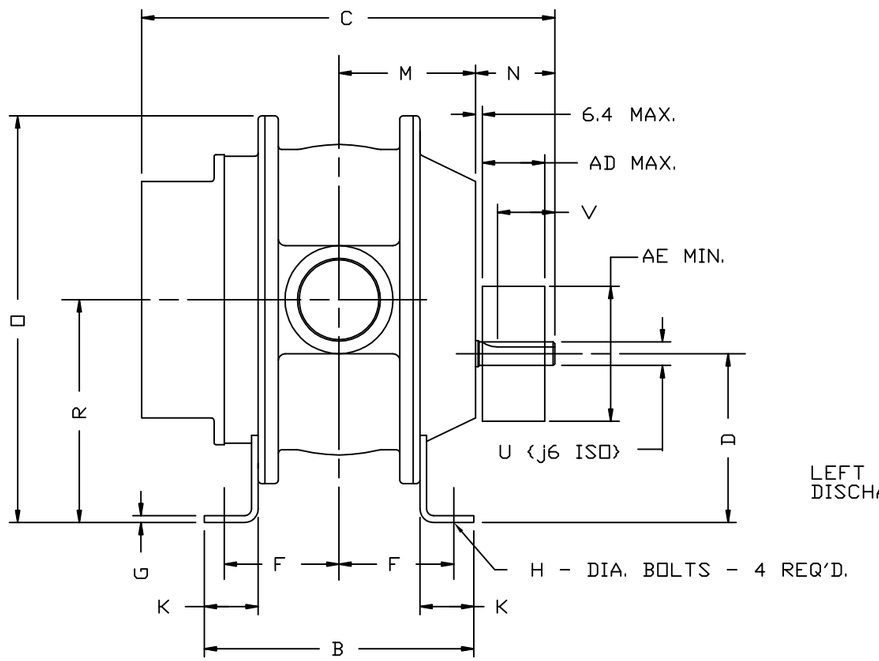

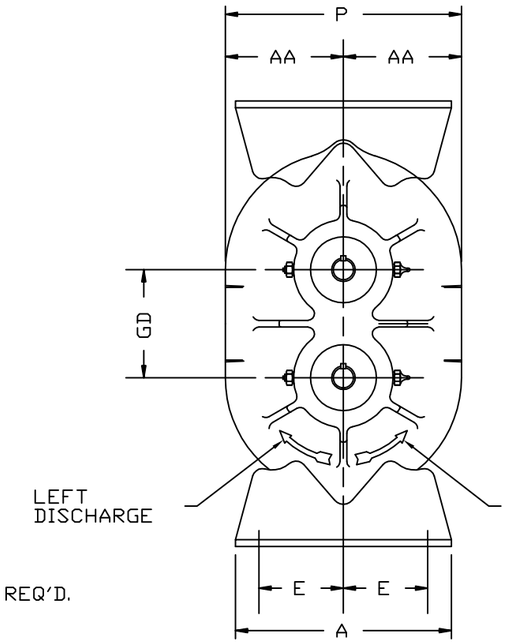

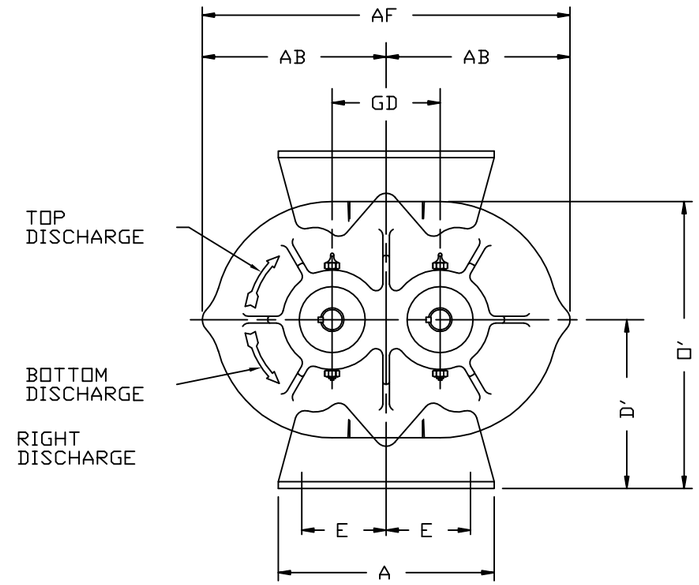

W - INLET & DISCHARGE
AD - SHEAVE WIDTH
AE - SHEAVE DIAMETER

ALL DIMENSIONS IN mm

METRIC UNIVERSAL RAI ® BLOWER

H

FRAME SIZE	GD	A	B	C	D	D'	E MIN.	E MAX.	F MIN.	F MAX.	G	H	K	M	N	O	O'	P	R	U	KEYWAY	W BSP/ISO	V	AA	AB	AD	AE	AF	APPROX. WT. Kg.
22M	63.5	130	127	248	95	95	38	51	51	51	6.4	M10	32	67	64	245	175	159	127	16.008 15.997	5 x 5	1	46	79	118	44.5	102	235	14.5
24M	"	"	178	298	"	"	"	"	76	76	"	"	"	92	"	"	"	"	"			2	"	"	"	"	"	"	19.5
32M	88.9	184	171	286	127	127	64	73	65	71	6.4	M12	44	86	62	325	225	197	171	19.009 18.996	6 x 6	1-1/4	41.5	98	154	48.5	127	308	31.5
33M	"	"	194	308	"	"	"	"	76	83	"	"	"	97	"	"	"	"	"			2	"	"	"	"	"	"	33.5
36M	"	"	254	371	"	"	"	"	106	113	"	"	"	127	65	"	"	"	"			2-1/2	44.5	"	"	"	"	"	46.5
42M	101.6	203	184	330	159	159	76	79	64	79	7.9	M12	51	93	81	383	270	222	210	24.009 23.996	8 x 7	1-1/2	50.8	111	173	58.5	127	346	40.0
45M	"	"	254	394	"	"	"	"	90	108	"	"	"	129	75	"	"	"	"			2-1/2	"	"	"	"	"	"	49.5
47M	"	"	298	448	"	"	"	"	117	137	"	"	"	151	84	"	267	216	"			3	"	108	"	"	"	"	58.0
53M	127	267	213	391	159	171	89	89	81	94	6.4	M12	48	114	94	441	302	260	222	28.009 27.996	8 x 7	2-1/2	63.5	130	219	77.5	153	438	65.0
56M	"	"	279	457	"	"	"	"	108	127	"	"	"	148	86	"	311	279	"			4	"	140	"	"	"	"	77.0
59M	"	"	356	533	"	"	"	"	152	165	"	"	"	186	98	"	"	"	"			4	"	"	"	"	"	"	92.5

CONFIDENTIAL AND PROPRIETARY: THIS DRAWING IS CONFIDENTIAL AND IS THE PROPERTY OF HOWDEN ROOTS, LLC. THE DRAWING OR ANY PART THEREOF MUST NOT BE COPIED OR OTHERWISE REPRODUCED OR DIVULGED TO ANY OTHER PARTY, OR USED FOR MANUFACTURE OR OTHER PURPOSE WITHOUT THE EXPRESS PERMISSION OF THE COMPANY.

MFG. REF. : | SPEC SECTION: | ENGINEER CO: | MAT'L : | PATT. No. | GEOMETRIC TOLERANCE PER: EP938 | ORDER No.

	REVISIONS	BY	DATE M/D/Y	CHANGE NOTICE	CHKD	APP
B	UPDATED TO ACAD, HOWDEN	MPM	2/16/16	16916V		MNM
A	RELEASED					

CERTIFIED
PURCHASE ORDER:
PROJECT:
LOCATION:
EQUIPMENT No. :
CERTIFIED BY:
DATE (M/D/Y) :

CAD FORMAT: AUTO CAD | CAD FILE / DIRECTORY: 73288A61 / XXAD

DR.	RVE	3/23/92
CHKD.	DB	
APP.	AGP	
DBV.		
SCALE	NTS	DATE M/D/Y

DIMENSIONAL TOLERANCES PER UNLESS OTHERWISE SPECIFIED T1
T1: TWO PLACE DECIMALS (.XX) —±.015; THREE PLACE DECIMALS (.XXX) —±.005; FRACTIONAL—±1/64
T2: ANCHOR BOLT LOCATIONS ±.13; BLOWER INLET & DISCHARGE LOCATIONS ±.25; ALL OTHER DIMENSIONS REFERENCE

DO NOT SCALE FOR DIMENSIONS
ALL DIMENSIONS SHOWN IN BRACKETS [ ] ARE MILLIMETERS

FINISH IN μ INCHES

THIRD ANGLE PROJECTION

DIMENSIONAL DRAWING
METRIC UNIVERSAL RAI BLOWER

Howden
Connersville, IN USA
P: 765-827-9200 F: 765-827-9266

73288061
SHEET 1 OF X
REV B

BSIZE