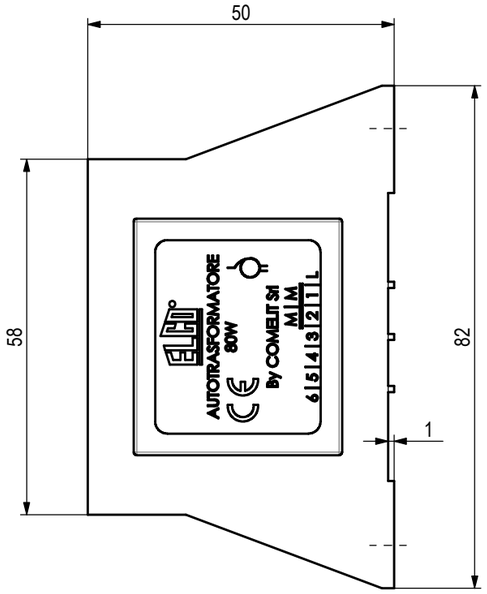

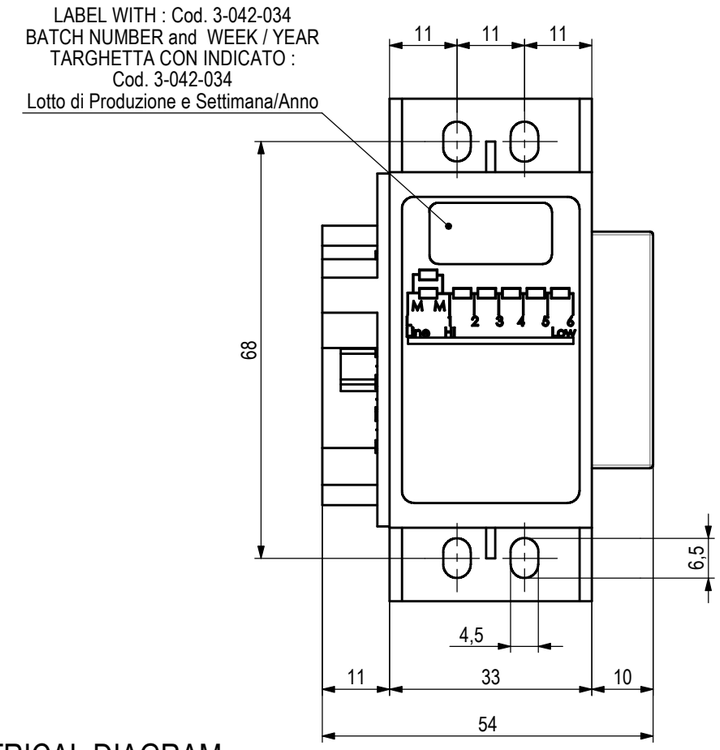

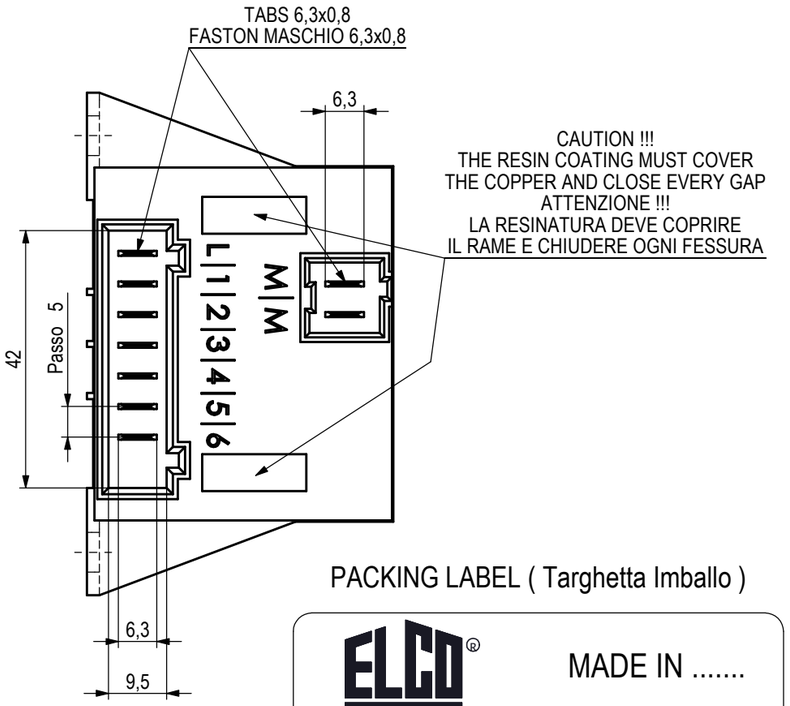

PACKING LABEL (Targhetta Imballo)

ELCO®

MADE IN .....

TYPE AUTOTRASFORMER 80W

CODE 3042034 / IMB Pz.30

ELECTRICAL DIAGRAM

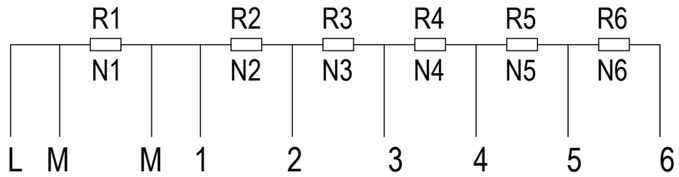

COMELIT
9953D005

PACKING : 30 Pcs BOX (BY SUPPLIER) SEE DIAGRAM 3-264-131
IMBALLO : SCATOLE (DEL FORNITORE) DA 30 Pz. VEDI SCHEMA 3-264-131

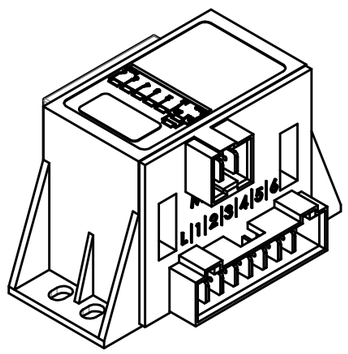

MEASURED VOLTAGES ON TABS TERMINALS M-M
FEEDING AMONG THE TABS TERMINALS L
AND EVERY TABS TERMINALS 1 TO 6
Tensioni misurate a vuoto sui terminali M-M alimentando
tra il terminale L e ciascuno dei terminali da 1 a 6

VL1 = 230V	VMM = 230,0V ±3%
VL2 = 230V	VMM = 191,0V ±3%
VL3 = 230V	VMM = 182,0V ±3%
VL4 = 230V	VMM = 173,0V ±3%
VL5 = 230V	VMM = 147,0V ±3%
VL6 = 230V	VMM = 131,0V ±3%

R = RESISTANCE - (Resistenza)
N = TURN WINDING NUMBER
(Numero di Spire)
Ø = COPPER WIRE DIAMETER
(Diametro del Filo Rame)

R1 = 132,0 Ω	N1 = 1900	Ø1 = 0,18
R2 = 24,5 Ω	N2 = 390	Ø2 = 0,18
R3 = 7,0 Ω	N3 = 110	Ø3 = 0,18
R4 = 7,8 Ω	N4 = 127	Ø4 = 0,18
R5 = 26,0 Ω	N5 = 446	Ø5= 0,18
R6 = 20,0 Ω	N6 = 360	Ø6 = 0,18

TECHNICAL FEATURES
CARATTERISTICHE TECNICHE
Sheet (Lamierino) : 18X EI54
Shell (Carcassa) : VAMPAMID 66 2530 V0 P Black GW
PA66 resin 25% glass fiber reinforced
Resin Coating (Resinatura) : Elan-tron PU 501HR / PH27
Two component self-extinguishing system UL94 V0
Tabs Terminals (Connessioni) : 6,3x0,8 TABS (Faston Maschi)
Power (Potenza) : 80 W
Frequency (Frequenza) : 50 / 60 Hz

Rel.	Date	Description	Executor signature	Checked
C	23-05-2018	RIFATTO LUCIDO SU SOLIDWORKS - AGGIORNATO DESCRIZIONE MATERIALE CARCASSA IN PLASTICA E COPERCHIO	Pedrini R.	F. Crippa
B	07-03-2001	AGGIUNTO IL CODICE FORNITORE	Mariani	Manzoni T.
A	20-12-2000	MODIFICATO VALORI RESISTENZE	Apruzzese M.	Manzoni T.

M O D I F I C A T I O N S

For dimension without tollerance see standard UNI EN 22768-mK

Treatement .
Material .

A3

ELCO®

Drawn Mariani
Date 12-07-2000
Check Manzoni T.
Scale ---

AUTOTRANSFORMER 80W
TABS 6,3x0,8 (Faston Maschi)
Autotrasformatore 6 Velocità Resinato

Weight gr. .
Ref. No .

Release C

3-042-034
3-042-034 / IMB

DRAWING MADE BY CAD HAND MADE MODIFICATIONS ARE FORBIDDEN
THIS DRAWING IS OUR PROPERTY. ANY PARTIAL OR COMPLETE COPY IS FORBIDDEN WITHOUT PREVIOUS WRITTEN AUTHORISATION