ID 985

electronic controllers for “ventilated” refrigeration units

GB

cod. 9IS44048
rel. 4/06

USER INTERFACE

The user has a display and four buttons for controlling instrument status and programming.

At start-up the instrument performs a Lamp Test; the display and LEDs flash for a few seconds to check that they are working correctly. The instrument has two main menus: the Machine Status menu and the Programming menu.

ACCESSING AND USING MENUS

The resources are arranged in a menu that can be accessed by pressing and quickly releasing the “set” button (Machine Status menu) or holding down the “set” button for more than 5 seconds (Programming menu). To access the contents of each folder indicated by the relevant label, just press the “set” button once.
You can now scroll through the contents of each folder, modify it or use its functions.
If you do not use the keyboard for over 15 seconds (time-out) or if you press the “fnc” button once, the last value shown on the display is confirmed and you are taken back to the previous screen mask.

MACHINE STATUS MENU
(See Machine Status Menu Diagram)

To access the Machine Status menu, press the “set” button and quickly release it.
If no alarms are present, the label “SEt” appears. By using the “UP” and “DOWN” buttons you can scroll through the other folders in the menu:
-AL: alarm folder (if alarms present, except for faulty probes/probe errors and COH);
-SEt: Set point setting folder.
-Pb1: probe 1 value folder;
-Pb2: probe 2 value folder;
-Pb3: probe 3 value folder (if present);

Set setting

Access the “Machine Status” menu, press the “set” button and quickly release it. The “Set” folder label appears. To display the Set point value, press the “set” button again.
The Set point value appears on the display. To change the Set point value, use the “UP” and “DOWN” buttons within 15 seconds. If the parameter is LOC = y the Set point cannot be changed.

Alarm on

If an alarm condition exists when the Machine Status menu is accessed the “AL” folder label appears (see section on “Diagnostics”).
NOTE: Always use the “set” button to confirm the hours/minutes/days setting.
NOTE2: We recommend considering the first day d00 as SUNDAY.

PROGRAMMING MENU
(See Programming Menu Diagram)

1) Displaying level 1 parameters

To access the Programming menu, hold the “set” button for more than 5 seconds. If specified, the level 1 access PASSWORD will be requested (see parameter “PA1”) and (if the password is correct) the label of the first folder will appear. If the password is incorrect, the display will show the PA1 label again.
When the instrument is on stand-by, parameter programming can be accessed with the display both on and off.
Use the “UP” and “DOWN” buttons to scroll through the other folders; **the folders will only display level 1 parameters**.
NOTE: at this point level 2 parameters are NOT visible even if NOT password-protected.

BUTTONS AND DISPLAY

UP button
Scrolls through the menu items
Increases values
Activates manual defrosting
(see H31 parameter)

DOWN button
Scrolls through the menu items
Decreases the values
Parameter programmable
(see H32 parameter)



fnc button
ESC function (quit)
Parameter programmable
(see H33 parameter

Set button
Accesses Set point
Accesses the Menus
Confirms the commands
Displays the alarms (if active)
Stores hours/min

LEDs

Position	Associated function	Status
eco	Set point/Reduced set point	ON for parameter programming level 2 blinking when reduced set point is entered (set point ON for setting set point)
	Compressor or relay 1	ON for compressor on; blinking for protection delay or enabling blocked
	Defrosting	ON when defrosting in progress; blinking when activated manually or by digital input
	Alarm	ON for active alarm; blinking for silenced alarm
	Fans	ON when fan is on
aux	aux	ON when auxiliary output is operating

2) Displaying level 2 parameters

Go to the “CnF” folder in the Programming Menu and scroll down the parameters until you reach the PA2 label. By pressing and releasing the “set” button you will enter the level 2 parameters and the label of the first folder in the programming menu will appear.
Level 2 parameters can be protected by a second password (see “PA2” parameter in “diS” folder, not to be confused with PA2 label in the “CnF” folder). If specified, level 2 parameters are hidden from the user; when accessing the “CnF” folder the level 2 access PASSWORD will be requested and (if the correct password is entered) the

label of the first folder in the programming menu will appear.
NOTE: At this point the folders will only display all the level 2 parameters. Therefore level 1 parameters will only be visible if you quit the Programming Menu and repeat procedure 1).
To enter the folder, press "set". The label of the first visible parameter will appear. To scroll through the other parameters, use the "UP" and "DOWN" buttons. To change the parameter, press and release "set", then set the desired value using the "UP" and "DOWN" buttons and confirm with the "set" button. Move on to the next parameter.
NOTE: We strongly recommend that you switch the instrument off and on again each time parameter configuration is changed in order to prevent malfunctioning of the configuration and/or ongoing timings.

PASSWORD
Passwords "PA1" and "PA2" allow level 1 and level 2 parameters to be accessed. There are no passwords in the standard configuration. To enable them (value ≠0) and assign them the desired value, access the Programming menu in the "diS" folder. If passwords are enabled, they will be requested:
- PA1 when entering the Programming menu (see the "Programming Menu" section);
- PA2 in the "Cnf" folder containing the level 1 parameters.

FnC FUNCTION FOLDER
The FnC folder (last folder visible from the Programming Menu, level 1) contains the following functions.
They are activated using the "set" button
If the unit is switched off, the function labels go back to their default status.

Function	Label function ACTIVE	Function Label NOT ATTIVA
Reduced set point	OSP	SP**
Aux	Aon	AoF
Pressure switch alarm reset	rAP	rAP

**default

ACTIVATING MANUAL DEFROST CYCLE
To activate the defrost cycle manually, press the "UP" button (if configured =1) for 5 seconds. If the right defrosting conditions are not present (the temperature of the evaporator probe is higher than the end of defrost temperature, for example) or parameter OdO≠0, the display will flash three (3) times to indicate that the operation will not be performed.

USING THE COPY CARD
The Copy Card is an accessory connected to the TTL serial port and used for quick programming of the unit parameters (upload and download parameter map to one or more units of the same type).
Operations are described below:
Fr-Format (level 2 parameter)
This command can be used to format the copy card **necessary** when used for the first time or when used with models that are not compatible. Warning: when the copy card has been programmed all the data entered is cancelled when the "Fr" parameter is used. This operation cannot be undone.
UL-Upload
This operation uploads the programming parameters from the instrument.
dL-Download
This operation downloads the programming parameters to the instrument.
NOTE:
• UPLOAD: instrument —> Copy Card
• DOWNLOAD: Copy Card —> instr.
The operations are performed by accessing the folder identified by the "FPr" label and selecting the "UL", "dL" or "Fr" commands. The operation is confirmed by pressing the "set" button.
If the operation is successful, a "y" is displayed whereas if it is unsuccessful an "n" will be displayed.
Download "from reset"
Connect the Copycard with the instrument OFF
When the instrument is switched on the programming parameters will be downloaded; when the lamp test has been completed, the following appear on the display for about 5 seconds:
• label dLY if copy operation is successful
• label DLn if operation fails
NOTE: after downloading the instrument will work with the parameter map settings that have just been downloaded.
KEYBOARD LOCKED
Keyboard operating can be locked by programming the "Loc" parameter (see folder with "diS" table). If the keyboard is locked you can access the Programming Menu by pressing the "set" button.
The Set point can also be displayed.

ADVANCED FUNCTIONS

DOOR SWITCH INPUT
This is a clean contact digital input with programmable polarity. The door switch input functions are controlled by the values of the following parameters:

Par	Description
dOd	Digital input switches off loads
dAd	D.I. activation delay
OAO	Alarm signal delay after disabling the digital input (door closed)
tdO	Time out door open. Time out signalled when D.I is activated. (door open)
dOA	Forced behaviour from digital input
PEA	Enables forced behaviour from door switch and/or external alarm
dCO	Delay in enabling compressor with consensus
dFO	Delay in enabling fans with consensus
H11	Digital output configurability/polarity 1
H21...H25	Digital output configurability 1...5

If activation state forcing is enabled (dOA is not 0), the compressor and/or fan outputs can be activated when the time set in parameters dCO and dFO expires.

Parameter H11 is used to configure the digital input with values between -9 and +9. Positive and negative values are used to select the polarity assigned to the input and:
NOTE:
the sign "-" indicates that the input is activated when the contact is closed
The '+' sign indicates that the input is activated when the contact is open

DEVICE STAND-BY CONTROLLER
This controls the operating mode of the device when it is on stand by according to the following parameters:

Par	Description
PAO	alarm exclusion at start-up
OdO	Output delay from power-on
H08	Operating mode in stand-by.

The Stand-by controller can be digital input or button enabled if suitably configured.
The status of the instrument when on stand-by is determined by the value of parameter H08. Three possible operating modes are defined:
EXAMPLE 1: the display is off and the controllers active, the instrument signals any alarms by reactivating the display - OFF DISPLAY
EXAMPLE 2: the display is off and all the controllers, including the alarms, are also disabled - STAND-BY
EXAMPLE 3: the display shows the "OFF" label and all the controllers, including the alarms, are also disabled- STAND-BY

DEFROST CONTROL
The instrument can be used to select different types of defrosting with the parameter **dty, defrost type**.
(defrost execution mode).
The dty parameter can have these values:
0 = electrical defrosting; the compressor is turned off.
1 = cycle reversing defrosting (hot gas); the compressor continues operating.
2 = Free mode defrosting (compressor dis abled).

Configuration of 3rd probe as 2nd evaporator probe
The 3ª probe can be used to control the defrosting of a second evaporator by configuring a relay output as a 2nd evaporator defrost relay (see par. H21...H26).
To implement this function:
a) configure the 3rd probe in 2nd evaporator defrost control mode (par. H43=2EP).
b) configure a relay output as 2nd evaporator defrost relay (configuration parameters H21...H26).
c) define the defrost mode by setting parameter H45.

Start of defrosting
If two evaporators are used, defrosting starts in three different ways that are

determined by parameter H45.
• H45=0: Defrosting is enabled by controlling the temperature of the 1st evaporator so it is lower than parameter dSt,
•H45=1: Defrosting is enabled by controlling so that at least one of the two probes is below its end of defrosting temperature (dSt for the 1st evaporator and dS2 for the 2nd evaporator)
• H45=2: Defrosting is enabled by controlling so that both the probes are below their respective end of defrosting set points (dSt for the 1st evaporator and dS2 for the 2nd evaporator)
The probe error condition is considered the defrost calling probe.
When defrosting is terminated by a probe or is timed out (see par. dEt), dripping follows (see par. dt).

End of defrosting
If two evaporators are used, defrosting ends when both the probes have reached or exceeded their respective end of defrosting set points (dSt for the 1st evaporator and dS2 for the 2nd evaporator)
If one or both the probes are faulty, defrosting is ended by a time-out.
NOTE:
• If there are no conditions for defrosting, the request is ignored.
Defrosting of a single evaporator ends when the value read by the respective probe is equal to or higher than the end of defrosting temperature or a time-out occurs. Dripping starts when both defrosts have been completed.
• If one or both the probes are faulty, defrosting in the corresponding evaporator is ended by a time-out.
The start of defrosting is permitted when the corresponding temperature is lower than the corresponding set point (dSt or dS2).
• If probe 3 is not configured as a probe on the second evaporator (H43≠2), defrosting on the second evaporator occurs if a digital output is configured to control defrosting on the second evaporator (see par. H21..H25). If this is the case, defrosting is confirmed (as if ST3<dS2) and ends with a time-out. The fan controller remains unchanged.

GENERAL PRESSURE SWITCH INPUT CONTROLLER
This controller performs diagnostics on an associated digital input using a configuration table. It is activated by setting parameters H11 and H12 = 9.
If the pressure switch input trips, the compressor loads are immediately deactivated, the alarm LED lights up to signal tripping and the label nPA in the alarm folder appears on the display.
Controlling is performed using 2 parameters PEn and PEI:

Par.	Description
PEn	number of errors allowed per maximum/ minimum pressure switch input switch input (number)
PEI	Minimum/maximum pressure switch error count time (minutes)

nPA is a subfolder of AL (Alarms), and keeps a record of each time the pressure switch is activated if the value indicated by PEn is reached in a period of time that is less than or equal to PEI, the label nPA is replaced by PA (pressure alarm).
The alarm conditions only occurs when the maximum number of alarms is reached before the time indicated by parameter PEI expires. As soon as the first alarm occurs, the time PEI is calculated.
If the number of times the pressure switch is activated exceeds the number established PEn in the period PEI:
- compressor outputs, fans and defrosting are deactivated
- the label PA is displayed in the folder AL
- the alarm LEDs and alarm relay if configured are switched on.

NOTE: Once the device is in alarm mode, it must be switched off and on again or reset by activating the rAP parameter in the functions menu. The nPA folders can be reset using the rPA function in the Fnc folder.

NOTE: If parameter PEn is set to 0 the function is excluded and the alarms and counts are disabled.

CONDENSER FAN CONTROLLER
This controller is associated with probe Pb3 and features:
- operating set point
- operating differential
- exclusion of fans in defrosting mode
- start-up delay after end of defrosting If a digital output is set as condenser fans (H21...H24=10) the output will behave as shown below:

Output Value	Pb3 Value
ON	≥ SCF OFF
	≤ SCF - dCF

If probe Pb3 is not present and alarm E3 is active, the controller will always be on during the defrost cycle.
Probe 3 can be excluded and the failed connection with the instrument will not trigger an error message.
NOTE: During dripping time the output is OFF.
NOTE: If a digital output is programmed as condenser fans (H21...H25 =10) parameter SA3 is always an absolute value irrespective of the value of parameter Att.

DIAGNOSTICS

The alarm condition is always signalled by a buzzer (if present) and the alarm icon LED. The alarms from the faulty thermostat control probe (probe 1), the faulty evaporator probe (probe 2), and the faulty display probe (probe 3) appear directly on the instrument display as E1, E2, and E3 respectively.

Table of faulty probes

DISPLAY	FAULT
E1	Faulty probe 1 (thermostat control)
E2	Faulty probe 2 (1st evaporator)
E3	Faulty probe 3 (display or 2nd evaporator)
If simultaneous, they will be showed on the display alternately every 2 seconds	

An error condition in probe 1 (thermostat control) causes the following:
• E1 code appears on display
• compressor is activated as indicated by "Ont" and "Oft" parameters if these are programmed for duty cycle or:

Ont	Oft	Compressor output
0	0	OFF
0	>0	OFF
>0	0	ON
>0	>0	dc

The error condition for probe 2 (evaporator) causes the following:
• E2 code appears on display
• end of defrost due to time-out.

The error condition for probe 3 (display) causes the following:
• E3 code appears on display Other alarms do not appear on the instrument display but can be seen in the "Machine Status" menu in the "AL" folder.
The maximum and minimum temperature alarm is regulated according to the thermostat control probe (probe1) and/or display probe (probe 3). The temperature limits are defined by the "HAL" (maximum alarm), "LAL" (minimum alarm) and PbA (alarm configuration on probe 1,3 or both) parameters.

MAXIMUM AND MINIMUM TEMPERATURE ALARM
If an alarm condition occurs and alarm exclusion times are not in progress (see alarm exclusion parameters), the alarm icon lights up permanently and the relay that is configured as an alarm is activated. This type of alarm does not affect the regulating in progress.
Alarms are considered as absolute (default) values or as values related to the Set point (the distance from the Set point itself) and based on the Att parameter.
If the alarms are relative (Att=1), the parameter HA1 is set to positive values and LA1 to negative values.
This alarm condition can be viewed in the folder "AL" with labels "AH1-AL1".

ALARM WITH THRESHOLD (PROBE 3)
By setting the PbA=3 parameter an alarm is associated to probe 3. It refers to a specific threshold (defined by the SA3 parameter). An over-temperature or an under-temperature alarm is generated and the icon is turned on. This alarm condition can be viewed in the "AL" folder with the labels "AH3-AL3".
When you set parameter PbA=4, probe 3

is assigned a “Compressor Over Heating” alarm which is triggered when the value of parameter SA3 is exceeded. The label “COH” will appear on the display , the LED will light up and the buzzer will sound (if enabled). The compressor relay will be disabled at the same time.The alarm is overridden automatically when the temperature returns to a value equal to SA3 (set point) minus dA3. The compressor will be free to restart (if required and in line with all relative safety measures).
The alarm is handled as a temperature alarm referring to probe 3: for delays and backswings, refer to standard alarms. The alarm is not active during defrosting.

DEFROST ALARM

If the end of defrosting is due to a time-out (rather then because an end of defrosting temperature is detected by the defrosting probe), an alarm is generated and the icon lights up.
This condition can be viewed in the “AL” folder with the label “Ad2”.
Automatic back swinging occurs when the next defrost starts. By pressing any button during the alarm condition, the signal light disappears. Once the next defrost cycle has been completed and the end of defrost temperature has been reached, the alarm will be definitively cancelled.

EXTERNAL ALARM

The device can also control an external alarm, i.e. from a digital input. If the digital input is enabled, the alarm control is activated by programming and remains enabled until the next time the digital input is deactivated. When an alarm is set off, the alarm icon lights up permanently, a buzzer (if present) and the relay configured as alarm are activated and the compressor, defrost and fan controllers are deactivated according to the value of the **rLO** parameter):
This alarm condition can be displayed in

Value	Description
0	no resources are disabled
1	disables compressor and defrosting
2	disables compressor, defrosting and fans

the “AL” folder using the “EA” label. The relay can be silenced; even if the alarm icon starts blinking, the controllers remain locked until the next time the digital input is deactivated.

OPEN DOOR ALARM

If a door is open, the Open Door alarm is signalled in response to a delay defined by the tdO parameter. The alarm is signalled by the flashing alarm icon. This alarm condition can be viewed in the “AL” folder with the label “Opd”.
NOTE: Do not set parameter tAo to zero when the door is closed since if the door is continually opened and closed, any alarms would never be signalled.

DISPLAY	ALARM
AH1	High temperature alarm (referring to room probe or probe 1)
AL1	Low temperature alarm (referring to room probe or probe 1)
AH3	High temperature alarm (referring to probe 3)
AL3	Low temperature alarm (referring to probe 3)
Ad2	Defrosting timed out
EA	External alarm
Opd	Door Open Alarm

Press any button to silence the alarm. The LED will start to blink. If simultaneous, they will be showed on the display alternately every 2 seconds

ELECTRICAL CONNECTIONS

Warning! Always switch off machine before working on electrical connections.
The instrument has screw terminals for connecting electrical cables with a maximum diameter of 2.5 mm^2 (only one conductor per terminal for power connections): for terminal capacity, see the label on the instrument.
The relay contacts are voltage free. Do not exceed the maximum current allowed. For higher loads, use a suitable contactor.
Make sure that the power voltage complies with the device voltage.
Probes have no connection polarity and can be extended using an ordinary bipolar cable (note that if probes are extended this affects the electromagnetic compatibility (EMC) of the instrument: special care must be used when wiring).
Probe cables, power supply cables and the TTL serial cable should be kept separate from power cables.

MECHANICAL ASSEMBLY

The unit has been designed for panel-mounting. Drill a 29x71 mm hole, insert the keyboard and fix it in place with the special brackets provided.

Do not install the instruments in excessively humid and/or dirty locations. They are suitable for use in locations with normal pollution levels.

Always make sure that the area next to the instrument cooling slits is adequately ventilated.

TECHNICAL DATA

ID 985

Front protection: IP65.
Casing: PC+ABS UL94 V-0 resin plastic body, polycarbonate front, thermoplastic resin buttons.
Dimensions: front 74x32 mm, 60 mm depth.
Mounting: on panel, with drilling template 71x29 mm (+0.2/-0.1 mm).
Operating temperature: -5...55 °C.
Storage temperature: -30...85 °C.
Usage ambient humidity: 10...90 % RH (non-condensing).
Storage ambient humidity: 10...90% RH (non-condensing).
Display range: -50...110 (NTC); -55...140 (PTC) °C without decimal point (parameter selectable), on display 3 digits + sign.
Analogue inputs: three PTC or NTC inputs (parameter-selectable).
Digital inputs: 2 voltage-free parameter-configurable digital inputs.
Serial: TTL for Copy Card connection.
Digital outputs:
4 outputs on relays: first output (A) SPDT 8(3)A 250V~, second and third output (B-C) SPST 8(3)A 250V~, fourth output (D) SPST 5(2)A 250V~.
Measurement range: from -55 a 140 °C.
Accuracy: better than 0.5% of bottom scale +1 digit.
Resolution: 1 or 0.1 °C.
Consumption: 3 VA.
Power supply: 12 V~/⎓ ±10% 50/60 Hz

	PAR.	DESCRIPTION	RANGE	DEFAULT	VALUE	LEVEL	U.M.
Compressor controller-CP label	SEt	Set point with range falling between the minimum LSE set point and the maximum HSE set point. The value of the set point is in the machine status menu	LSE...HSE	0.0			°C/°F
	diF	The compressor stops when it reaches the set point value, and restarts at a value corresponding to the set point plus the value of the differential It must not be 0	0.1...30.0	2.0		1-2	°C/°F
	HSE	Maximum set point value	LSE...302	50.0		1-2	°C/°F
	LSE	Minimum set point value	-55.0...HSE	-50.0		1-2	°C/°F
	OSP	Offset point. Value to be added to set point if reduced set point is activated (economy function).	-30.0...30.0	0		2	°C/°F
	Cit	Minimum compressor ON time. Minimum time for activating a compressor before deactivation Not active if=0	0...250	0		2	min
	CAt	Maximum compressor ON time. Maximum time for activating a compressor before deactivation Not active if=0	0...250	0		2	min
	Ont (1)	Compressor activation time if probe is faulty. If set to 1 with OFt=0 the compressor always remains on whereas if Oft>0 it operates in duty cycle mode (see Duty Cycle diagram)	0...250	0		1-2	min
	OFt (1)	Compressor shut-down time if probe is faulty. If set to 1 with Ont=0 the compressor always remains off whereas if Oft>0 it operates in duty cycle mode (see Duty Cycle diagram)	0...250	1		1-2	min
	dOn	Delay in activating compressor relay after start-up	0...250	0		1-2	sec
	dOF	Delay after shut-down; between compressor relay shut-down and subsequent start-up the specified time must elapse.	0...250	0		1-2	min
	dbi	Delay between switch-ons; the specified time must elapse between two subsequent switch-ons	0...250	0		1-2	min
	OdO	Delay in enabling outputs after start-up of instrument or after a power failure. Not active if=0	0...250	0		1-2	min
Defrosting controller-deF label	dty	Type of defrost. 0 = electrical defrosting; 1 = cycle reversing defrosting (hot gas); 2 = Free mode defrosting (compressor disabled).	0/1/2	0		1-2	flag
	dit	Period of time elapsing between the start of two defrosts 0=function disabled	0...250	6		1-2	hours
	dt1	Unit of measurement for defrost times (par. dit) 0="dit" expressed in hours 1="dit" expressed in minutes 2="dit" expressed in seconds	0/1/2	0		2	flag
	dt2	Unit of measurement for duration of defrosting (dEt parameter) 0= "dEt" parameter expressed in hours 1= "dEt" parameter expressed in minutes 2= "dEt" parameter expressed in seconds	0/1/2	1		2	flag
	dCt	Selection of defrosting time count mode. 0=compressor operating hours DIGIFROST® method). Defrosting active only if compressor is on. 1 = equipment operating hours; defrost counting is always active when the machine is on 2=compressor stop Each time the compressor stops a defrosting cycle is performed according to par. dtY	0/1/2	1		1-2	flag
	dOH	Delay between start of first defrosting operation and start-up of instrument.	0...59	0		1-2	min
	dEt	Defrosting time-out; determines maximum duration of defrosting.	1...250	30		1-2	min
	dSt	End of defrost temperature (determined by evaporator probe)	-50.0...150	8.0		1-2	°C/°F
	dE2	Defrost time-out on 2nd evaporator	1...250	30		1-2	min/sec
	dS2	End of defrost temperature on 2nd evaporator	-50.0...150	8.0		1-2	°C/°F
	dPO	Determines when instrument starts up if the defrosting cycle must be activated (if the temperature on the evaporator allows this) y=defrosting activated at start-up n=defrosting not activated at start-up	n/y	n		1-2	flag
	tcd	Minimum time for each compressor state before defrosting "Ontime if >0; "Offtime if >0	-31...31	0		2	min
	Cod	Compressor "Off" time before defrost cycle. The compressor is not turned on if a defrost cycle is expected in the time indicated by the parameter. 0=Function excluded	0...60	0		2	min

NOTE: At level 1 the folders will only display all the level 1 parameters. At level 2 the folders will only display all the level 2 parameters. The level marked 1-2 allows the parameter to be displayed at both levels.

	PAR.	DESCRIPTION	RANGE	DEFAULT	VALUE*	LEVEL**	U.M.
Fan controller-FAn label (3)	FPt	Determines if “FSt” and “Fot” are expressed as absolute values or in relation to set point 0=absolute value; 1=value related to set point	0/1	0		2	flag
	FSt	Fan stop temperature. Temperature limit that, if exceeded by the value read by the evaporator probe, stops the fans.	-50.0...150.0	2.0		1-2	°C/°F
	Fot	Fan start temperature. If the temperature read by the evaporator probe is lower than the set value the fans remain off.	-50.0...150.0	-50.0		2	°C/°F
	FAd	Fan activation intervention differential. (see “FSt”, “Fot”)	1.0...50.0	2.0		1-2	°C/°F
	Fdt	Delay before fan activation after defrosting	0...250	0		1-2	min
	dt	Dripping time	0...250	0		1-2	min
	dFd	Disables evaporator fans. y=fans disabled n=fans enabled	y/n	y		1-2	flag
	FCO	Disables fans with compressor off y = fans active (with thermostat; in response to value read by defrost probe, see “FSt” parameter); n = fans off; dc = duty cycle (using parameters “Fon” and “FoF”	n/y/dc	y		1-2	flag
	Fod	Enables fan stop with door open and fan re-start when door is closed (if fans were on). n=fans stop; y=fans unchanged	n/y	n		2	flag
	FdC	Fan shut-down delay after compressor stop 0=function excluded	0...99	0		2	min
	Fon	Fan start-up time in Duty mode Cycle; valid for FCO=dc	0...99	0		2	min
	FoF	Fan shut-down time in Duty Cycle; valid for FCO=dc	0...99	0		2	min
	SCF	Condenser fan set point	-50.0...150.0	10		2	°C/°F
	dCF	Condenser fan differential	-30...30	2		2	°C/°F
	tCF	Condenser fan start-up delay after defrost	0...59	0		2	min
	dCd	exclusion of condenser fans in defrost mode	n/y	y		2	Flag
Alarms-AL label	Att	Determines if “LAL” and “HAL” are expressed as absolute values or as a differential related to the set point 0=absolute value 1=value related to set point	0/1	0		2	flag
	Afd	Alarm differential	1.0...50.0	2.0		1-2	°C/°F
	HAL (4)	Maximum alarm. Temperature limit (whose absolute or relative value status is regulated by “Att”) above which the alarm is activated.	LAL...150.0	50.0		1-2	°C/°F
	LAL (4)	Minimum alarm. Temperature limit (whose absolute or relative value status is regulated by “Att”) below which the alarm is activated.	-50.0...HAL	-50.0		1-2	°C/°F
	PAO (5)	Alarm exclusion time after start-up of instrument following a power failure	0...10	0		1-2	hours
	dAO	Alarm exclusion time after defrosting	0...999	0		1-2	min
	OAO	High and low temperature alarm delay after disabling digital input (door closed)	0...10	0		2	hours
	tdO	Time out after alarm signal when disabling digital input (door open)	0...250	0		2	min
	tAO (5)	Temperature alarm delay time	0...250	0		1-2	min
	dAT	Alarm for defrosting ended due to time out. n=alarm not active y=alarm active	n/y	n		2	flag
	rLO	Controllers disabled by external alarm 0=no resources are disabled 1=disables compressor and defrosting 2=disables compressor, defrosting and fans	0/1/2	0		2	num
	AOP	Polarity of alarm output: 0 = alarm active and output disabled; 1 = alarm active and output enabled	0/1	1		2	flag

NOTE: At level 1 the folders will only display all the level 1 parameters. At level 2 the folders will only display all the level 2 parameters. The level marked 1-2 allows the parameter to be displayed at both levels.

	PAR.	DESCRIPTION	RANGE	DEFAULT	VALUE*	LEVEL**	U.M.
Alarms-AL label	PbA	Configuration of temperature alarm on probe 1 and/or 3: 0=on probe 1 (thermostat control) 1=on probe 3 (display) 2=on probe 1 and 3 (thermostat control and display) 3=on probe 1 and 3 (thermostat control and display) on external threshold 4=Parameter PbA: 4= on probe 3 (COH, compressor overheating)	0/1/2/3	0		2	num
	SA3	Probe 3 alarm set point	-50.0...150.0	50		2	°C/°F
	dA3	Probe 3 alarm differential	-30.0...30.0	2.0		2	°C/°F
Light & digital inputs Lit Label	dSd	Light relay enable from door switch. n = door open, light does not turn on; y = door open, light turns on (if it was off)	n/y	y		2	flag
	dLt	Light relay disabling delay after closing door if “dSd”=y	0...31	0		2	min
	OFL	Light relay disabled even if disabling delay “dLt” is active	n/y	n		2	flag
	dOd	Digital input switches off loads	n/y	n		2	flag
	dAd	Delay in enabling digital input	0...255	0		2	min
	dOA	Forced behaviour from digital input: 0=no enabling; 1=compressor enabled 2=fans enabled; 3=compressor and fans enabled	0/1/2/3	0		2	num
	PEA	Enables forced behaviour from door light and/or from external alarm 0=function disabled; 1=associated with door light 2=associated with external alarm; 3=associated with door light and external alarm	0/1/2/3	0		2	num
	dCO	Delay in enabling compressor with consensus	0...250	0		2	min
	dFO	Delay in enabling fans with consensus	0...250	0		2	min
Display - diS label	LOC	Keyboard locked. Parameters can still be programmed. n= keyboard not locked y= keyboard locked	n/y	n		1-2	flag
	PA1	Contains the password for level 1 parameters. Enabled if not 0	0...250	0		1-2	num
	PA2	Contains the password for level 2 parameters. Enabled if not 0	0...250	0		2	num
	ndt	Display with decimal point. n= without decimal point (only whole numbers) y= with decimal point	n/y	n		1-2	flag
	CA1	Temperature value to be added to that read by probe 1 as specified by parameter CA	-12.0...12.0	0		1-2	°C/°F
	CA2	Temperature value to be added to that read by probe 2 as specified by parameter CA	-12.0...12.0	0		1-2	°C/°F
	CA3	Temperature value to be added to that read by probe 3 as specified by parameter CA	-12.0...12.0	0		1-2	°C/°F
	CAI	Application of offset 0 = modifies the temperature displayed 1 = is added to the temperature used by controllers not the temperature displayed that remains unchanged. 2= adds to temperature displayed that is also used by controllers.	0/1/2	2		2	num
	LdL	Minimum value that can be displayed	-55.0...302	-50.0		2	°C/°F
	HdL	Maximum value that can be displayed	-55.0...302	140.0		2	°C/°F
	ddL	Display during defrosting: 0= displays temperature read by thermostat control probe 1= displays temperature read entering defrost cycle until set point is reached 2= displays “deF” label during defrosting until set point is reached (or when Ldd expires)	0/1/2	1		1-2	flag
	Ldd	Time out for unlocking display (with ddL=2) if defrosting lasts too long	0...255	0		1-2	min
	dro (7)	Select °C or °F to display temperature: 0= °C 1= °F	0/1	0		1-2	flag
	ddd	Value to be displayed: 0 = Set point 1 = probe 1 (thermostat control) 2 = probe 2 (evaporator) 3 = probe 3 (display)	0/1/2/3	1		2	num

NOTE: At level 1 the folders will only display all the level 1 parameters. At level 2 the folders will only display all the level 2 parameters. The level marked 1-2 allows the parameter to be displayed at both levels.

	PAR.	DESCRIPTION	RANGE	DEFAULT	VALUE*	LEVEL**	U.M.
Configuration- CnF label	H00	Selects probe PTC or NTC 0= PTC 1= NTC	0/1	1		1-2	flag
	H02	Quick activation time for functions with configured buttons. Not possible for aux (time expected = 1 second)	0...15	5		2	sec
	H06	Button/input aux/door switch light active when instrument is off	n/y	y		2	flag
	H08	Stand-by operating mode 0= only display switched off; 1= display on and controls locked; 2= display off and controls locked	0/1/2	2		2	num
	H11 (6)	Configuration of digital inputs/polarity: 0= disabled 1 = defrost 2 = reduced set point 3 = auxiliary 4 = door switch 5= external alarm 6= disables storage of HACCP alarms 7= stand-by (On/Off) 8= maintenance request 9= HACCP alarm reset	-9...9	0		2	num
	H12 (6)	Configuration of digital inputs/polarity Same as H11	-9...9	0		2	num
	H21	Digital output 1 configurability: 0= disabled 1= compressor 2= defrost 3= fans 4= alarm 5= auxiliary 6= stand-by 7= light 8= buzzer 9=Defrost 2nd evaporator 10=Condenser fans	0...10	1		2	num
	H22	Digital output 2 configurability Same as H21 (default defrost)	0...10	2		2	num
	H23	Digital output 3 configurability Same as H21 (default fans)	0...10	3		2	num
	H24	Digital output 4 configurability Same as H21 (default alarm)	0...10	4		2	num
	H31	UP button configurability 0=disabled 1=defrost 2=auxiliary 3=reduced set point 4=HACCP alarm reset 5=disables alarm HACCP 6=light 7=stand-by 8= maintenance request	0...8	1		2	num
	H32	DOWN button configurability Same as H31(0=disabled default)	0...8	0		2	num
	H33	ESC button configurability Same as H31(0=disabled default)	0...8	0		2	num
	H40	Enabling inversion of probe 1 and probe 2 0=Pb1 on channel 1, Pb2 on channel 2 1=Pb1 on channel 2, Pb2 on channel 1	0...1	0		2	Flag
	H42	Presence of evaporator probe: n= not present; y= present	n/y	y		2	flag
	H43	Presence of display probe: n= not present y= present (display probe) 2EP= probe on 2nd evaporator	n/y/2EP	n		2	flag
	H45	Start of defrosting for dual evaporator: 0= defrost activated if temperature of 1st evaporator<dSt 1= defrosting activated if at least one of the conditions is met: -temperature 1st evaporator<dSt -temperature 2nd evaporator<dS2 2= defrosting activated if both conditions are met: -temperature 1st evaporator<dSt -temperature 2nd evaporator<dS2	0/1/2	1		2	num
	reL	Device version. Read only parameter	/	/		1-2	/
	tAb	Parameter table; Reserved; Read only parameter	/	/		1-2	/
	PA2	**in the CnF folder you can access level 2 parameters from label PA2 when you enter the correct password by pressing the "set" button**					
Pressure Switch - Fpr	PEn	Number of errors allowed per maximum/minimum pressure switch input	0...15	10		2	num
	PEI	Minimum/maximum pressure switch error count time	1...99	60		2	min
Copy Card Fpr label	UL	Transfer of parameter map from instrument to Copy Card	/	/		1	/
	dL	Transfer of parameter map from Copy Card to instrument	/	/		1	/
	Fr (8)	Formatting. Cancels all data in the Copy Card	/	/		1	/

NOTE: At level 1 the folders will only display all the level 1 parameters. At level 2 the folders will only display all the level 2 parameters. The level marked 1-2 allows the parameter to be displayed at both levels.

FUNCTIONS (folder with "FnC" label)
The FnC folder (last folder visible from the Programming Menu) contains several functions that are activated using the "set" button
SEE FUNCTIONS paragraph

NOTES:
(1) See Duty Cycle diagram
(3) If relative values are present (par. Att=1) parameter HAL is set to positive values and the parameter LAL is set to negative values (-LAL)
(4) Refers exclusively to high and low temperature alarms
(5) when changing from °C to °F or vice versa the set points, differentials, etc. are NOT converted (for example, "set=10 °C becomes set=10°F")
(6) CAUTION: positive or negative values change polarity, Positive values: active input when contact is closed; Negative values: active input when contact is open.
(7) Parameter visible if buzzer is present.
(8) If the Fpr parameter is used, the data previously stored on the Copy Card will be permanently lost. **This operation cannot be undone**
* Value: to be compiled manually by user with any custom settings (if different from default settings)
** Level: indicates the visibility level of parameters accessed using a password (see relevant paragraph)

Duty Cycle Diagram

Ont, OFt parameters programmed for Duty Cycle

Ont	OFt	Compressor output
0	0	OFF
0	>0	OFF
>0	0	ON
>0	>0	dc

The error condition for probe 1 (compressor) causes the following:
• E1 code appears on display
• the controller is activated as indicated by the "Ont" and "OFt" parameters if programmed for the duty cycle

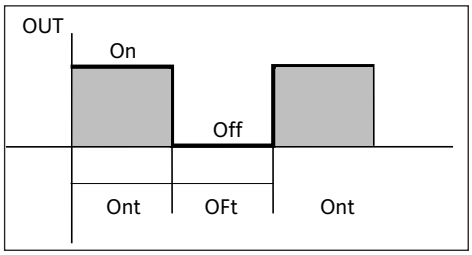

Machine Status Menu Diagram

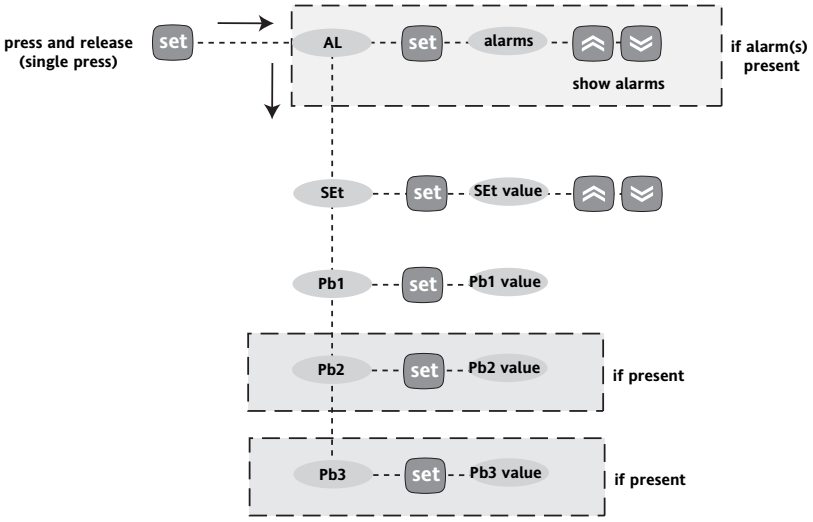

Programming Menu Diagram

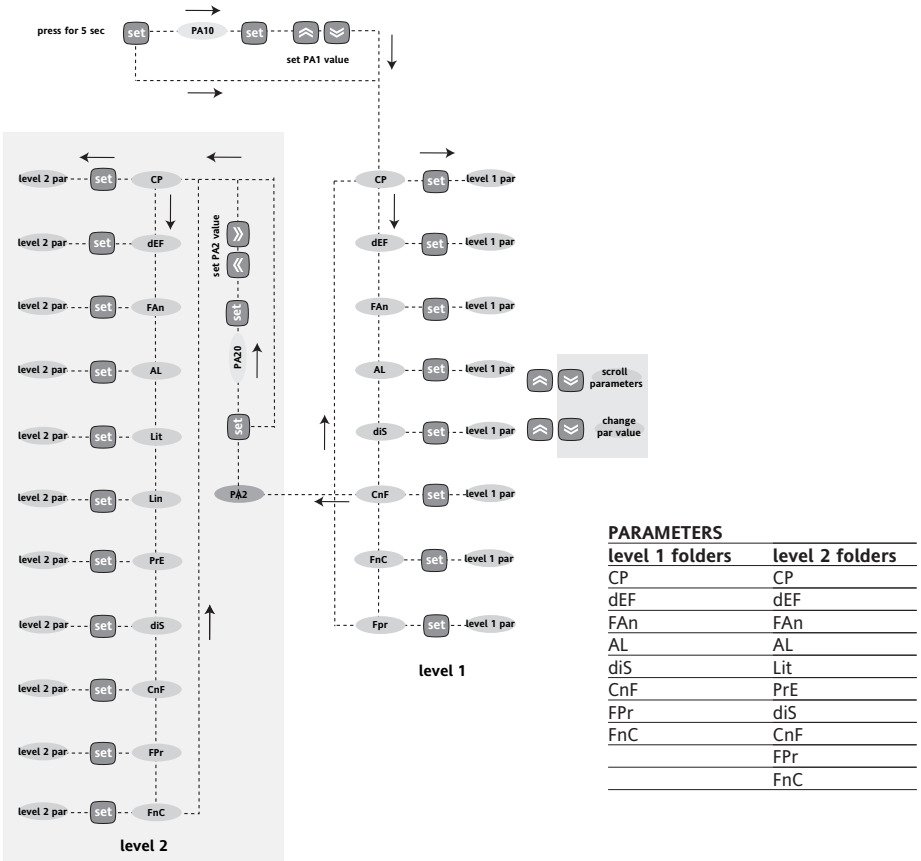

PARAMETERS

level 1 folders	level 2 folders
CP	CP
dEF	dEF
FAn	FAn
AL	AL
diS	Lit
CnF	PrE
FPr	diS
FnC	CnF
	FPr
	FnC

Max/Min. Alarm Diagram (minimum and maximum temperature)

The maximum temperature alarm occurs when the probe temperature is:
(1) higher than or equal to HAL if Att=Ab(solute)
(2) higher than or equal to Set + HAL if Att=rEl(ative)
• if Att=Abs(olute) HAL must be with a sign;
• if Att=rEL(ative) HAL must be only positive.

The minimum temperature alarm occurs when the probe temperature is:
(1) lower than or equal to LAL if Att=Ab(solute)
(2) lower than or equal to Set + LAL if Att=rEl(ative)
• if Att=Abs(olute) LAL must be with a sign;
• if Att=rEL(ative) LAL must be only positive.

***NOTE: if Att=rEL(ative) LAL must be negative: therefore set point+LAL<set point because set+(-|LAL|)=set-|LAL|**

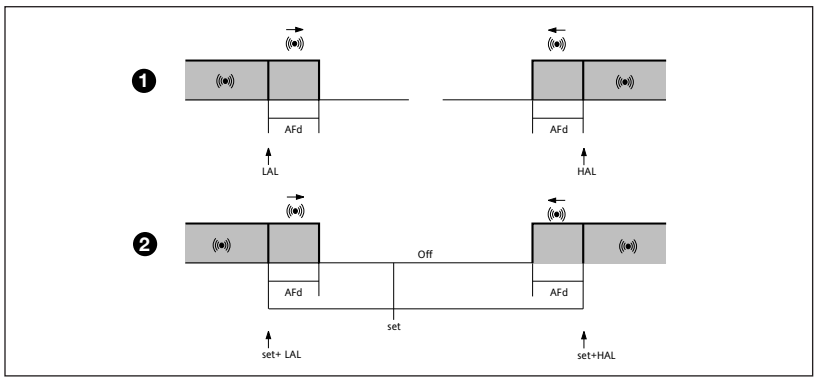

The maximum temperature alarm back swing occurs when the probe temperature is:
(1) lower than or equal to HAL - AFd if Att=Ab(solute)
(2) lower than or equal to + HAL- AFd if Att=rE(lative)

The minimum temperature alarm back swing occurs when the probe temperature is:
(1) higher than or equal to LAL + AFd if Att=Ab(solute)
(2) greater than or equal to set + LAL + AFd if Att=rE(lative)
* (set -|LAL|+AFd)

Wiring Diagram

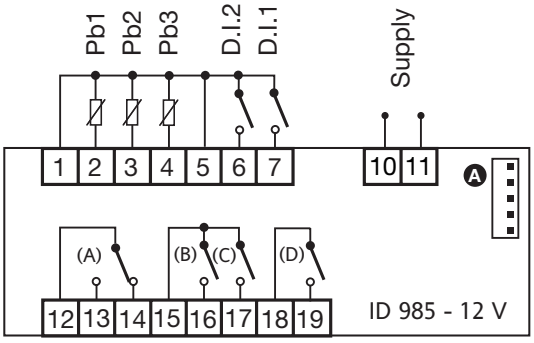

TERMINALS

1 - 2	Probe input 1 (thermostat control)
1 - 3	Probe input 2 (1st evaporator)
1 - 4	Probe input 3 (display or 2nd evaporator see par. H43)
5 - 6	Digital input 2
5 - 7	Digital input 1
10 - 11	Power supply
12 - 13	N.O. relay output (A) see H22 (defrosting default)
12 - 14	N.C. relay output (A) see H22 (defrosting default)
15 - 16	N.O. relay output (B) see H21 (compressor default)
15 - 17	N.O. relay output (C) see H23 (fan default)
18 - 19	N.O. relay output (D) see H24 (alarm default)
A	TTL input for Copy Card

NOTE: The technical characteristics in this document concerning measurements (range, accuracy, resolution, etc.) refer to the instrument in the strictest sense and not to any accessories provided such as probes, for example. This means, for example, that an error introduced by the probe is added to any error that is characteristic of the instrument.

RESPONSIBILITY AND RESIDUAL RISKS

Eliwell Controls S.r.L. shall not be liable for any damages deriving from:
• installation/use other than that prescribed and, in particular, which does not comply with the safety standards specified in the regulations and/or those given herein;
• use on boards which do not guarantee adequate protection against electric shock, water or dust when assembled;
• use on boards which allow dangerous parts to be accessed without the use of tools;
• tampering with and/or alteration of the product;
• installation/use on boards that do not comply with the standards and regulations in force.

DISCLAIMER

This document is the exclusive property of Eliwell Controls S.r.L. and cannot be reproduced and circulated unless expressly authorized by Eliwell Controls S.r.L..
Although Eliwell Controls S.r.L. has taken all possible measures to guarantee the accuracy of this document, it declines any responsibility for any damage arising out of its use.
The same applies to any person or company involved in preparing and writing this manual. Eliwell Controls S.r.L. reserves the right to make any changes or improvements without prior notice and at any time..

CONDITIONS OF USE

PERMITTED USE

For safety reasons the instrument must be installed and used in accordance with the instructions supplied. Users must not be able to access parts with dangerous voltage levels under normal operating conditions.
The device must be suitably protected from water and dust according to the specific application and only be accessible using special tools (except for the front keypad)
The device can be fitted to equipment for household use and/or similar use in the refrigeration sector and has been tested with regard to safety in accordance with the European harmonized reference standards.
It is classified as follows:
• as an automatic electronic control device to be independently mounted as regards its construction;
• as a 1 B type operated control device as regards its automatic operating features;
• as a Class A device as regards the category and structure of the software.

UNPERMITTED USE

The use of the unit for applications other than those described is forbidden.
It should be noted that the relay contacts supplied with the device are functional and therefore exposed to potential faults. Any protection devices required to comply with product requirements or dictated by common sense due to obvious safety reasons should be installed externally.

ELIWELL CONTROLS s.r.l.
Via dell'Industria, 15 Zona Industriale Paludi
32010 Pieve d'Alpago (BL) ITALY
Telephone +39 0437 986111
Facsimile +39 0437 989066
Internet http://www.eliwell.it

Technical Customer Support:
Telephone +39 0437 986300
Email: techsuppeliwell@invensyscontrols.com

Invensys Controls Europe
An Invensys Company

4/2006 GB
cod. 9IS44048