Local regulations may restrict the use of this product to below the conditions quoted.
In the interests of development and improvement of the product, we reserve the right to change the specification without notice. © Copyright 2015

PA20
Preamplifier

Description

The PA20 preamplifier is used with a Spirax Sarco capacitance probe to amplify the capacitance measured and convert it to a voltage output proportional to the liquid level. It is compatible with all Spirax Sarco voltage input controllers / transmitters.
The preamplifier consists of a tubular austenitic stainless steel body which screws onto the top of the probe, and has a DIN 43650 connector with Pg 11 cable gland. The PA20 has three sensitivity settings, selected to suit different probe lengths by wiring variations. These are fully described in the Installation and Maintenance Instructions supplied with the unit.

Principal features:
- Compact, rigidly mounted.
- Can be removed / replaced without disturbing the probe.
- No maintenance needed.
- Suitable for all probe lengths.

Approvals:
The PA20 is also available with a ½" NPT screwed connection, approved to UL61010. **Please note that this version will not be CE marked and is not suitable for Europe.**

Caution: The probe is not suitable for outside installation without additional environmental protection.

Limiting conditions

Maximum ambient temperature	70°C
Maximum cable length	100 m

Technical data

Supply voltage	15 - 36 Vdc
Maximum power requirement	10 mA
Output volts range	1 - 6 Vdc
Output impedance	100 Ω

Voltage check graph

Voltage output characteristics / probe immersed lengths.

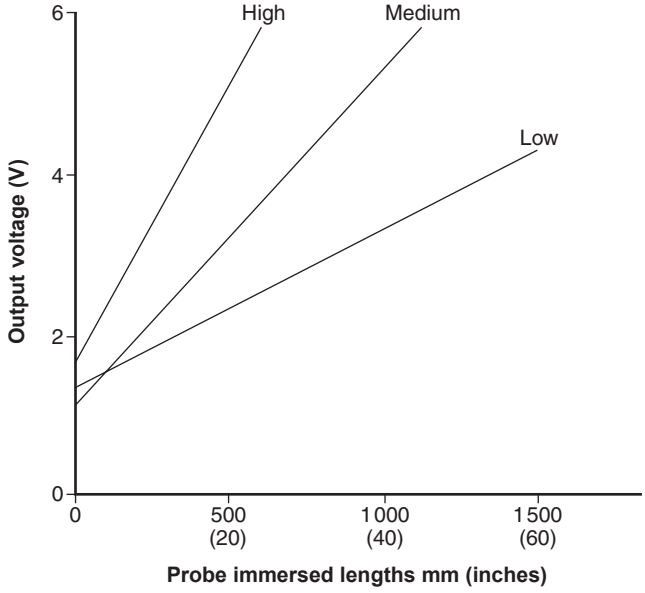

Dimensions (approximate) in mm

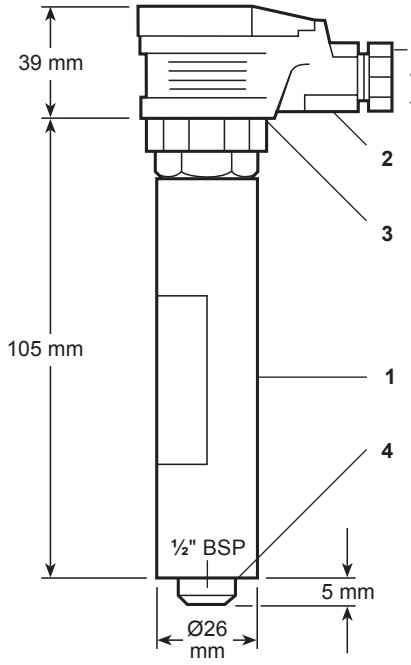

Weight

approximately 0.25 kg including packaging.

Materials

No	Part	Material
1	Body	Austenitic stainless steel ASTM A582 303
2	Cable connector	Polyamide (Glass filled)
3	Connector gasket	Silicone rubber
4	'O' ring	Nitrile rubber

Safety information, installation and maintenance

This document does not contain sufficient information to install the product safely. See the Installation and Maintenance Instructions provided with each unit.

Installation note:
The PA20 is screwed into the top of the capacitance probe and hand tightened. An 'O' ring is supplied to provide a seal. An 'O' ring is also supplied with the probe. Use only one 'O' ring. **Note:** Do not install the probe outdoors without additional weather protection.

Maintenance note:
No special maintenance is required.
Boiler water level controls do, however, require periodic testing and inspection, which is described in separate literature.

Spare parts
There are no available spare parts for this unit.

How to specify

Preamplifiers shall be Spirax Sarco type PA20 for use with Spirax Sarco capacitance probes. Preamplifiers shall have austenitic stainless steel bodies and a screwed connection, with a DIN 43650 connector and Pg 11 cable gland.

How to order

Example: 1 off Spirax Sarco PA20 preamplifier.