Pascal Pump

Air Operated Hydraulic Pump

model **X63**

Pascal
corporation

www.pascaleng.co.jp

Contents

Page

1. Structure and Parts name 1
2. The Principle of Operation 2,3
3. Installation 4
   - 3.1 Suction Piping and Suction Filter 4
   - 3.2 Mounting of Pump 4
   - 3.3 Discharge Piping 5
   - 3.4 Return Piping 5
   - 3.5 Air Supply Tubing 6
4. Adjustment 7
   - 4.1 Start-up and Air Bleeding of Pump 7
   - 4.2 Air Pressure and Discharge Pressure 7
5. Maintenance 8
6. Troubleshooting 8,9

1. Structure and Parts name

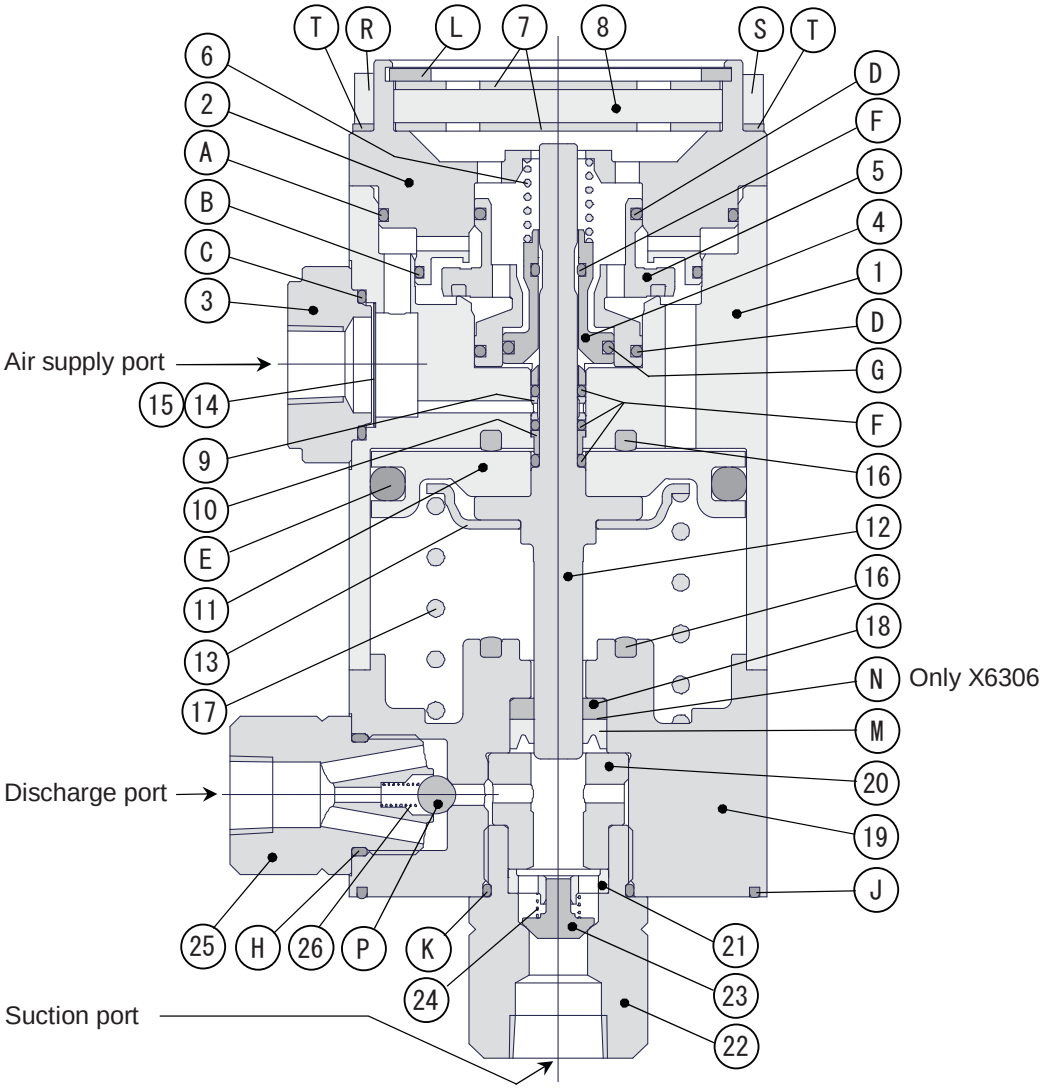

Figure 1.1

Table 1.1

NO.	Parts Name	NO.	Parts Name	NO.	Parts Name	NO.	Parts Name
1	Cylinder	12	Hydraulic Piston	23	Suction valve	G	O-ring
2	Cap	13	Spring seat	24	Suction spring	H	O-ring
3	Air supply fittings	14	Metal net	25	Discharge fittings	J	O-ring
4	Master valve 1	15	Filter	26	Discharge spring	K	O-ring
5	Master valve 2	16	Cushion rubber	-	–	L	Snap ring
6	Return Spring 1	17	Return Spring 2	A	O-ring	M	U packing
7	Muffler Plate	18	Bushing 2	B	O-ring	N	Back-up ring
8	Muffler	19	Body	C	O-ring	P	Discharge valve
9	Spacer	20	Sleeve	D	O-ring	R	Bolt (M8*105)
10	Bushing 1	21	Suction bushing	E	O-ring	S	Mounting bolt (M8*140)
11	Air Piston	22	Suction fittings	F	O-ring	T	Spring washer (M8)

2. The Principle of Operation

2-1. Discharge process

Regulated compressed air comes inside though a filter to push Master valve 2 down, also pushes the piston (air, hydraulic) down in the cylinder in order to have the check valve opened for discharging oil.

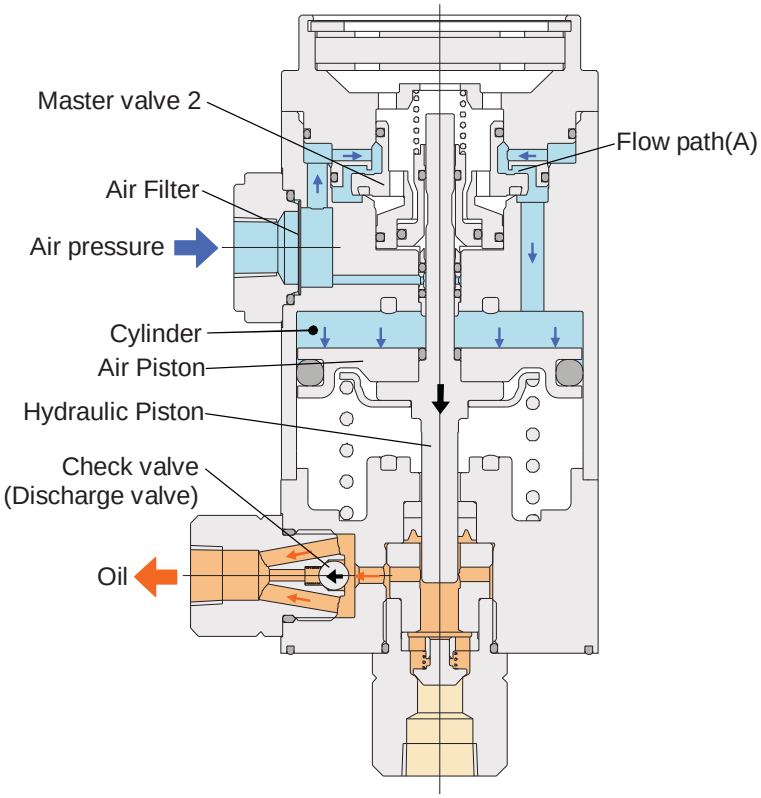

2-2. Lower end of Stroke

When the pistons reach to the end of stroke, flow path (B) opens to deliver the compressed air to the bottom of Master valve 1 and 2 to lift. The lifted valve shuts flow path (A) at the same time flow path (C) opens. In this case, air flow to the air and hydraulic piston is cut off by the master valve.

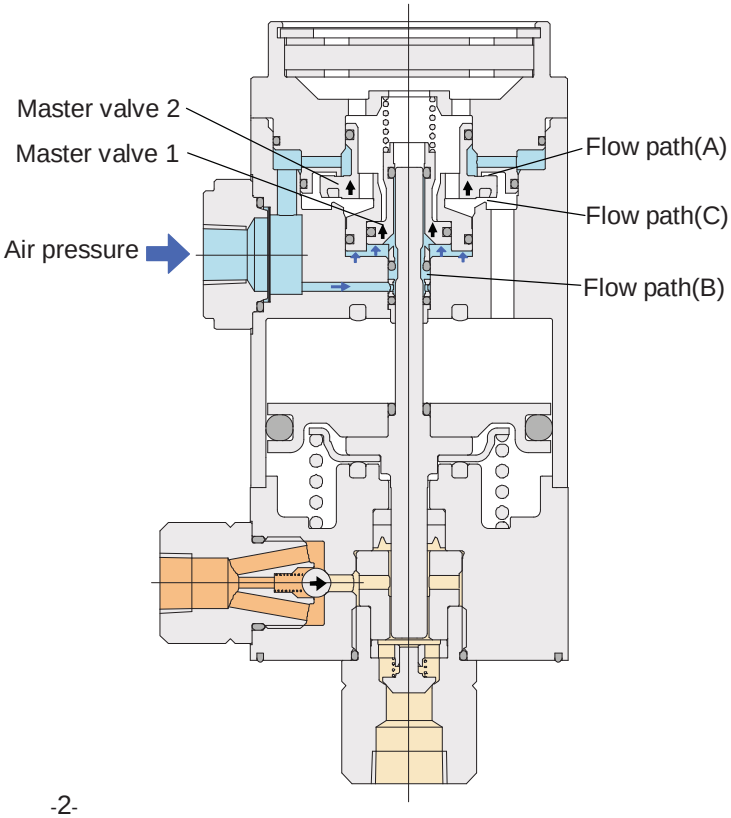

2-3. Suction process

The air and hydraulic piston have been pushed up by the spring and the check valve (suction valve) opens to
suction oil. The air remained in the cylinder is exhausted to atmosphere through flow path (C) and muffler.
Flow path (B) is closed during this process.

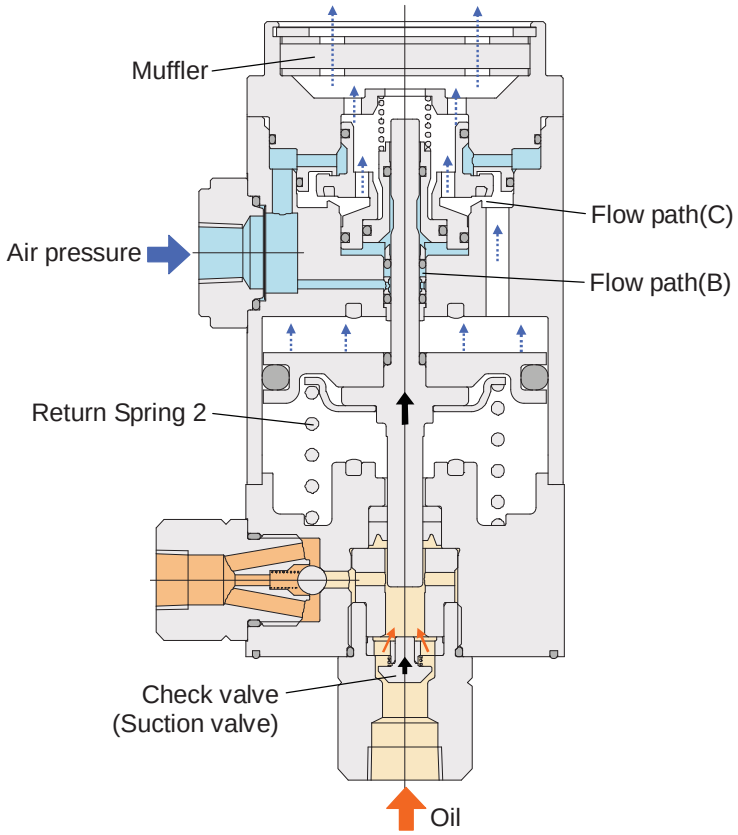

2-4. Upper end of Stroke

The exhaust valve opens when the air and hydraulic piston goes up to the end of stroke. The air lifting the master valve 1.2 is exhausted to atmosphere and the valve 1 and 2 are pushed back to open flow path (A) so that air piston and hydraulic piston can start oil discharge process again.

Pascal pump repeats the action being explained chapter 2.1 to 2.4 pumping about 2000spm under no load, and stops when the air pressure and discharge
oil pressure is balanced. It can keep the discharge pressure as long as air pressure is maintained.

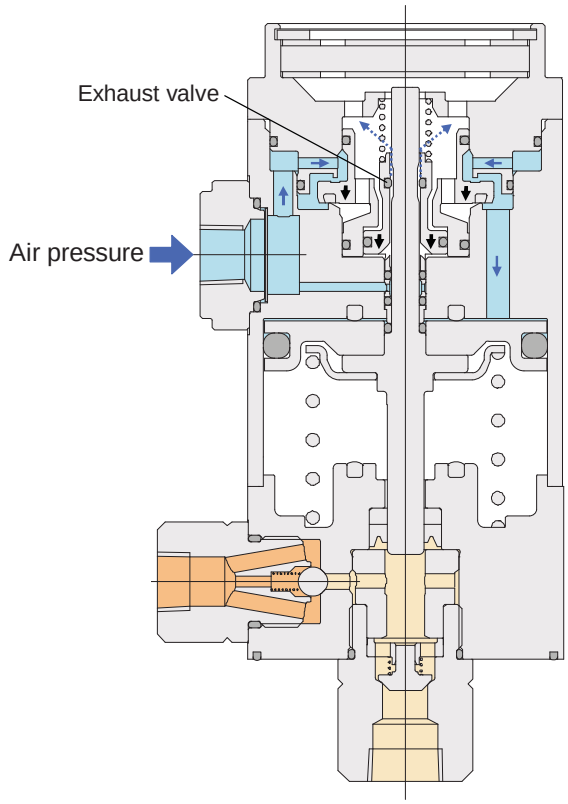

3. Installation

3.1 Suction Piping and Suction Filter

(1) In case to use Pascal Suction Filter (Refer to "model WSB03" on Fig. 3.1) sold separately, fix it with Suction port as Fig. 3.2. In case to supply it by customer, use 100-mesh filtration and outer max.φ57. Provide a joint between the pump and suction filter by customer and use a seal for air suction proof. Make sure the seal enough to protect air suction. Otherwise, the pump idles to vacuum air and cannot discharge oil.

(2) Keep high oil level in tank as much as possible. Otherwise, the pump vacuums air through the suction filter and idles, then the pump cannot discharge oil.

⚠ CAUTION

1. Make sure to fix a suction filter to protect foreign matters into the pump.
2. The pump vacuums air through the suction filter and idles, then the pump cannot discharge oil. As a result, the sealing portion in the pump will be rapid worn out to cause malfunction.

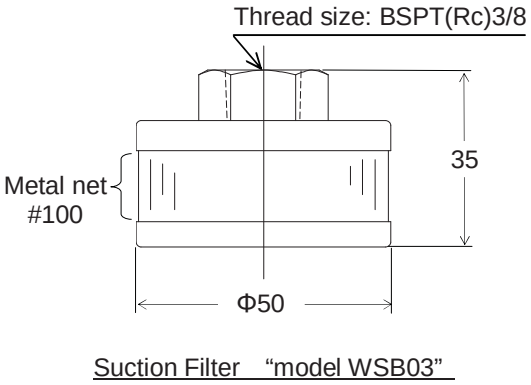

Suction Filter "model WSB03"

Figure 3.1

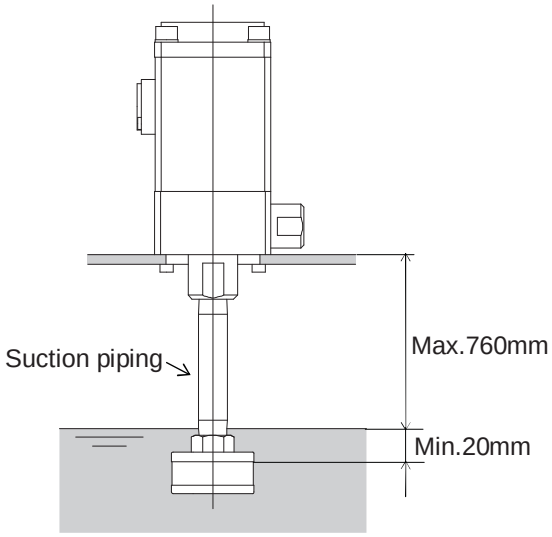

Figure 3.2

3.2 Mounting of Pump

（1）Mount the pump with M8 bolts (2 pieces) .
(Recommended tightening torque: 14.2 N-m)

（2）Pump is able to mount in any direction.

3.3 Discharge Piping

(1) The valve makes smooth air bleeding on the discharge piping when starting. (Refer to Fig. 3.3)

(2) When discharging oil, it comes pulses. In case of pulsing, use an accumulator (min. 10cm^3).
Select vibration proof for an oil pressure indicator.

3.4 Return Piping

Oil returns to the tank through piping is mixed air, it makes bubbles in the tank. The bubbles through the suction filter to the pump make to idle and cannot discharge the oil. In order to protect idling, treat the following as Fig. 3.3.

(1) Set up a buffer plate in the oil tank.

(2) Fix an elbow or tee fittings with the return piping edge and make the oil flow far from the suction filter.

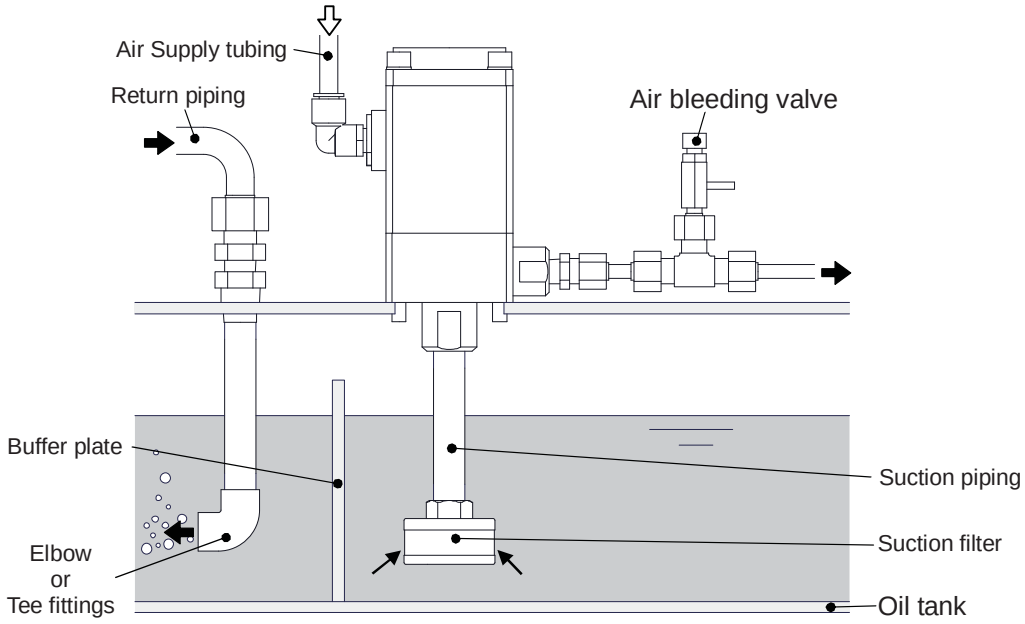

Figure 3.3

3.5 Air Supply Tubing

Refer to Fig. 3.4.

(1) Make an air tube with inner min. 6mm.

(2) Regarding the air pressure related equipment (valve, air regulator, or air filter), use the capacity with min. 0.8Nm3/min. per single pump. We recommend the below Tab. 3.1 for air regulator and air filter. If the air regulator lacks the capacity, the air pressure will be fluctuated large and the pump may not work properly.

(3) Select a pressure gauge with vibration proof.

(4) Air bleeding for the pump makes one by one. In case of two pumps used in the unit, make sure to provide a stop valve in the port of air for each pump. (Refer to Fig. 4.1.)

⚠ CAUTION

1. Make sure to mount an air filter. The pump when shipping is greased around the seal. We recommend to start the pump with non-drain and oilless air. If drain or compressure oil is mixed into the pump, the grease around the seal is swept away. The seal is dried out and is worn.
2. In case of lubricant oil using, lubricator should be mounted between the regulator and the pump, but close to the pump as much as possible. Supply enough lubricant oil constantly. If the volume of oil is not enough nor sequence, the seal will be dried out and worn. The pump doesn't work properly.

Table 3.1

Number of pumps	Air regulator (made by SMC)	Air filter (made by SMC)	Regulator with Air filter (made by SMC)
1set	AR30	AF30	AW30
2 sets	AR40	AF40	AW40

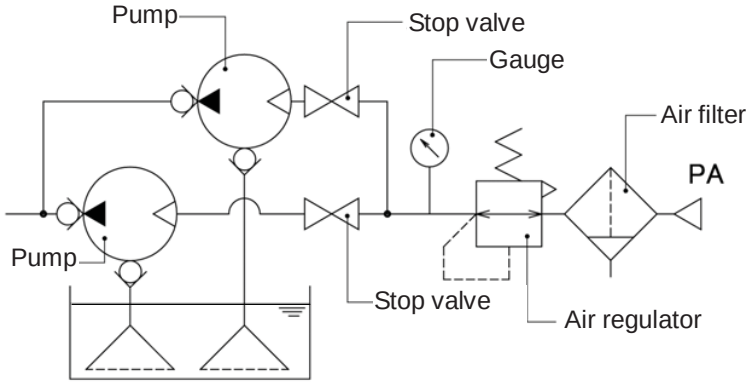

Figure 3.4

4. Adjustment

4.1 Start-up and Air Bleeding of Pump

Make sure to use of the working fluid mentioned in "ANNEX. RECOMMENDED WORKING FLUID LIST". Air bleeding must be performed at the following cases. If bubbles are mixed into the working fluid, the pump runs without oil discharge. (That is idling.)

(1) Initial operation of the pump
(2) Lack of air bleeing in the hydraulic circuit such as piping, valave and other equipment, and then air remained in the circuit.
(3) Air coming from the suction filter due to low level in the oil tank.
(4) Pump operationg after a long interval (over 1 month)

⚠ CAUTION
Working fluid cannot be properly discharged without air bleeding. As a result, the sealing portion in the pomp will be rapid worn out to cause malfunction.

4.1.1 Air bleeding of single Pump.

(1) Set-up an air regulator at 0MPa.
(2) Increase the pressure gradually. When the pump normally starts working at 0.1～0.15MPa, loosen the air bleeding valve 1 or 2 times. If the valve is not equipped, loosen the fittings located at the discharged side of the piping.
Note : If the pump doesn't work at 0.1~0.15MPa, increase the pressure till it starts, and then make down to 0.1~0.15 MPa. Make sure that the air cannot be bleed over 0.15Mpa.
(3) After loosening the valve or fittings in 5~30 seconds, the fluid included bubbles will come out. Keep runnning the pump for 1 minute. When no bubbles coming and checking by your eyes, tighten the valve or fittings.
(4) Set the air pressure at the desired level, and then start the operation.

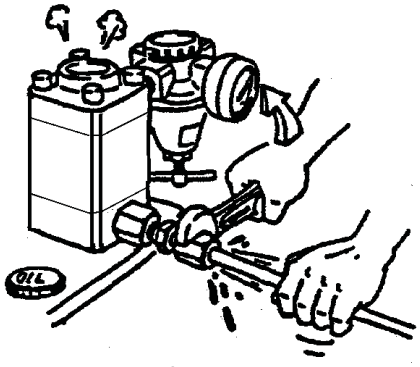

Figure 4.1

4.1.2 Air bleeding of multiple Pumps.

(Refer to “Figure 3.4” on page 6.)

(1) Air bleeding of plural pumps should be done one by one. Open only an air stop valve of the first pump, but close the others.
(2) Carry out the procedures “4.1.1 (1)~(3)”. After air bleeding, close the valve of the first pump. Then open an air stop valve of the second pump and repeat the same procedures.
(3) After air bleeding for all pumps, set the air pressure at the desired level and then start the operation.

4.2 Air Pressure and Discharge Pressure

In case that hydraulic equipment made by Pascal is used, refer to the below Table 4.1.

Table 4.1

Working pressure of hydraulic equipment made by Pascal	Model of pump	Setting of air pressure
24.5 MPa	X6308	0.47 MPa
13.7 MPa	X6310	0.42 MPa

5. Maintenance

The following services must be performed before daily works.

(1) Check of level in oil tank.
Make sure that oil level is higher than 20 mm (0.8 in.) above the metal net of the suction filter.

(2) Check of the air pressure and hydraulic pressure. .
Start the pump, and then make sure that air pressure and hydraulic pressure keep each rated pressure.

(3) Check of oil leakage.
Make sure that pump does not work after hydraulic pressure rises to the rated pressure. If the pump still works within one minute interval, oil leaks somewhere in hydraulic circuit.

6. Troubleshooting

In case that the below procedures don't work, contact us.Refer to "5. Structure and Parts name" on page 1.

⚠ CAUTION
DO NOT take apart a pump. There is NO guarantee under warranty when disassembling. If taking apart it, it is dangar to jump up some parts by the built-in spring from the pump.

Trouble 1 : Pump makes noises rapidly, but no discharge the fluid.

Cause	Remedy
Incomplete air bleeding of the pump.	Bleed air in the pump. (See 4.1)
Low level of oil tank.	Refill oil and bleed air in the pump. (See 4.1)
Bubbles containing into working fluid in the oil tank.	Restart the pump after bubbles disappear or change the working fluid. Check the return piping of 3.4. and bleed air in the pump. (See 4.1)
Looseness of fittings at the suction line.	Tighten the fittings of suction line.

Trouble 2 : After rising the pressure, pump makes noises in a long inverval randomly and keeps making noises.

Cause	Remedy
Oil leakage from the valve which is NOT Pascal own product.	Use the valve made by Pascal.
In case of using Pascal non-leak valve or Pascal releaf valve: **a.** Damage of non-leak valve **b.** Mis-setting the pressure or damage of the releaf valve.	**a.** Refer to Instruction Manual of non-leak valve. **b.** Refer to Instruction Manual of releaf valve.
Oil leakage from the piping of discharge side.	Tighten the valve or fittings of discharge side.
Oil leakage from the actuator. (clamps)	Check the actuator.

Trouble 3 : Motion of pump is slow or sometimes stops it in irregular condition.

Cause	Remedy
Low air pressure	Check air source or air regulator.
Air leakage from tubing of air supply line.	Check tubing of air supply line.
Clog of air filter.	Clean air filter (14) and (15).
Lack of air volume.	Keep air volume with 0.4Nm^3/min. Use air pressure equipment with over 0.8m^3/min for the single pump. Check air consumption in the building whether air uses for other equipment.

Trouble 4 : Pump doesn't work to leak air from the muffler(※1).

Cause	Remedy
Lack of air volume.	Keep air volume with 0.4Nm^3/min. Use air pressure equipment with over 0.8m^3/min for the single pump. Check air consumption in the building whether air uses for other equipment.

(※1) Restoration: Set back to 0Mpa, then raise again the air to the rated pressure. Or fill in the air directly to the rated pressure level.

Trouble 5 : Blowing the oil out from the muffler of the pump.

Cause	Remedy
Oil splashing over the pump and muffler.	Treat not to splash the oil.
Too much oil lubricating by air supply.	Adjust the lubricator.
Blowing the drain water, not the oil.	Provide an air dryer or a drain cap in the air circuit.

Trouble 6 : Air bleeding doesn't work.

Cause	Remedy
Air bleeding pressure is set at min. 0.15MPa.	Reset the air bleeding at 0.1～0.15MPa. (See 4.1.)
Metal seal of the suction valve (23) is dried out and the seal doesn't work properly due no using longer or dry operating longer.	After dropping the fluid on the suction valve (23), make air bleeding. (See 4.1.)