Schematic Diagram

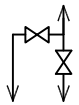

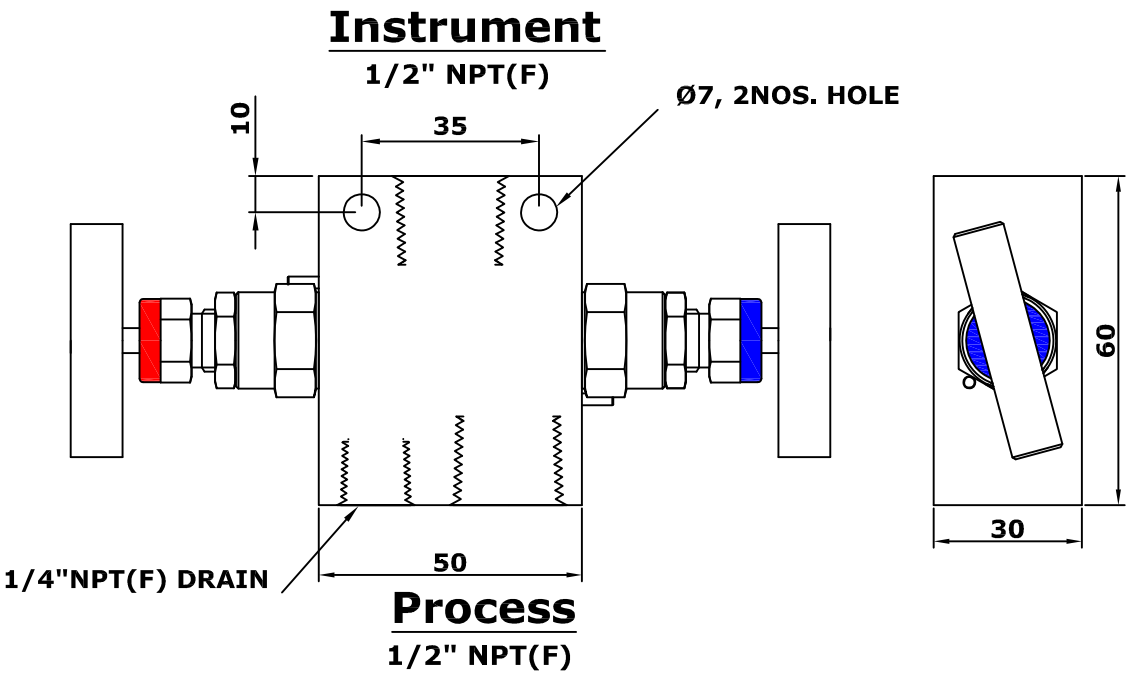

VALVE REPAIR KIT OR COMPLETE VALVE WILL BE ORDERED

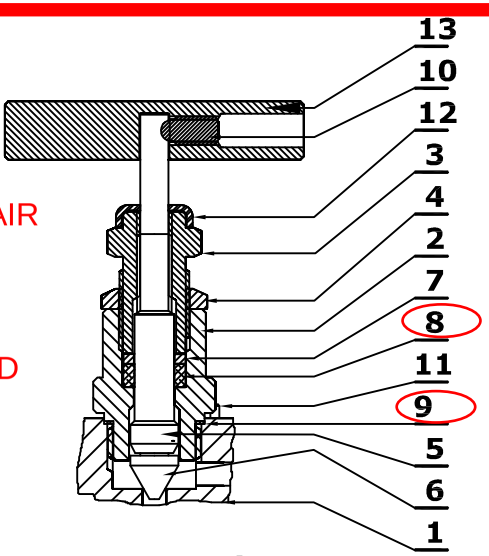

Bonnet Assembly

NO.	DESCRIPTION	QTY.	MATERIAL
1	BODY	1	SS 316
2	BONNET	1	SS 316
3	BONNET PUSHER	1	SS 316
4	CHECK NUT	1	SS 316
5	STEM	1	SS 316
6	STEM TIP (non rotatlng)	1	SS 316
7	WASHER	1	SS 316
8	PACKING	1	PTFE
9	BONNET SEAL	1	SS 316
10	GRUB SCREW	1	SS
11	LOCKING PIN	1	SS 316
12	DUST CAP	1	PLASTIC
13	HANDLE	1	SS 304

TWO VALVE MANIFOLD

1/2"NPT(F) - PROCESS CONNECTION
1/2" NPT(F) - INSTRUMENT CONNECTION
1/4" NPT(F) - VENT PORT
Accessories - 1NOS. 1/4" NPT plug
MATERIAL - SS 316

NOTE : Dimensions for reference only and are subject to change.

	MATERIAL --- ---	TITLE 2 VALVE MANIFOLD
	DIMENSIONS M.M. / SCALE N.T.S.	DRAWING NO C2VM - 344 / REV 00