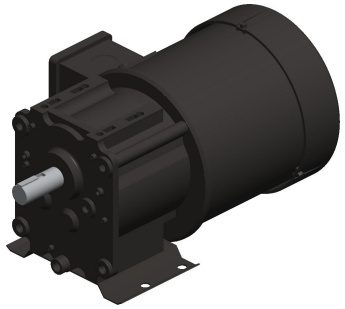

Input HP	1/12	Overhung Load	175 Lb.
Gear Ratio	127:1	Gearmotor Voltage	115 VAC
No Load RPM	NA	Max. Ambient Temp	40 °C
Nameplate RPM	14	Gearmotor Phase	1
Full Load Amps	1.75	Gearmotor Rotation	CW / CCW
Insulation Class	NA	Motor Type	Split-Phase

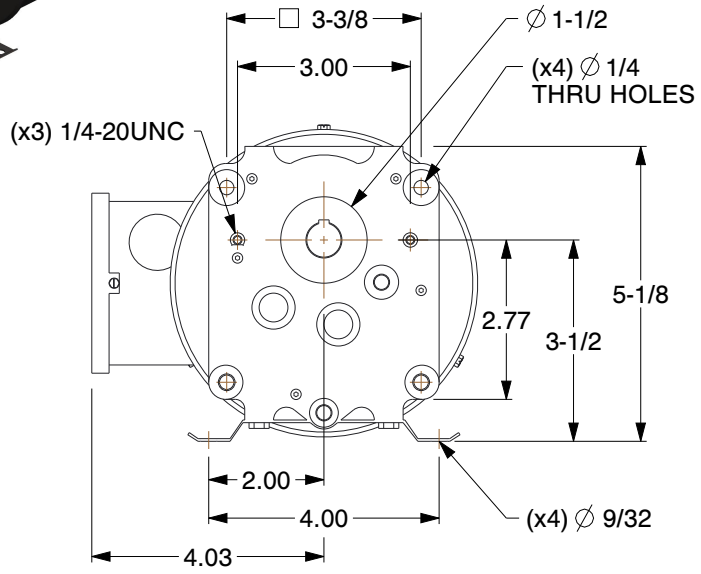

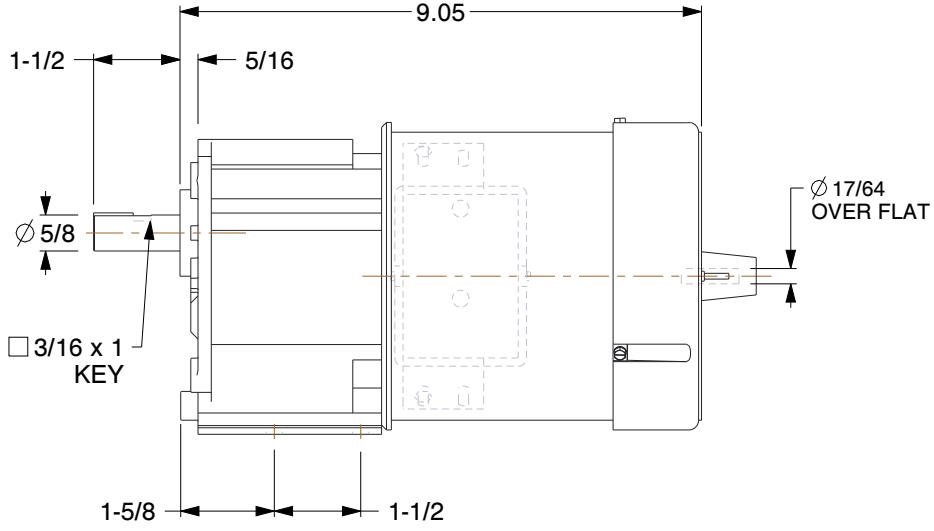

NOTES:

1. Hz: 60 / 50
2. MAX. TORQUE: 350.0 in.-lb.
3. SEALS: Lip Type on Input and Output Shaft
4. SHAFT TYPE / ORIENTATION: Single / Parallel
5. GEARMOTOR MOUNTING POSITION: All Angle
6. LUBRICATION: Permanent Heavy Duty Gear Oil
7. GEARMOTOR ENCLOSURE: Totally Enclosed Fan-Cooled
8. MATERIAL / HOUSING: Die Cast Aluminum / Die Cast Aluminum
9. GEAR TYPE: Helical First Stage / Subsequent Stages Spur / AGMA Class 9
10. BEARINGS: Heavy Duty Needle Roller and Thrust Balls on Case, Ball on Motor
11. GEARS: Hardened Steel, 1st Stage Helical, Subsequent Stages Spur, AGMA Class 9
12. GEAR MATERIAL / TYPE: Hardened Steel / Helical First Stage/Subsequent Stages Spur/AGMA Class 9

COMPONENT	AC Gearmotor

This file and any associated information and specifications are provided for reference and evaluation purposes only, and is subject to change without notice. Grainger makes no representations, warranties or guarantees as to the appropriateness, accuracy, completeness, or suitability for any purpose, of the file, information or specifications. You are solely responsible for the use of the file, information or specifications.

SCALE	0.46

6Z816

AC Gearmotor, 7. 8 RPM, TEFC, 115/230 V

UNIT	INCH
SHEET	1 of 1