ZÖLLNER
signal system technologies

MAKROFON M75F/260-370 ZVE(E)(H)

The ZÖLLNER MAKROFON M75F is a diaphragm sound transmitter operating on compressed air. The signal is released by an electromagnet or manually using a hand pull-rope. To avoid the costly laying of a pull-rope, a second electromagnet for emergency voltage can be provided. A thermostat controlled anticondensation heating keeps the sound horn and the operating valve free from condensed water and thus from ice.
Typically the MAKROFON M75F will operate on air pressures between 6 and 40 bar. For electric release and operation of the heating a connection to 230 or 115 V AC 1phase or 24 V DC power supply is required.

Essentials

» full compliance with the COLREG 1972 Annex III
» type approved by all wellknown international authorities and classification societies

Application:
» vessels of class II (M75F/260), (75 m but less than 200 m in length)
» vessels of class III (M75F/370 and M75F/260), 20 m but less than 75 m in lengt
» land alarm, i.e. bunker stations, oil refineries, airports, power plants, factories

Advantages

» decades of experience
» best material and workmanship - made in Germany
» entirely made of best non-corrosion, seawater resistant materials
» sound horn made of sheet-copper (not plastic!)
» simple but matured design, almost maintenance-free
» easy exchange of all parts with onboard tools
» easy installation – relatively low weight

Sound Characteristics

» broad frequency spectrum with many higher harmonics
» signals with strong over tones for best penetration of background noise level. Even when a background noise covers the actual basic frequency the residual tone forms a parent frequency in the human hearing. Two or three harmonics are sufficient for the hearing to perceive the basic frequency.
» sound frequency of 260 / 370 Hz very advantageously ranks in the lower admissable range (class II 130-350 Hz, class III 250-700 Hz)
» sound pressure level M75F/260: 138 dB in 1/3rd-octave band level at 1 m distance for class II or class III
» sound pressure level M75F/370: 130 dB in 1/3rd-octave band level at 1 m distance for class III

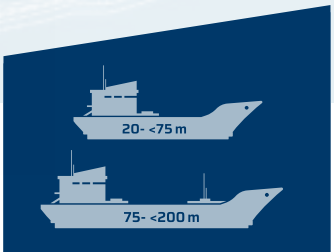

Technical information

Positioning and installation

Position as high as practicable on the vessel to reduce interception of the emitted sound by obstructions and to avoid hearing damage risk to the personnel. The sound pressure level of a vessel's own signal at listening posts must not exceed 110 dB(A). Installation - compressed air supply pipe preferably of copper with a filter (type F3.1) preceding the Makrofon operating valve. Supply pipe must be free from any dirt particles and moisture.

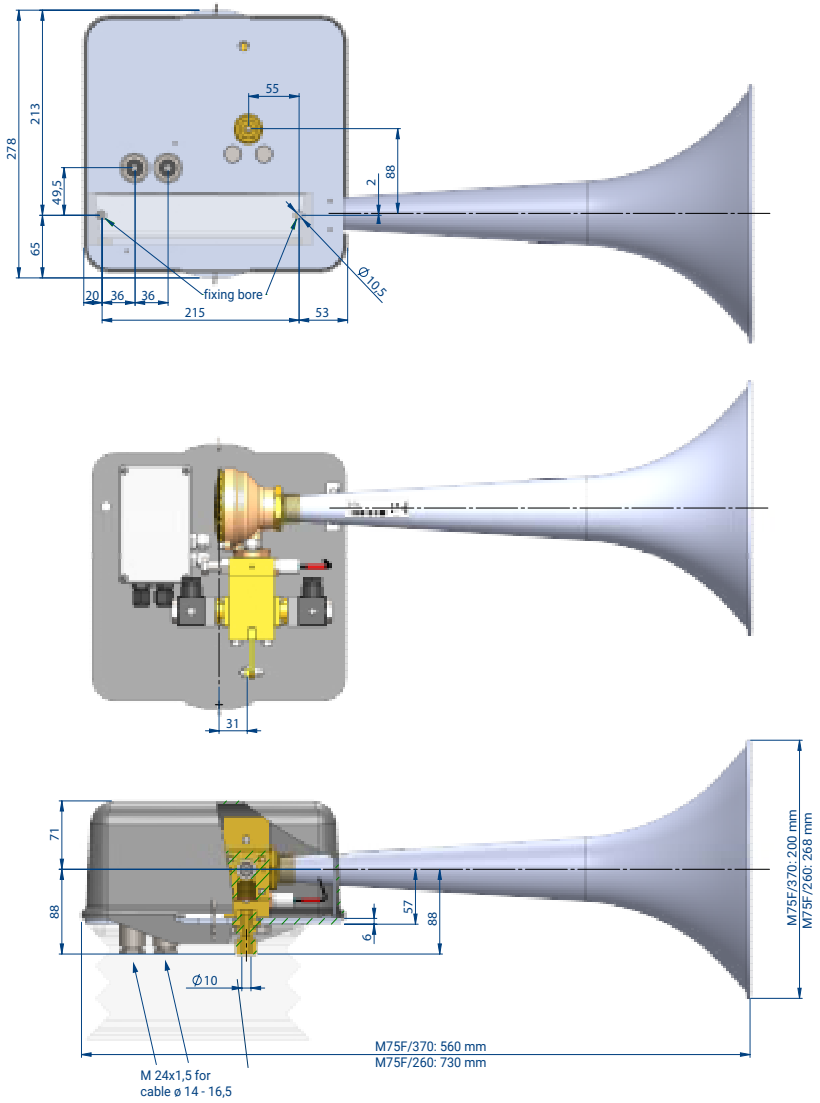

weight approx. 8 kg

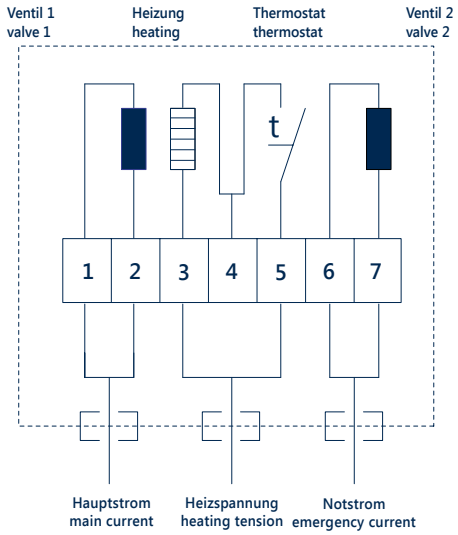

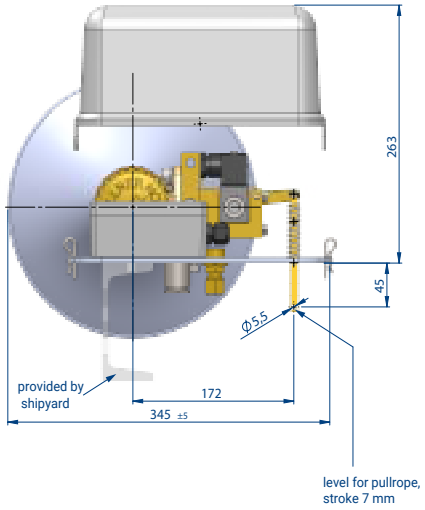

TYPE	SHIP LENGTH	FUNDAMENTAL FREQUENCY	SOUND INTENSITY IN 1/3RD-OCT. BAND LEVEL AT 1 M	TYPE APPROVAL	AIR PRESSURE	AIR CON-SUMPTION FREE, DRY AIR	AIR PIPE CONNECTION	SYSTEM VOLTAGE	HEATING	PROTECTION TYPE
M75F/370	20-<75 m	370 Hz	130 dB	✓	6-40 bar	8- 12 l/sec	10x1 mm	115 V AC 230 V AC 24 V DC	30 W	IP 56
M75F/260	20-<200 m	260 Hz	138 dB	✓	6-40 bar	8-12 l/sec	10x1 mm	115 V AC 230 V AC 24 V DC	30 W	IP 56

06100087EN6 • 06/22 • Subject to alteration!