# SREK TYPE
## – Square Flange type –



### part number structure

example SREK 25

SREK type

inner contact diameter (dr)

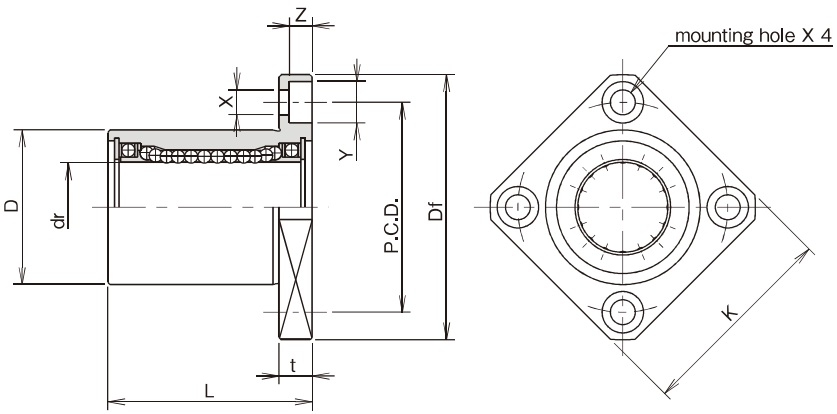


| part number | major dimensions | | | | | | | |
|---|---|---|---|---|---|---|---|---|
| | dr | | D | | L | | | flange |
| | mm | tolerance μm | mm | tolerance μm | ±0.3 mm | Df mm | K mm | t mm |
| SREK 6 | 6 | +4 −5 | 12 | 0 −13 | 19 | 28 | 22 | 5 |
| SREK 8 | 8 | | 15 | | 24 | 32 | 25 | 5 |
| SREK10 | 10 | | 19 | 0 −16 | 29 | 40 | 30 | 6 |
| SREK12 | 12 | +3 −6 | 21 | | 30 | 42 | 32 | 6 |
| SREK13 | 13 | | 23 | | 32 | 43 | 34 | 6 |
| SREK16 | 16 | | 28 | | 37 | 48 | 37 | 6 |
| SREK20 | 20 | +3 −7 | 32 | 0 −19 | 42 | 54 | 42 | 8 |
| SREK25 | 25 | | 40 | | 59 | 62 | 50 | 8 |
| SREK30 | 30 | | 45 | | 64 | 74 | 58 | 10 |

| P.C.D. mm | X×Y×Z mm | perpendicularity μm | basic load rating dynamic C N | basic load rating static Co N | allowable revolutions per minute rpm | mass g | part number |
|---|---|---|---|---|---|---|---|
| 20 | 3.5×6×3.1 | 12 | 78 | 176 | 300 | 21 | SREK 6 |
| 24 | 3.5×6×3.1 | | 137 | 314 | 300 | 33 | SREK 8 |
| 29 | 4.5×7.5×4.1 | | 157 | 372 | 300 | 61 | SREK10 |
| 32 | 4.5×7.5×4.1 | | 274 | 588 | 300 | 67 | SREK12 |
| 33 | 4.5×7.5×4.1 | | 323 | 686 | 300 | 83 | SREK13 |
| 38 | 4.5×7.5×4.1 | | 451 | 882 | 250 | 126 | SREK16 |
| 43 | 5.5×9×5.1 | 15 | 647 | 1,180 | 250 | 178 | SREK20 |
| 51 | 5.5×9×5.1 | | 882 | 1,860 | 250 | 355 | SREK25 |
| 60 | 6.6×11×6.1 | | 1,180 | 2,650 | 200 | 483 | SREK30 |

1N≒0.102kgf