HIGH-TRO-REEL (Non-Tension Type)

Multi-Lead Indoor Use Insulated Trolleys · UL Listed

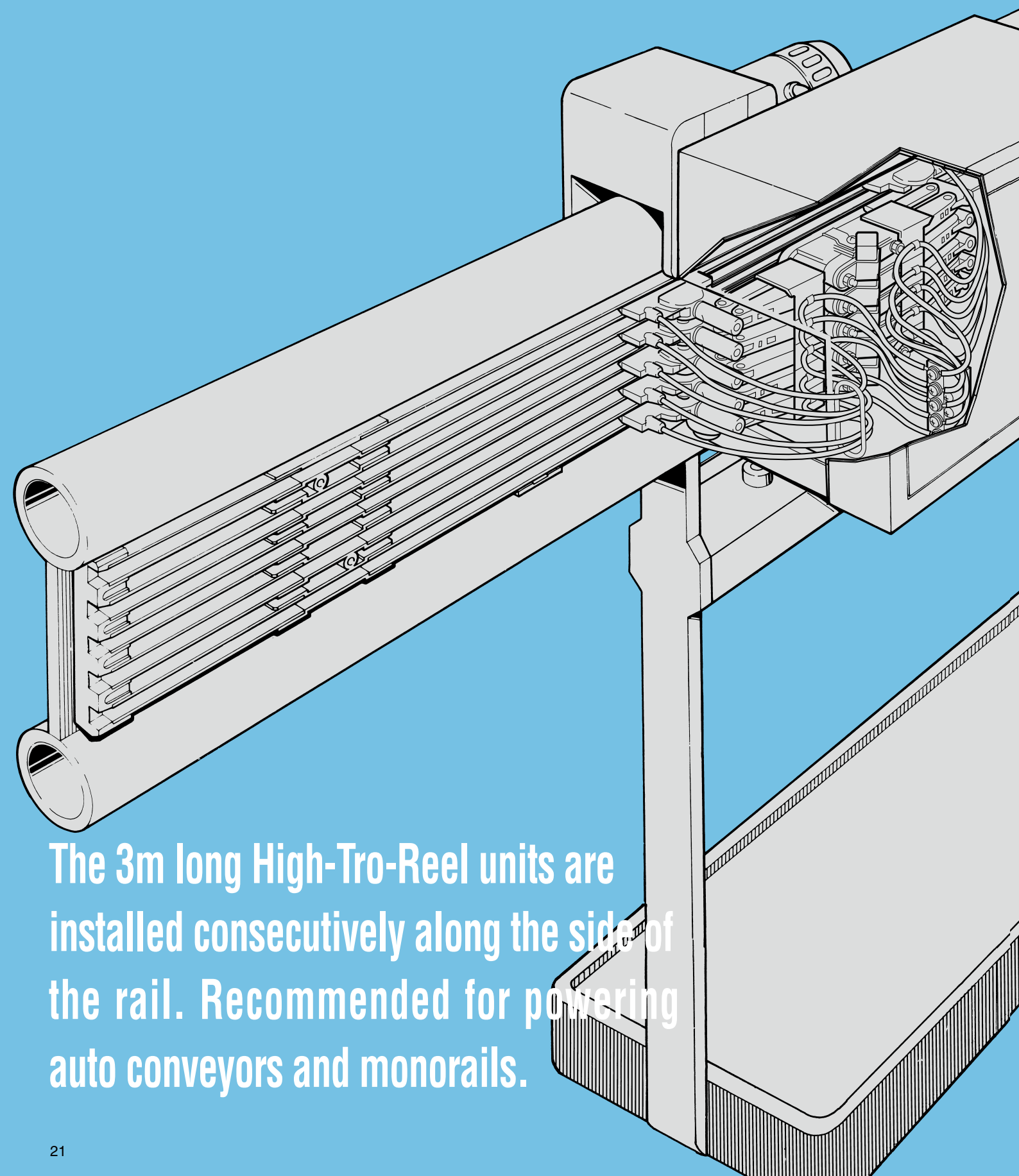

The 3m long High-Tro-Reel units are installed consecutively along the side of the rail. Recommended for powering auto conveyors and monorails.

Compact and easy to install.

Multi-lead system allows setup even in confined spaces. Simply snap the unit onto the hanger. Using joiners when connecting the units vastly reduces setup time.

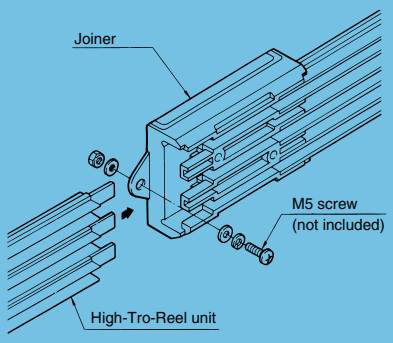

Installation on curved lines.

Use on vertical curves with a radius of as tight as 800mm is possible, so it's perfect for even multi-curve installations.
(Horizontal curves are not possible.)

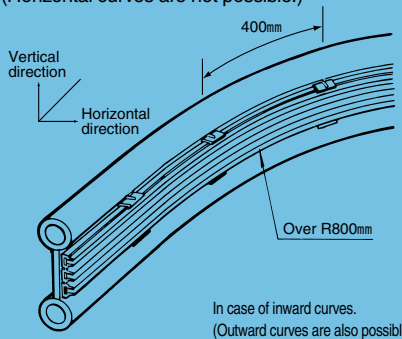

In case of inward curves.
(Outward curves are also possible.)

Flexible positioning of power supply points and circuit sections.

With its center-feeding method, power can be supplied from anywhere on the line. Sections with different voltages can be installed by simply inserting insulating pieces.

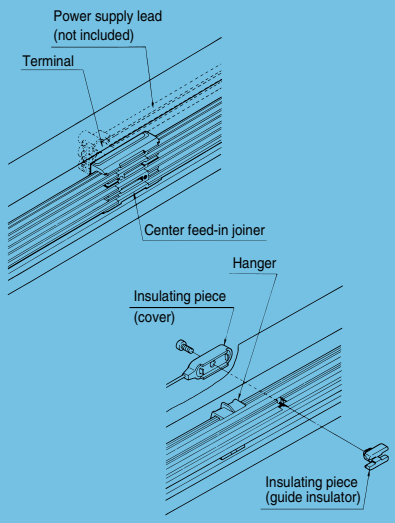

Turntable/traverser applicability.

The guide cap enables smooth transfer of collector arms. Provides problem-free transfer between lines of different voltages in Flexible Manufacturing System (FMS) factories.

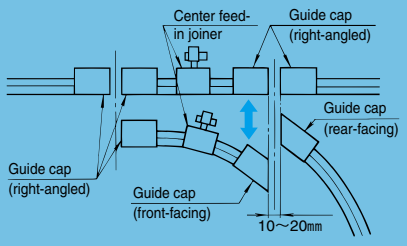

Power supply and commands transmitted simultaneously.

With a single 5P or 6P High-Tro-Reel unit, both three-phase power and control commands can be transmitted simultaneously. Moving/controlling systems for transfer robots and auto conveyors can be installed even in confined spaces. (Please contact to ask us about more information.)

⚠Please follow the safety precautions on page 2.

60A High-Tro-Reel unit (for indoor use only) UL Listed

●Rating 3P, 4P, 5P, 6P at 600V, 60A
●Conductor materials Copper (8㎟) + Copper (20㎟)
●Insulating sheath material Rigid PVC (heat resistance: 75℃)
Orange (hazard color),
Munsell 2.5YR 6/13

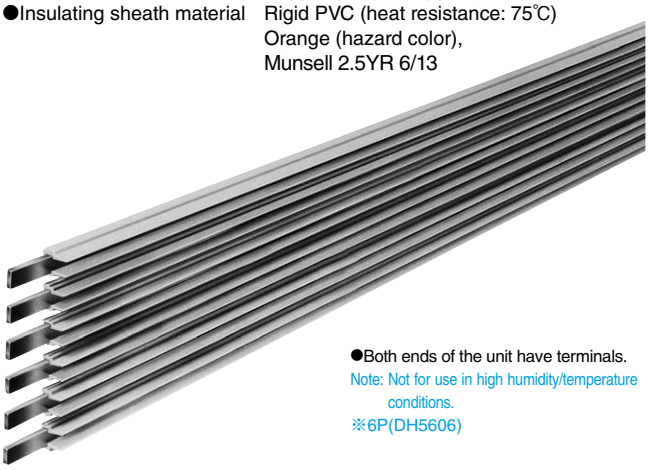

●Both ends of the unit have terminals.
Note: Not for use in high humidity/temperature conditions.
※6P(DH5606)

●Cross-section

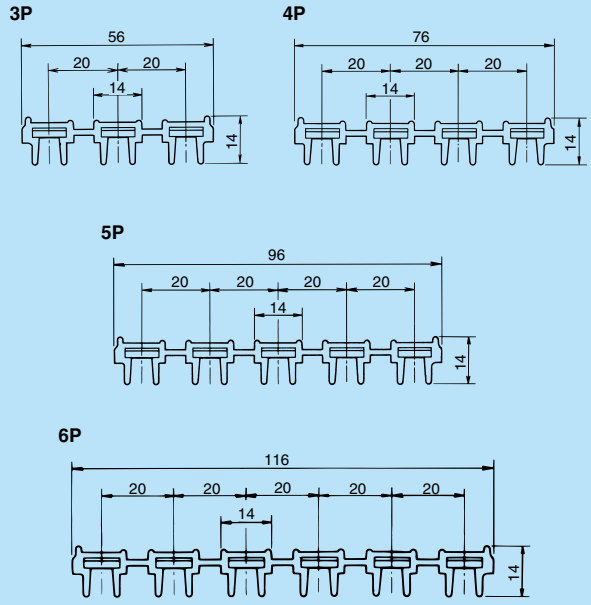

Cat. No.	Rating	Standard length	Weight (kg)	Units per box	Units per carton
DH5603	3P600V60A	3m	3.13	—	5
DH5604	4P600V60A	3m	4.18	—	5
DH5605	5P600V60A	3m	5.22	—	5
DH5606	6P600V60A	3m	6.27	—	5

●60A units longer than 2997mm are available by special order (up to 6m)

Center feed-in joiner UL Listed

Used to supply power. Also used to connect the High-Tro-Reel units.

Note: Cannot be used as an end feed.
※5P(DH5615K)



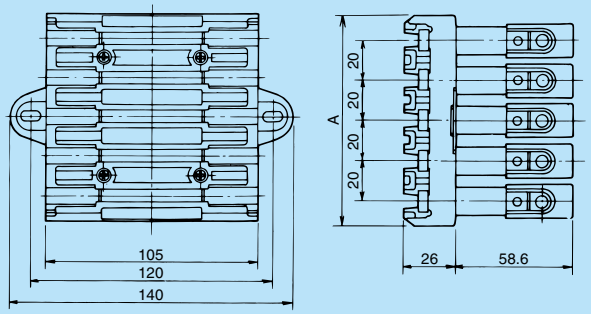

Drawing shows a 5P joiner.

Cat. No.	Rating	A	Weight (kg)	Units per box	Units per carton
DH5613K	3P600V60A	65	0.35	1	10
DH5614K	4P600V60A	85	0.46	1	10
DH5615K	5P600V60A	105	0.56	1	10
DH5616K	6P600V60A	125	0.66	1	10

Center feed-in joiner (side-cable type)

Used to supply power. Also used to connect the High-Tro-Reel units.

Note: UL Approval Pending
Note: Cannot be used as an end feed.
※4P(DH56141K)



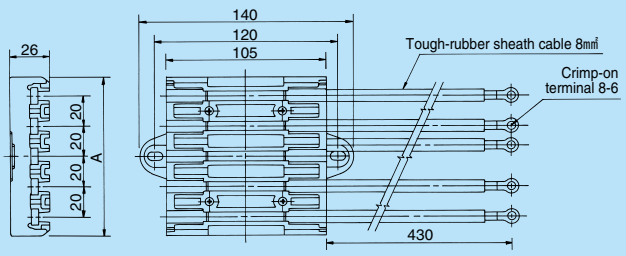

Drawing shows a 5P joiner.

Cat. No.	Rating	A	Weight (kg)	Units per box	Units per carton
DH56131K	3P600V60A	65	0.35	—	1
DH56141K	4P600V60A	85	0.46	—	1
DH56151K	5P600V60A	105	0.56	—	1
DH56161K	6P600V60A	125	0.66	—	1

Joiner — UL Listed

The High-Tro-Reel units are connected at intervals of 3m. Joiners allow for expansion and contraction of the units due to temperature fluctuations.



※5P(DH5625K)

Cat. No.	Rating	A	Weight (kg)	Units per box	Units per carton
DH5623K	3P600V60A	65	0.21	1	20
DH5624K	4P600V60A	85	0.26	1	20
DH5625K	5P600V60A	105	0.32	1	20
DH5626K	6P600V60A	125	0.38	1	20

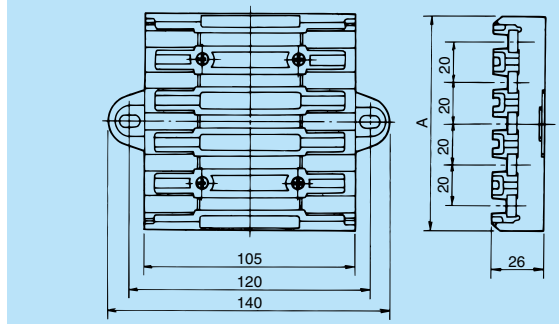

Drawing shows a 5P joiner.

Insulating piece — UL Listed

Used to separate circuits by providing an insulated section on the line. In addition to providing insulation between two circuits, it can also feed power of different voltages.



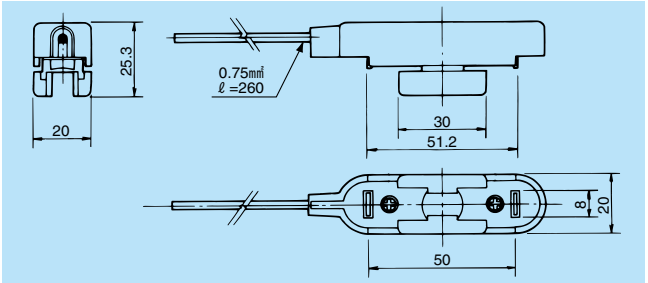

Cat. No.	Rating	Weight (kg)	Units per box	Units per carton
DH5681	1P300V1A	0.01	1	50

●Please use a special drill (DH5682) for insulating piece installation.

Special drill attachments

Special tools for mounting insulating pieces on a unit.

Note: UL standards do not apply.



Jig

Hole saw drill bit (ϕ15)





End mill drill bit (ϕ10)

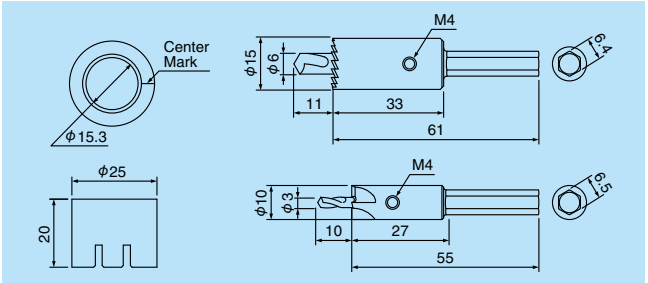

Cat. No.	Weight (kg)	Units per box	Units per carton
DH5682K	0.07	1	20

●The set consists of 2 different drills and a jig.

Line separator — UL Listed

Used to separate circuits by creating an insulated section partway along the line.



※5P(DH5665)

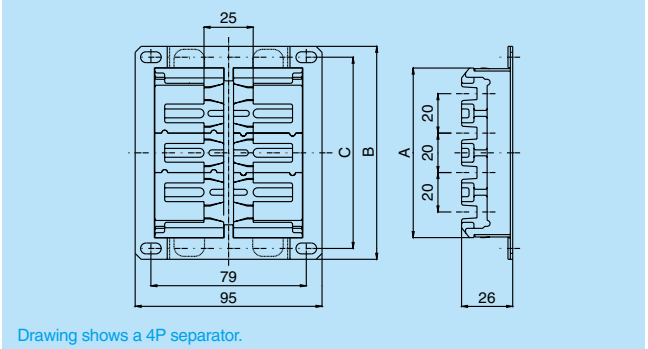

Drawing shows a 4P separator.

Cat. No.	Type	A	B	C	Weight (kg)	Units per box	Units per carton
DH5664	For 4P	86	108	97	0.20	1	10
DH5665	For 5P	106	128	117	0.23	1	10

Hanger — UL Listed

Used to mount the High-Tro-Reel units on the side of a rail. Can also be used with tension type units. Standard support interval is 400mm.



※5P(DH5775K2)

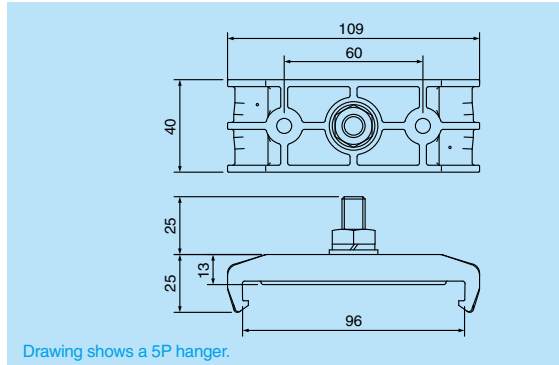

Drawing shows a 5P hanger.
ϕ6.5mm holes are not incorporated in 3P and 4P hangers.

Cat. No.	Type	A	B	C	Weight (kg)	Units per box	Units per carton
DH5773K2	For 3P	69	—	56	0.06	20	100
DH5774K2	For 4P	89	—	76	0.07	10	50
DH5775K2	For 5P	109	60	96	0.08	10	50
DH5776K2	For 6P	129	80	116	0.09	10	50

Guide cap (right-angle cut) UL Listed

Used to guide the collector arms from one straight section to another via turntables and traversers. Can be used as an end cap.

※5P(DH5635)



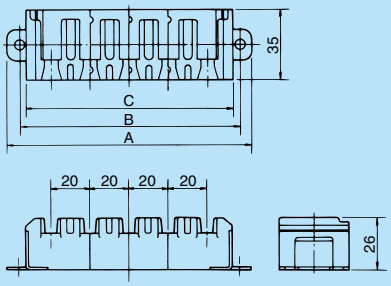

Drawing shows a 5P guide cap.

Cat. No.	Type	A	B	C	Weight (kg)	Units per box	Units per carton
DH5633	For 3P	85	73	66	0.05	1	30
DH5634	For 4P	105	93	86	0.06	1	30
DH5635	For 5P	125	113	106	0.08	1	30
DH5636	For 6P	145	133	126	0.09	1	30

Guide cap (protrusive 45° cut) UL Listed

Used to guide the collector arms from one curved section to another via traversers. The end is a front-facing 45° angle.

※5P(DH5645)



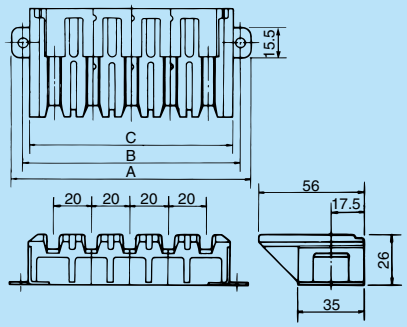

Drawing shows a 5P guide cap.

Cat. No.	Type	A	B	C	Weight (kg)	Units per box	Units per carton
DH5643	For 3P	85	73	66	0.07	1	30
DH5644	For 4P	105	93	86	0.09	1	30
DH5645	For 5P	125	113	106	0.11	1	30
DH5646	For 6P	145	133	126	0.13	1	30

Guide cap (withdrawn 45° cut) UL Listed

Used to guide the collector arms from one curved section to another via traversers. The end is a rear-facing 45° angle.

※5P(DH5655)



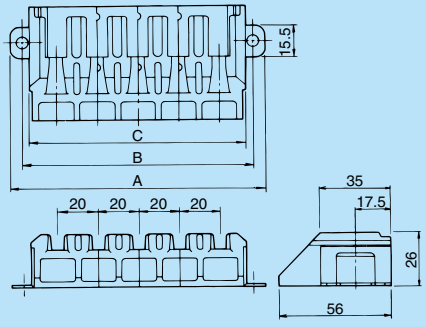

Drawing shows a 5P guide cap.

Cat. No.	Type	A	B	C	Weight (kg)	Units per box	Units per carton
DH5653	For 3P	85	73	66	0.07	1	30
DH5654	For 4P	105	93	86	0.09	1	30
DH5655	For 5P	125	113	106	0.11	1	30
DH5656	For 6P	145	133	126	0.13	1	30

Collector arms UL Listed

Attached to the moving equipment and used to supply power from the High-Tro-Reel units to the equipment. Mount rod and mount plate types are available to fit mounting hardware.

●Single type (for mount rod)



●Single type (no saddle)



●Tandem type (for mount rod)



●Tandem type (for mount plate)



The collector arms should be replaced when it wears down to the replacement indication line. Typical collector service life is approximately 20,000km.

Length of lead wire 300mm

Cat. No.	Type	Rating	Weight (kg)	Units per box	Units per carton
DH56901K1	Single (for mount rod)	1P600V30A	0.14	1	16
DH56911K1	Tandem (for mount rod)	1P600V30A×2	0.23	1	16
DH56912K1	Tandem (for mount plate)	1P600V30A×2	0.23	1	16
DH56920K1	Single (no saddle)	1P600V30A	0.11	1	16

●Single type (for mount rod)

Note: Does not include mount rod 12×12.

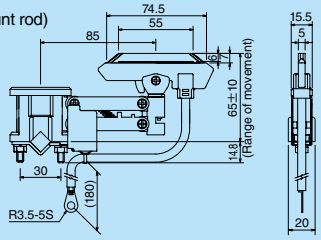

●Tandem type (for mount rod)

Note: Does not include mount rod 12×12.

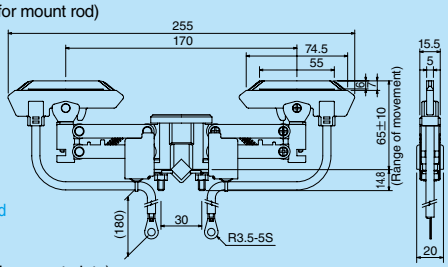

●Tandem type (for mount plate)

Note: Does not include mount plate for mounting.

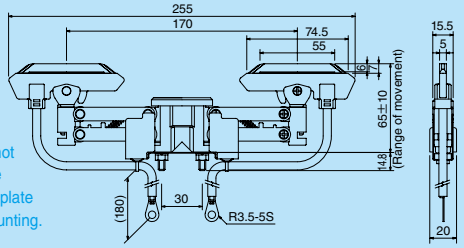

●Single type (no saddle)

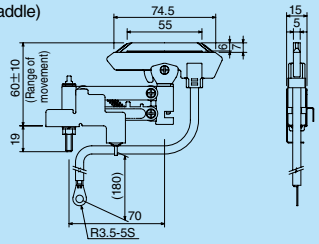

Unit:mm

Collector arms (with flat connection terminals)

Collectors can be easily connected and disconnected to/from lead wires with just one motion.
Mount rod and mount plate types are available to fit mounting hardware.

Note: UL certification not yet obtained.

●Single type (for mount rod)

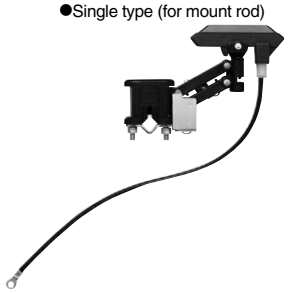

●Single type (no saddle)

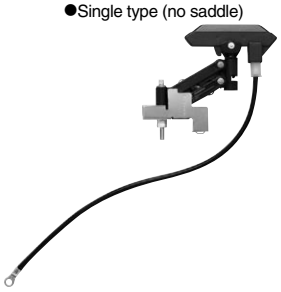

●Tandem type (for mount rod)



●Tandem type (for mount plate)



The collector arms should be replaced when it wears down to the replacement indication line. Typical collector service life is approximately 20,000km.

Length of lead wire 300mm

Cat. No.	Type	Rating	Weight (kg)	Units per box	Units per carton
DH56931K1	Single (for mount rod)	1P600V20A	0.14	1	16
DH56941K1	Tandem (for mount rod)	1P600V20A×2	0.23	1	16
DH56942K1	Tandem (for mount plate)	1P600V20A×2	0.23	1	16
DH56950K1	Single (no saddle)	1P600V20A	0.11	1	16

●Single type (for mount rod)

●Tandem type (for mount rod)

●Tandem type (for mount plate)

●Single type (no saddle)

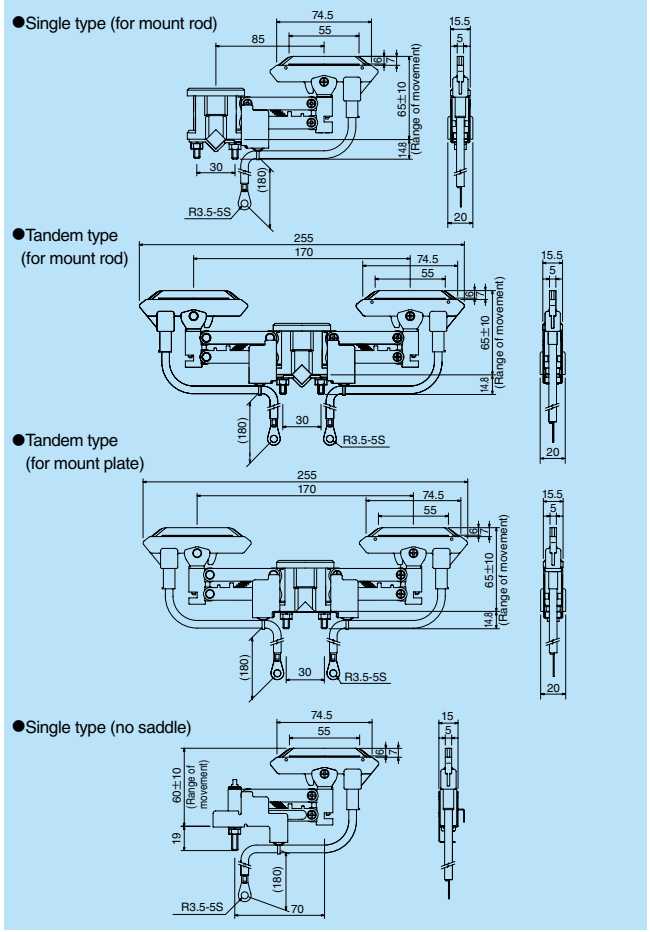

Collector arm support hardware

These components are mounted on the collector arm.
They keep the arm horizontal and minimize uneven abrasion of the collector shoe.
It is also possible to mount them on existing collector arms.

Note: UL standards do not apply.

●Single type (no saddle)



●Tandem type and single type (for mount rod)



●Tandem type (for mount plate)



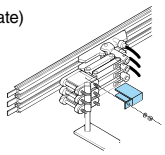

※Two units are required when mounting on the tandem type.

Cat. No.	Type	Weight (kg)	Units per box	Units per carton
DH58870	Single (no saddle)	0.013	12	120
DH58871	Tandem, Single (for mount rod)	0.007	12	120
DH58872	Tandem (for mount plate)	0.017	12	120

Conductor cleaner

This nylon brush is used to clean the conductor surface of the High-Tro-Reel units.

Note: UL standards do not apply.



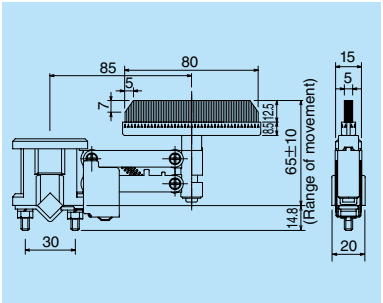

Cat. No.	Type	Weight (kg)	Units per box	Units per carton
DH56851K1	Single (for mount rod)	0.12	1	16

Collector (replacement part)

Note: UL standards do not apply.

Note: This collector is a replacement part for using collector arms which are of an earlier type than the collector arms listed on page 25 of this catalog.



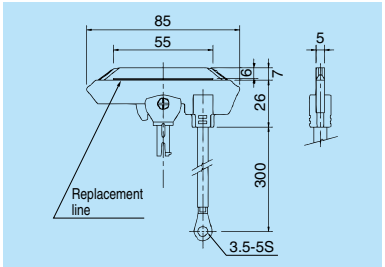

Length of lead wire 300mm

Cat. No.	Rating	Weight (kg)	Units per box	Units per carton
DH5683K3	1P600V30A	0.06	10	100

Collector (with flat connection terminals; replacement part)

Collectors can be easily connected and disconnected to/from lead wires with just one motion.

Note: UL standards do not apply.

Note: This collector is a replacement part for using with collector arms which are of an earlier type than the collector arms listed on page 26 of this catalog.



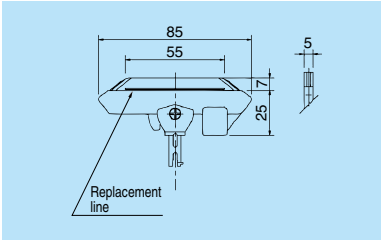

Cat. No.	Rating	Weight (kg)	Units per box	Units per carton
DH5684K2	1P600V20A	0.12	10	100