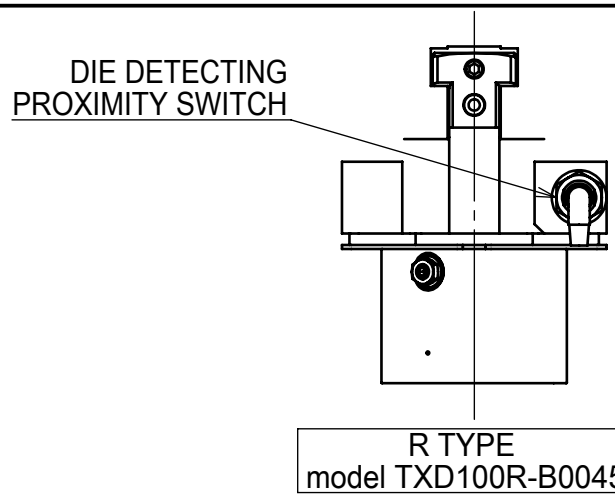

R TYPE
model TXD100R-B0045

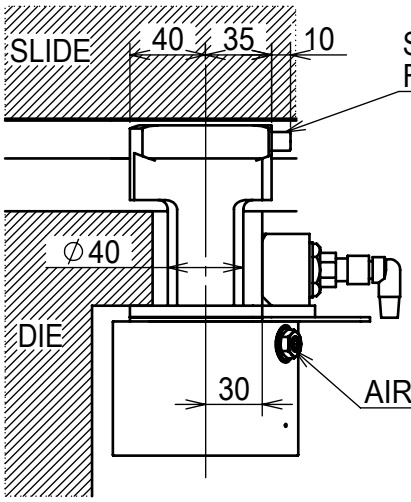

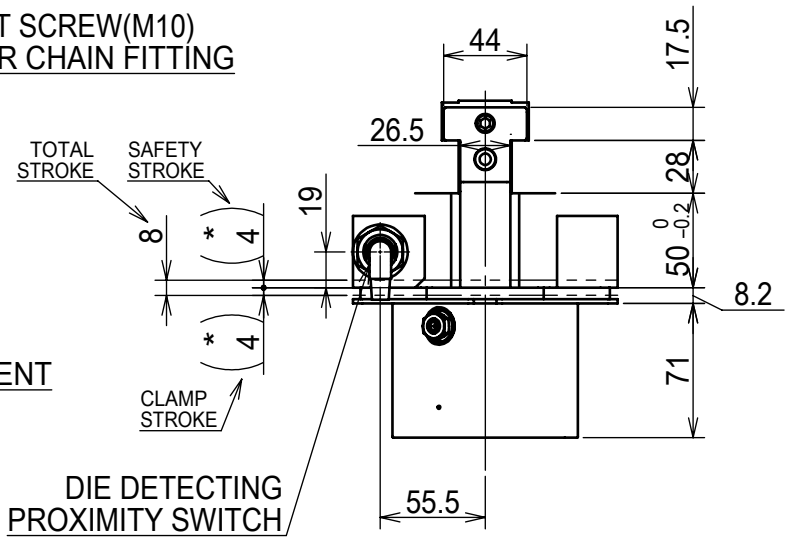

L TYPE
model TXD100L-B0045

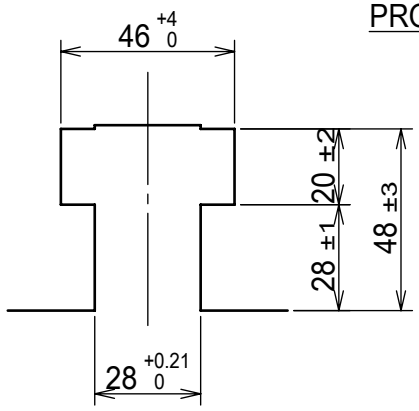

T-SLOT (SCALE 1:2)

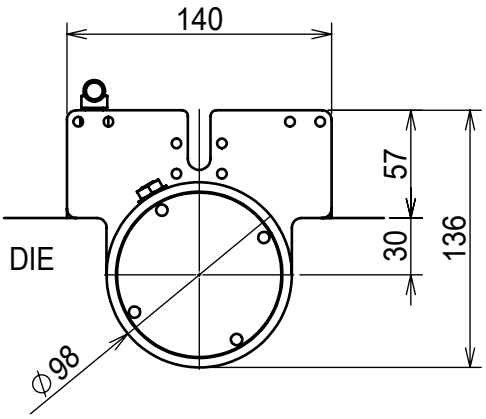

*:参考寸法
*:REFERENCE DIMENSIONS
本図はTXD100L-B0045を示します。
R型(TXD100R-B0045)は近接スイッチの位置が勝手反対となります。
THIS DRAWING SHOWS TXD100L-B0045
FOR R TYPE(TXD100R-B0045), THE PROXIMITY SWITCH IS LOCATED
SYMMETRICAL TO THIS DRAWING.

REVISION HISTORY			TX10B-004-5 58501B0009
SCALE 1:4	MODEL TXD100L/R-B0045	DATE 2015/04/07	DESIGNED BY 88010
	NAME PASCAL CLAMP	DWG.NO. 4PRXC84600	

A4

Pascal

[PDF] [AS]
原紙 04-07 本田哲二(退)