Pascal traveling clamp

Three kinds of clamp sliding methods are provided as follows ; -

model TRA

Air Cylinder driven

Slim figure type

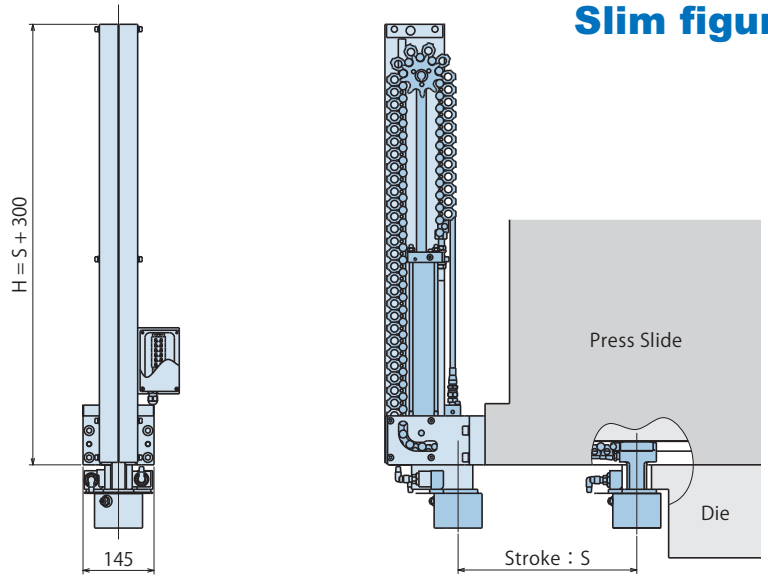

model TRB

Air Rotary Actuator driven

Short figure type

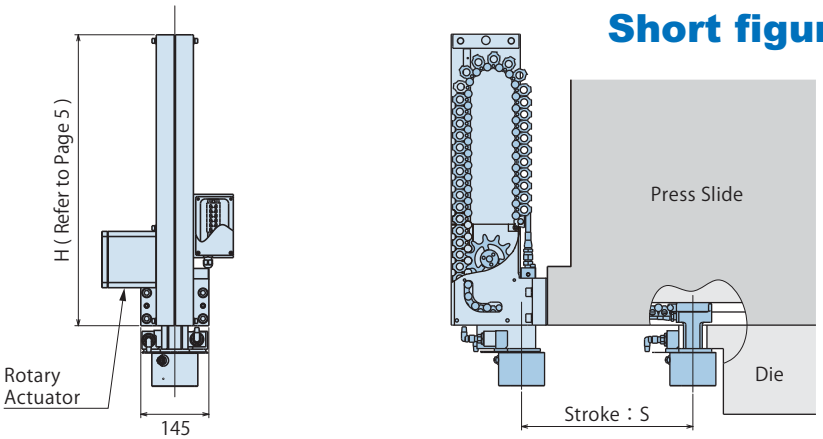

model TRC

Electric Motor driven

Short figure type

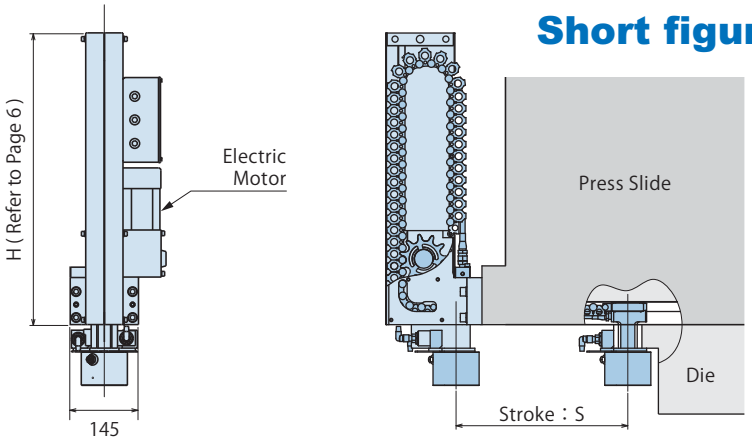

Class Definition TR [A] E [X06] – [0800] L

① ② ③ ④

① Model A, B, C (See above)

② Clamp Model X04 : model TXD040 (Clamping force 39.2 kN)
X06 : model TXD063 (Clamping force 61.7 kN)
X10 : model TXD100 (Clamping force 98.0 kN)

③ Traveling Stroke A : 0400 ~ 1300 mm B, C : 0400 ~ 0900 mm

④ Terminal Box • proximity switch location
(Rotary actuator and electric motor housing included with model TRB and TRC)
L : As shown in the above diagram R : Inverted placement of L