Accelerometer TM0782A

General Purpose, Industrial Piezoelectric Accelerometers

The TM0782A-K accelerometer kit consists of one accelerometer and one 5 meter cable. This accelerometer kit directly interfaces with ProvibTech's signal conditioners: DTM, TR transmitters, DM Dual Monitors and PT580 vibration switches to measure case vibration in acceleration or velocity.



Specifications

Electrical

Sensitivity:	100mV/g, @ 25°C, ±10%
Frequency Response:	0.5 - 10,000Hz (±3dB)
Acceleration Range:	50g
Isolation:	Fully isolated
Electrical Noise:	0.0007g
Power Requirement:	2 - 10mA constant current
	18 - 30VDC
Bias Voltage:	10 - 14VDC

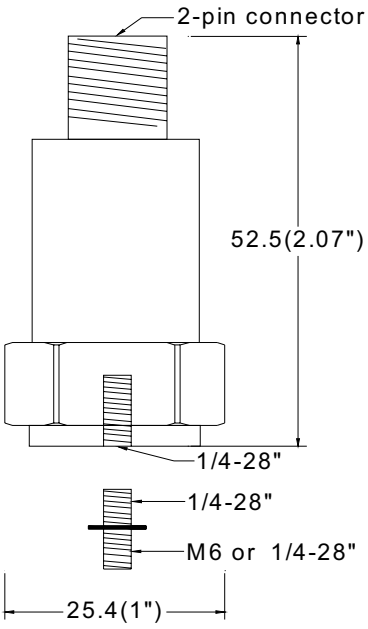

Resonance Frequency:	30 kHz
Maximum Transmission Distance:	300 meters (1,000 feet)

Environmental and Physical

Temperature Range:	-50°C to +120°C
Environmental Protection:	IP67
Weight:	90 grams
Case Material:	Stainless Steel
Mounting:	1/4-28UNF tapped hole
Installation Torque:	29N x M

Hazardous Area Approval:

ATEX: II 1 G Ex ia IIC T4

CSA: Class I, Div. 1, Groups A, B, C and D
I.S. Class I, Div. 1, Group A,B,C,D and T4,
Ex ia IIC T4
CSA: Class I, Div.2, Groups A, B, C, D
Non- Incendive

PCEC: Ex ia IIC T4

TR CU: 0Ex ia IIC T4 X
№ ТС RU C-US.ГБ05.В.00477
NANIO CCVE

Connection

A: Power (red)
B: COM (white)
Shield

Order Information

TM0782A-M
Accelerometer with mounting screw 1/4-28” to M6×1

TM0782A-E
Accelerometer with mounting screw 1/4-28” to 1/4-28”

TM0782A-K-M
Accelerometer kit includes:
- ✓ TM0782A accelerometer
- ✓ Mounting screw (1/4-28” to M6×1)
- ✓ TM0702-05

TM0782A-K-E
Accelerometer kit includes:
- ✓ TM0782A accelerometer
- ✓ Mounting screw (1/4-28” to 1/4-28”)
- ✓ TM0702-05

TM0782A-M-S
Accelerometer with mounting screw 1/4-28” to M6×1
Hazardous area approval

TM0782A-E-S
Accelerometer with mounting screw 1/4-28” to 1/4-28”
Hazardous area approval

.

Accessories:

(Standard cable length is 5 meters. XX = 05)



TM0702-XX: Aluminum MIL connector with XX meters cable, 7mm diameter. < 120°C (250°F)



TM0703-XX: Seal tight boot connector with XX meters cable, 7mm diameter. < 120°C (250°F)



TM0704-XX: Stainless steel MIL connector with armored XX meters cable, 7mm diameter. < 150°C (300°F), Maximum Length is 10 meters.



TM0705-XX: Cornered MIL connector with armored XX meters cable, 7mm diameter.
< 120°C (250°F), Maximum Length is 10 meters.

TM0710: Mounting screw 1/4-28” - M6×1
TM0711: Mounting screw 1/4-28” - 1/4-28”
TM0712: Mounting screw 1/4-28” - M8
TM0713: Mounting screw 1/4-28” - M10