Operating Levers

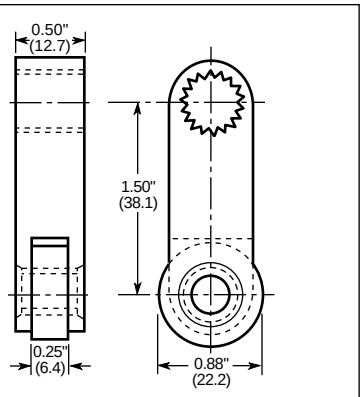

Standard Operating Lever
EL010-53420 (D-1260)
(for .500 Dia. Shaft Switches)

For Series:
EA040, EA060, EA080, EA130, EA140, EA170, EA700, EA710, EA730, EA760, EA770, EA780, EA790, EA800, EA880, EA990

Select the operating lever for your application with regards to dimensions and materials required.

Requests for operating levers not shown should include lever style and all pertinent information as to limit switch number, dimensions, materials, etc.

Depending upon your application, levers are available in cold rolled steel, stainless steel, or bronze. Rollers are available in steel, nylon, Bryl. Cop., stainless steel or steel ball bearings. Please consult materials column of the lever of your choice.

This style and size operating lever is considered standard for the majority of snap-lock switch installations. The EL010-53420 (D1260) lever is steel with a nylon roller and a stainless steel roller pin. Like all snap-lock levers, the serrated mounting hole matches the serrated lever shaft of the switches to provide fixed adjustment of the lever in 7.5° increments.

For Series EA040, 060, 080, 130, 140, 170, 700, 710, 730, 760, 770, 780, 790, 800, 880, 990

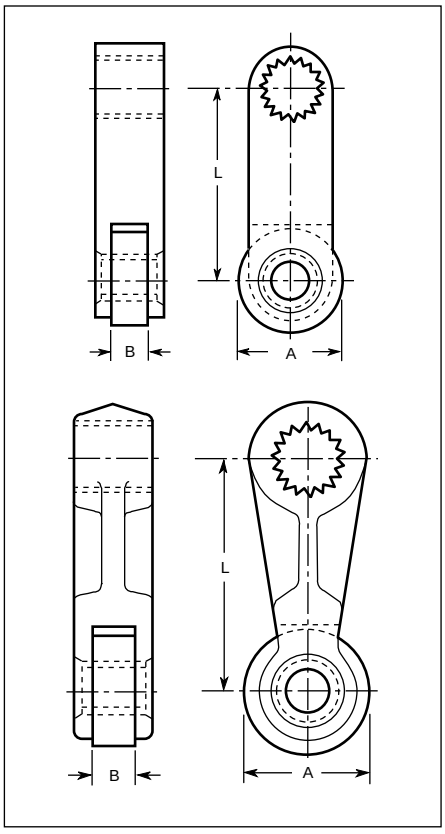

Style R - *Regular Straight Type*

Ordering Numbers					Material	
Part Number	Reference	L	A	B	Lever	Roller
EL060-50320	D1260BA	3/4	3/4	1/4	C.R.S.	C.R.S.
EL060-51319	—	1	3/4	1/4	C.R.S.	Bryl. Cop.
EL060-52321	D1260GQ	1-1/4	3/4	1/4	C.R.S.	C.R.S.
EL060-53923	D1260BH	1-1/2	1-1/4	1/4	C.R.S.	C.R.S.
EL010-53338	DS1260	1-1/2	3/4	1/4	Steel	C.R.S.
EL060-53300	—	1-1/2	3/4	1/4	Brass	Bryl. Cop.
EL010-53336	—	1-1/2	3/4	1/4	Steel	S.S.
EL010-53337	—	1-1/2	3/4	1/4	Steel	Bryl. Cop.
EL060-53401	D126ORF	1-1/2	7/8	9/32	Brass	Nylon
EL060-53402	—	1-1/2	7/8	9/32	Brass	Bryl. Cop.
EL010-53420	D1260	1-1/2	7/8	9/32	Steel	Nylon
EL010-53429	D1260Y	1-1/2	7/8	9/32	Steel	B.B.
EL060-53536	D1260Z	1-1/2	1	1/4	C.R.S.	C.R.S.
EL060-53926	D1260CL	1-1/2	1-3/8	1/4	C.R.S.	C.R.S.
EL060-55327	D1260E	2	3/4	1/4	C.R.S.	C.R.S.
EL060-55300	—	2	3/4	1/4	C.R.S.	Bryl. Cop.
EL060-55520	D1260AC	2	1	1/4	C.R.S.	C.R.S.
EL060-55601	—	2	1	1/4	C.R.S.	Bryl. Cop.
EL060-55530	D1260RT	2	1	1/4	Brass	Bryl. Cop.
EL060-55927	D1260GT	2	1-1/2	1/4	C.R.S.	C.R.S.
EL060-50321	D1260BC	2-1/8	3/4	1/4	C.R.S.	C.R.S.
EL060-50501	D1260B	2-1/8	1	1/4	C.R.S.	C.R.S.
EL060-50334	D1260M	2-1/4	3/4	1/4	C.R.S.	C.R.S.
EL060-59300	D1260KC	2-3/8	3/4	1/4	C.R.S.	C.R.S.
EL010-56427	D1260K	2-1/2	7/8	9/32	Steel	Nylon
EL010-56334	DS1260K	2-1/2	3/4	1/4	Steel	C.R.S.
EL010-55421	D1260DF	2-1/2	1	1/4	C.R.S.	C.R.S.
EL060-56500	D1260RR	2-1/2	1	1/4	Brass	Bryl. Cop.
EL060-56920	D1260CP	2-1/2	1-1/2	1/4	C.R.S.	C.R.S.
EL060-50322	D1260BD	2-3/4	3/4	1/4	C.R.S.	C.R.S.
EL060-57300	—	2-3/4	3/4	1/4	C.R.S.	Bryl. Cop.
EL010-58300	—	3	3/4	1/4	Steel	Bryl. Cop.
EL010-58337	DS1260L	3	3/4	1/4	Steel	C.R.S.
EL060-58305	—	3	3/4	1/4	Brass	Bryl. Cop.
EL010-58400	—	3	7/8	9/32	Steel	Bryl. Cop.
EL010-58423	D1260L	3	7/8	9/32	Steel	Nylon
EL010-58451	—	3	7/8	9/32	Steel	C.R.S.
EL060-58401	—	3	7/8	9/32	Brass	Nylon
EL060-58403	D1260VQ	3	7/8	9/32	S.S.	Bryl. Cop.
EL010-58521	D1260CJ	3	1	1/4	Steel	C.R.S.
EL010-58522	—	3	1	1/4	C.R.S.	Bryl. Cop.
EL010-58923	D1260CN	3	1-1/4	1/4	Steel	C.R.S.
EL060-58923	—	3	1-1/4	1/4	Brass	Steel
EL010-58900	D1260VR	3	1-1/2	1/4	Steel	Nylon
EL010-58920	D1260AE	3	1-1/2	1/4	Steel	C.R.S.
EL060-58320	D1260BB	3-1/2	3/4	1/4	C.R.S.	C.R.S.
EL060-58431	D1260AP	3-1/2	1	1/4	C.R.S.	C.R.S.
EL060-58932	—	3-1/2	3/4	1/4	Brass	Bryl. Cop.
EL060-58930	—	3-1/2	1-1/2	1/4	Brass	Bryl. Cop.
EL060-58326	D1260C	4	3/4	1/4	C.R.S.	C.R.S.
EL060-58304	D1260WD	4	3/4	1/4	C.R.S.	Bryl. Cop.
EL060-50523	D1260BL	4	1	1/4	C.R.S.	C.R.S.
EL060-58925	—	4	1-1/4	1/4	Brass	Bryl. Cop.
EL060-58920	D1260AB	4	1-1/2	1/4	C.R.S.	C.R.S.
EL060-58901	—	4	1-1/2	9/32	C.R.S.	Nylon
EL060-50335	D1260N	5	3/4	1/4	C.R.S.	C.R.S.
EL060-50925	D1260BW	5	1-1/2	1/4	C.R.S.	C.R.S.
EL060-50305	D1260CQ	6	3/4	1/4	C.R.S.	C.R.S.
EL060-50338	—	6	3/4	1/4	C.R.S.	Bryl. Cop
EL060-50930	D1260JE	6	1-1/4	1/4	C.R.S.	C.R.S.
EL060-50703	D1260KD	6	3	1/4	C.R.S.	C.R.S.

All dimensions are in inches.

NAMCO

2013 West Meeting Street • Lancaster, SC 29720
1-803-286-8491 • FAX: 1-800-678-6263
www.namcocontrols.com

Operating Levers

For Series EA040, 060, 080, 130, 140, 170, 700, 710, 730, 760, 770, 780, 790, 800, 880, 990 Only

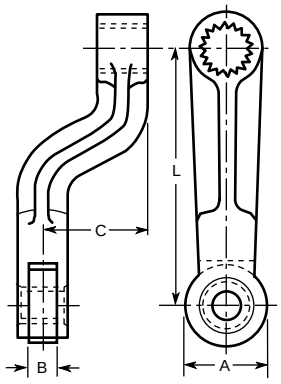

Offset lever with straddle-supported roller.

Style RLO - *Regular Lever Offset Type*

Ordering Numbers						Material	
Part Number	**Reference**	**L**	**A**	**B**	**C**	**Lever**	**Roller**
***EL020-53326**	D1260GX	1-1/2	3/4	1/4	1-1/4	Mang. Br.	Steel
***EL020-53325**	D1260GU	1-1/2	3/4	1/4	1-3/16	Mang. Br.	Steel
EL020 55327	D1260HZ	2	3/4	1/4	1-1/8	Mang. Br.	Steel
***EL020-55300**	D1260JD	2	3/4	1/4	1-1/2	Mang. Br.	Steel
EL020-56320	D1260BT	2-1/2	3/4	1/4	1	Mang. Br.	Steel
***EL020-56321**	D1260DW	2-1/2	3/4	1/4	2-1/4	Mang. Br.	Steel
EL020-56421	D1260DG	2-1/2	1	1/4	1	Mang. Br.	Steel
EL020-58922	D1260FT	3	1-1/4	1/4	1-1/4	Mang. Br.	Steel
EL020-58923	—	3	1-1/4	1/4	1-1/4	Mang. Br.	S.S.
EL020-59900	D1260AY	5-1/2	1-1/2	1/4	1-3/4	C.R.S.	Steel

**On Series EA040/060/080/170, Lever will not clear top of switch when mounted with Roller facing the rear.*

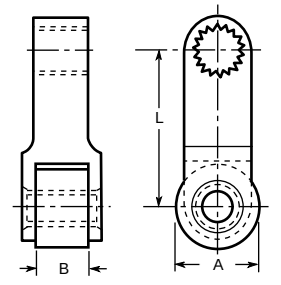

Machined lever with wide roller straddle-supported directly in line with the serrated mounting hole.

Style RW - *Wide Roller Regular Type*

Ordering Numbers					Material	
Part Number	**Reference**	**L**	**A**	**B**	**Lever**	**Roller**
EL070-53501	D1260AJ	1-1/2	1	1/2	C.R.S.	Bryl. Cop.
EL070-50507	D1260CY	1-5/8	1	1/2	C.R.S.	Bryl. Cop.
EL070-56921	D1260DY	2-1/2	1-1/4	1/2	C.R.S.	Steel
EL060-00024	D1260AL	3	1-1/2	1/2	C.R.S.	Steel
EL070-50921	D1260BE	4	1-1/4	1/2	C.R.S.	Steel

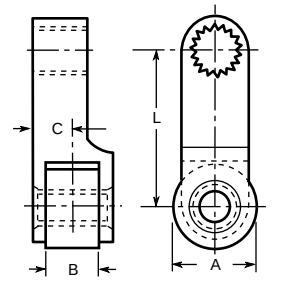

Lever provides straddle-type support for wide roller, which is offset from serrated lever hub. Side toward switch is machined straight.

Style RWO - *Wide Roller Offset Type*

Ordering Numbers						Material	
Part Number	**Reference**	**L**	**A**	**B**	**C**	**Lever**	**Roller**
EL080-53329	D1260R	1-1/2	3/4	1/2	3/8	Mang. Br	Steel
EL080-53932	D1260P	1-1/2	1-1/2	1/2	3/8	C.R.S.	Steel
EL080-55323	D1260FR	2	3/4	1/2	3/8	C.R.S.	Steel
EL080-54905	D1260DD	2	1-1/2	1/2	3/8	C.R.S.	C.R.S.
EL080-56301	D1260AH	2-1/2	3/4	1/2	3/8	C.R.S.	Steel
EL080-56305	—	2-1/2	3/4	1/2	3/8	C.R.S.	Bryl. Cop.
EL080-58322	D1260GN	3	3/4	1/2	3/8	C.R.S.	Steel
EL080-58901	D1260DE	3	1-1/2	1/2	3/8	C.R.S.	Steel
EL080-58906	D1260DZ	3-1/2	1-1/2	1/2	3/8	C.R.S.	Steel
EL080-58909	D1260HA	4	1-1/2	1/2	3/8	C.R.S.	Steel
EL080-50924	D1260BS	6	1-1/2	1/2	3/8	C.R.S.	Steel

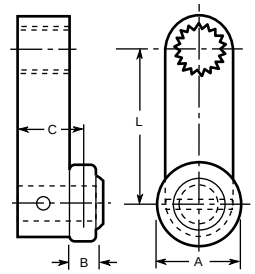

Side supported roller offset on front side of lever machined with straight sides

Style S - *Side Roller Type*

Ordering Numbers						Material	
Part Number	**Reference**	**L**	**A**	**B**	**C**	**Lever**	**Roller**
EL150-53303	—	1-1/2	3/4	3/4	7/8	C.R.S.	Bryl. Cop.
EL150-53301	D1260A	1-1/2	3/4	1/4	5/8	C.R.S.	Steel
EL150-53300	D1260DU	1-1/2	3/4	3/4	7/8	C.R.S.	Steel
EL150-53901	D1260HV	1-1/2	1-1/4	1/4	5/8	C.R.S.	Steel
EL150-55300	—	2	3/4	1/2	3/4	C.R.S.	Bryl. Cop.
EL150-55303	D1260DT	2	3/4	1/4	5/8	C.R.S.	Steel
EL150-55301	D1260JJ	2	3/4	1/2	3/4	C.R.S.	C.R.S.
EL150-56300	D1260DX	2-1/2	3/4	1/4	5/8	C.R.S.	C.R.S.
EL150-56500	—	2-1/2	1	1/2	3/4	C.R.S.	S.S.
EL150-57300	D1260DO	2-3/4	3/4	1/4	5/8	C.R.S.	C.R.S.
EL150-58901	—	4	1-1/4	1/4	5/8	Bronze	Nylon
EL150-58902	—	4	1-1/4	1/4	5/8	Bronze	Steel

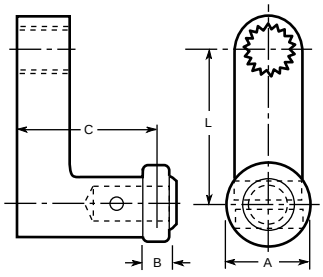

Right angle offset lever has side-supported roller mounted on end.

Style SLO - *Side Roller Lever Offset Type*

Ordering Numbers						Material	
Part Number	**Reference**	**L**	**A**	**B**	**C**	**Lever**	**Roller**
EL090-53324	D1260GZ	1-1/2	3/4	1/4	1	Bronze	Steel
EL090-53336	—	1-1/2	3/4	1/4	1-3/8	Bronze	Nylon
EL090-53321	D1260CT	1-1/2	3/4	1/4	1-3/8	Bronze	Steel
EL090-53322	—	1-1/2	3/4	1/4	1-3/8	Bronze	Bryl. Cop.
EL090-53328	D1260GV	1-1/2	3/4	1/4	2	Bronze	Steel

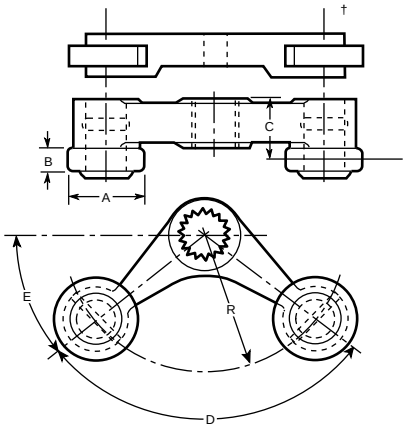

Angle type rocker arm has both side-supported rollers mounted on same side.

Style TS - *Two Roller Same Side*

Ordering Numbers								Material	
Part Number	**Reference**	**R**	**A**	**B**	**C**	**D**	**E**	**Lever**	**Roller**
EL040-50327	D1260CM	1-3/8	3/4	1/4	5/8	107°34'	36°	Bronze	Steel
EL040-50328	D1260JQ	1-3/8	3/4	1/2	3/4	107°34'	36°	Bronze	Steel
†EL040-58904	D1260JH	3	1-1/2	1/2	3/4	150°	15°	Bronze	Steel
†EL040-58905	—	3	1-1/2	1/2	3/4	150°	15°	Bronze	Bryl. Cop.

NAMCO

2013 West Meeting Street • Lancaster, SC 29720
1-803-286-8491 • FAX: 1-800-678-6263
www.namcocontrols.com

Operating Levers

For Series EA040, 060, 080, 130, 140, 170, 700, 710, 730, 760, 770, 780, 790, 800, 880, 990 Only

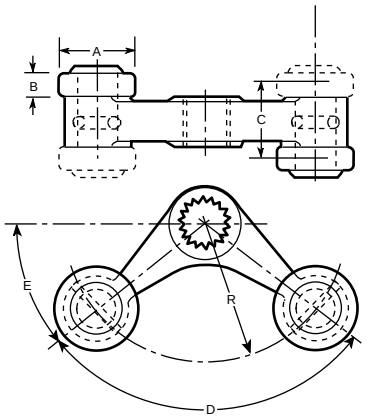

Angle type rocker lever has side-supported rollers mounted on opposite sides

Style TSO - *Two Roller Opposite Side*

Ordering Numbers								Material	
Part Number	Reference	R	A	B	C	D	E	Lever	Roller
EL030-50301	D1260AA	1-3/8	3/4	1/4	3/4	107°34'	36°13'	Bronze	Steel
EL030-50302	D1260DH	1-3/8	3/4	1/2	1	107°34'	36°13'	Bronze	Steel
EL030-52322	D1260DQ	1-1/2	3/4	3/4	1-1/4	90°	45°	Bronze	Steel

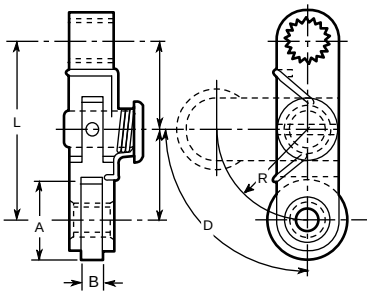

Single-loaded lever with straddle-supported roller. Used where switch action is required in one direction only—return movement of actuating mechanism does not operate the switch.

Style KR - *Knee Action Straight Type*

Ordering Numbers							Material	
Part Number	Reference	R	A	B	D	L	Lever	Roller
EL100-55401	D1260JM	1	7/8	1/4	90°	2	Steel	Steel
EL100-55402	—	1	7/8	1/4	90°	2	Steel	Bryl. Cop.
EL100-55403	—	1	7/8	1/4	90°	2	Steel	S.S.

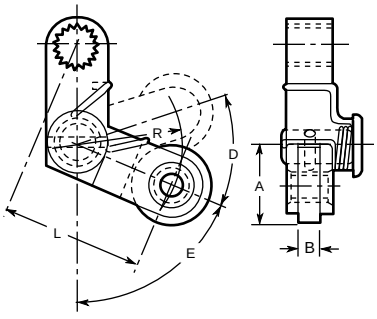

Spring-loaded offset lever with straddle-supported roller. Used where switch action is required in one direction only—return movement of actuating mechanism does not operate switch.

Style KRO - *Knee Action Offset Type*

Ordering Numbers								Material	
Part Number	Reference	R	A	B	D	E	L	Lever	Roller
EL110-50401	D1260JV	1-1/8	7/8	1/4	41°30'	67°30'	1-7/8	Steel	Steel

For Series EA040, 060, 080, 130, 140, 170, 700, 710, 730, 760, 770, 780, 790, 800, 880, 990 Only

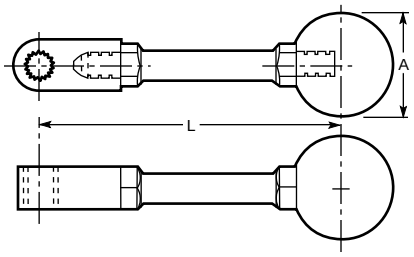

Steel shaft with bakelite knob.

Style M - *Manual Type*

Ordering Numbers				Material	
Part Number	**Reference**	**L**	**A**	**Lever**	**Knob**
EL050-58900	D1260EP-3	3	1-3/8	Steel	Bakelite
EL050-59901	D1260EP-1	4-1/16	1-3/8	Steel	Bakelite
EL050-59900	D1260EP	6-5/16	1-3/8	Steel	Bakelite

For Series EA700, 710, 730, 760, 770, 780, 790, 800, 880, 990 Only

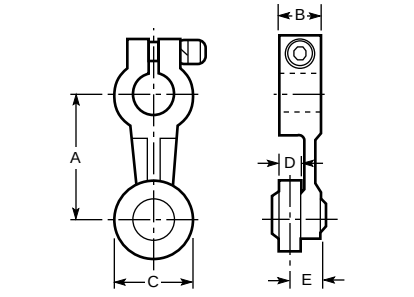

Nickel Plate Steel (N.P.S.) Lever Nickel Plated

Straight

Ordering Numbers							Material	
Part Number	**Reference**	**A**	**B**	**C**	**D**	**E**	**Lever**	**Roller**
EL010-62401	SL-160	1-1/2	1/2	7/8	9/32	25/64	Zinc	Steel
EL010-63414	SL-160K	1-1/2	1/2	7/8	9/32	25/64	Zinc	S.S.
EL010-63415	SL-160N	1-1/2	1/2	7/8	9/32	25/64	Zinc	Nylon

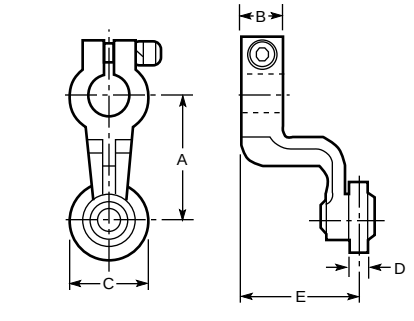

Lever Nickel Plated

Offset

Ordering Numbers							Material	
Part Number	**Reference**	**A**	**B**	**C**	**D**	**E**	**Lever**	**Roller**
EL020-63412	SL-160C	1-1/2	1/2	7/8	9/32	1-7/16	Zinc	Steel
EL020-63414	SL-160L	1-1/2	1/2	7/8	9/32	1-7/16	Zinc	Nylon
EL020-63415	SL-160S	1-1/2	1/2	7/8	9/32	1-7/16	Zinc	S.S.

2013 West Meeting Street • Lancaster, SC 29720
1-803-286-8491 • FAX: 1-800-678-6263
www.namcocontrols.com

Operating Levers

For Series EA700, 710, 730, 760, 770, 780, 790, 800, 880, 990 Only

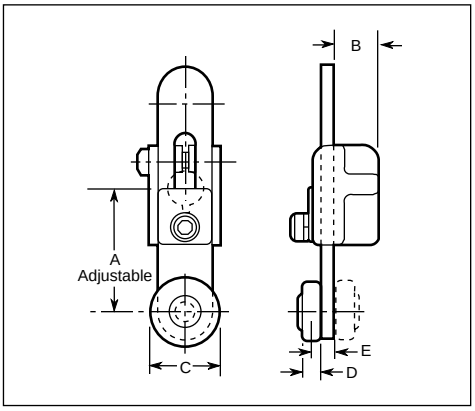

Adjustable Straight

Ordering Numbers							Material	
Part Number	Reference	A	B	C	D	E	Lever	Roller
EL120-60400	SL-170A	1-3/4-3	21/32	7/8	9/32	11/32	Steel	Steel
EL120-60600	SL-170C	1-7/8-3	21/32	2	9/32	11/32	Steel	Steel
EL120-69415	SL-170K	1-3/4-3	21/32	7/8	9/32	11/32	Steel	Nylon
EL120-69421	SL-170R	3-3/4-5	21/32	7/8	9/32	11/32	Steel	Steel
EL120-60601	—	3-3/4-5	21/32	2	9/32	11/32	Steel	Steel

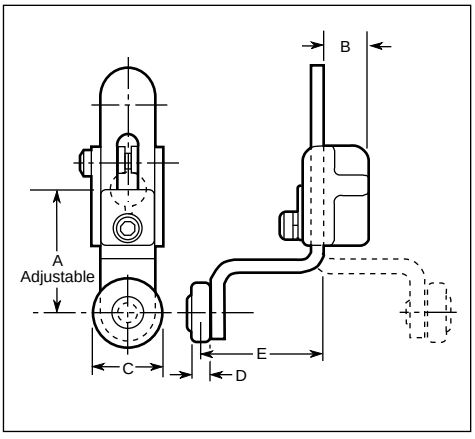

Adjustable Offset

Ordering Numbers							Material	
Part Number	Reference	A	B	C	D	E	Lever	Roller
EL130-64410	SL-170	1-3/4-3	21/32	7/8	9/32	1-25/32	Steel	Steel
EL130-69410	SL-170D	1-3/4-3	21/32	7/8	9/32	1-25/32	Steel	Nylon
EL130-69412	SL-170F	1-3/4-3	21/32	7/8	9/32	2-3/8	Steel	Steel
EL130-69413	SL-170G	1-3/4-3	21/32	7/8	9/32	3-1/2	Steel	Steel
EL130-69414	SL-170J	1-3/4-3	21/32	7/8	9/32	15/16	Steel	Steel
***EL130-69411**	SL-170E	1-3/4-3	21/32	7/8	9/32	1-9/32	Steel	Steel
EL130-20401	—	1-3/4-3	21/32	7/8	17/64	3-1/2	Steel	Nylon

**Roller mounted on opposite side*

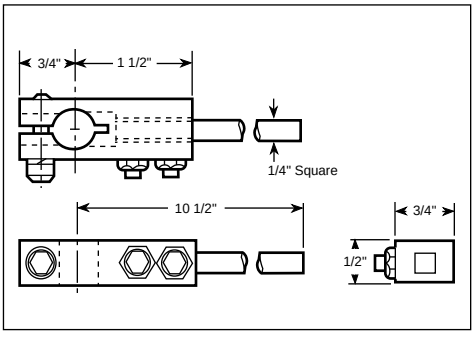

Rod Lever

Ordering Numbers			
Part Number	Reference	Dimensions	Material
EL140-69917	SL170M-1	Other rod lengths available to suit requirements	Steel Rod

For Series EA040, 060, 080, 130, 140, 170, 700, 710, 730, 760, 770, 780, 790, 800, 880, 990 Only

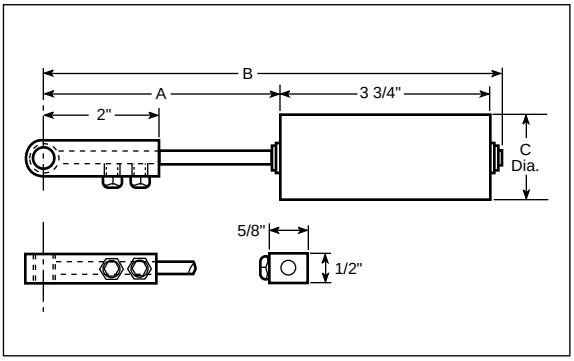

Style VR - *Belt Mis-Alignment Lever-Adjustable*

Ordering Number	"A" (Adjustable)	"B" Max.	"C" Dia.	Material Lever	Material Roller
EL140-58500	4.45/3.82"	8.38"	1.50"	Steel	Delrin
EL140-58600	4.45/3.82"	8.38"	2.50"	Steel	Delrin

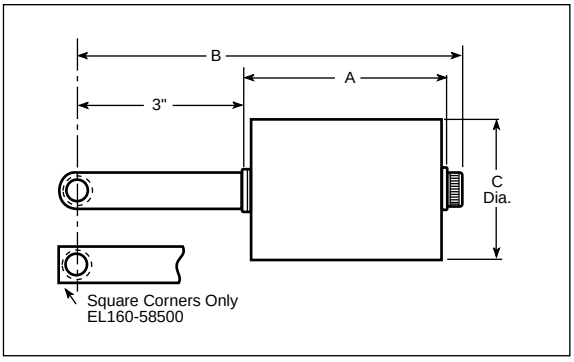

Style YR - *Belt Mis-Alignment Lever*

Ordering Number	"A"	"B" Max.	"C" Dia.	Material Lever	Material Roller
EL160-58500	2.24"	5.64"	1.25"	Steel	Nylon
EL160-58600	3.50"	6.90"	2.50"	Steel	Nylon

NAMCO

2013 West Meeting Street • Lancaster, SC 29720
1-803-286-8491 • FAX: 1-800-678-6263
www.namcocontrols.com