Kingbright

2.0x1.25mm SMD CHIP LED LAMP



ATTENTION
OBSERVE PRECAUTIONS
FOR HANDLING
ELECTROSTATIC
DISCHARGE
SENSITIVE
DEVICES

Part Number: APHCM2012QBC/D-F01 Blue

Features

- 2.0X1.25mm SMT LED,0.5mm max. thickness.
- Low power consumption.
- Wide viewing angle.
- Ideal for backlight and indicator.
- Package : 2000pcs / reel.
- Moisture sensitivity level : level 3.
- RoHS compliant.

Descriptions

- The Blue source color devices are made with InGaN Light Emitting Diode.
- Electrostatic discharge and power surge could damage the LEDs.
- It is recommended to use a wrist band or anti-electrostatic glove when handling the LEDs.
- All devices, equipments and machineries must be electrically grounded.

Package Dimensions

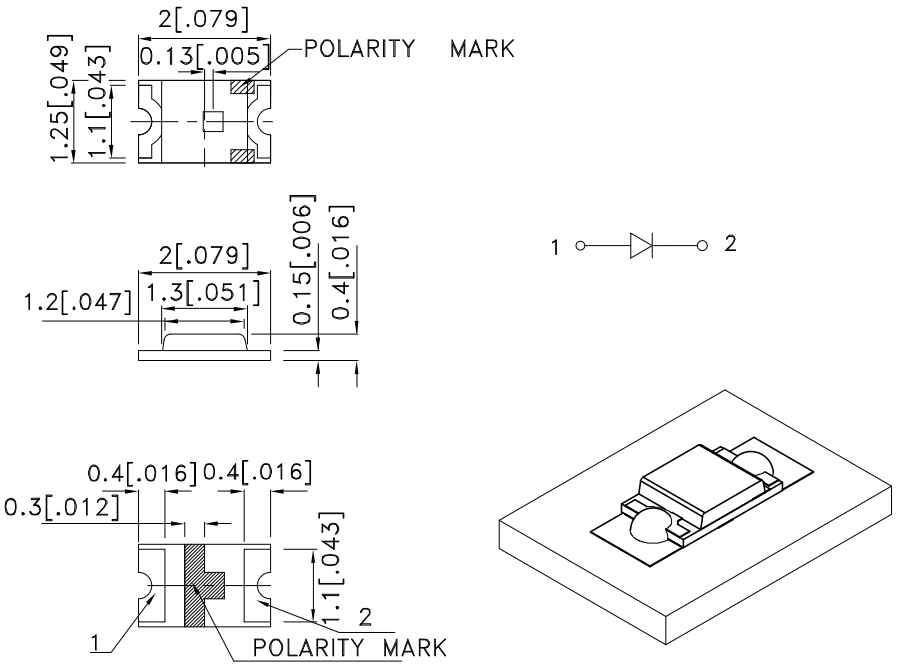

Notes:
1. All dimensions are in millimeters (inches).
2. Tolerance is ±0.1(0.004") unless otherwise noted.
3. The specifications, characteristics and technical data described in the datasheet are subject to change without prior notice.
4. The device has a single mounting surface. The device must be mounted according to the specifications.

Selection Guide

Part No.	Dice	Lens Type	Iv (mcd) [2] @ 20mA		Viewing Angle [1]
			Min.	Typ.	2θ1/2
APHCM2012QBC/D-F01	Blue (InGaN)	Water Clear	40	100	110°

Notes:
1.θ1/2 is the angle from optical centerline where the luminous intensity is 1/2 of the optical peak value.
2.Luminous intensity/ luminous Flux: +/-15%.
3.Luminous intensity value is traceable to the CIE127-2007 compliant national standards.

Electrical / Optical Characteristics at TA=25°C

Symbol	Parameter	Device	Typ.	Max.	Units	Test Conditions
λpeak	Peak Wavelength	Blue	460		nm	I_F=20mA
λD [1]	Dominant Wavelength	Blue	465		nm	I_F=20mA
Δλ1/2	Spectral Line Half-width	Blue	25		nm	I_F=20mA
C	Capacitance	Blue	100		pF	V_F=0V;f=1MHz
V_F [2]	Forward Voltage	Blue	3.3	4	V	I_F=20mA
I_R	Reverse Current	Blue		50	uA	V_R=5V

Notes:
1.Wavelength: +/-1nm.
2.Forward Voltage: +/-0.1V.
3.Wavelength value is traceable to the CIE127-2007 compliant national standards.
4.Excess driving current and/or operating temperature higher than recommended conditions may result in severe light degradation or premature failure.

Absolute Maximum Ratings at TA=25°C

Parameter	Blue	Units
Power dissipation	120	mW
DC Forward Current	30	mA
Peak Forward Current [1]	150	mA
Reverse Voltage	5	V
Operating Temperature	-40°C To +85°C	
Storage Temperature	-40°C To +85°C	

Note:
1. 1/10 Duty Cycle, 0.1ms Pulse Width.

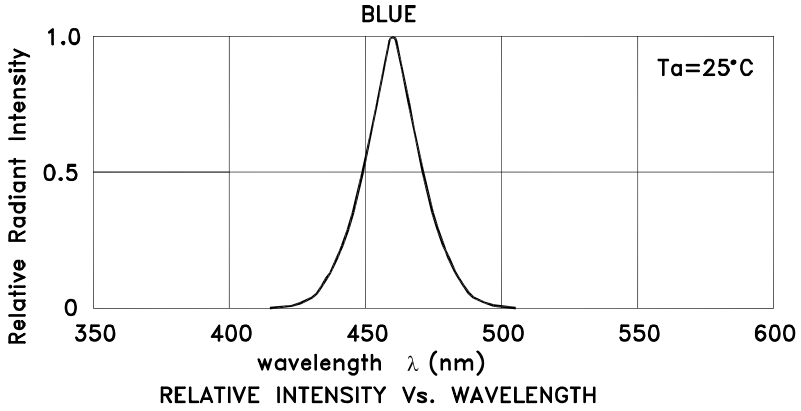

RELATIVE INTENSITY Vs. WAVELENGTH

Blue **APHCM2012QBC/D-F01**

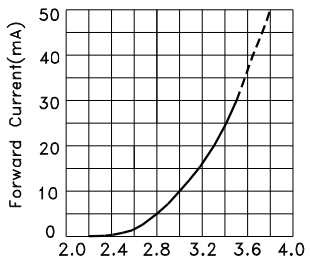

FORWARD CURRENT Vs.
FORWARD VOLTAGE

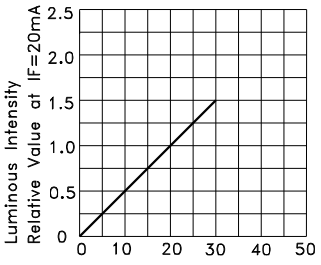

LUMINOUS INTENSITY Vs.
FORWARD CURRENT

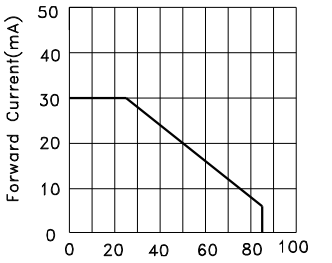

FORWARD CURRENT
DERATING CURVE

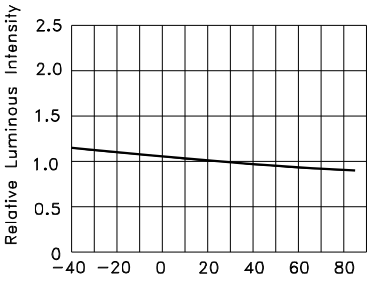

LUMINOUS INTENSITY Vs.
AMBIENT TEMPERATURE

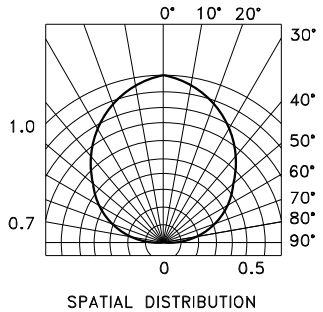

SPATIAL DISTRIBUTION

APHCM2012QBC/D-F01

Reflow soldering is recommended and the soldering profile is shown below.
Other soldering methods are not recommended as they might cause damage to the product.

Reflow Soldering Profile For Lead-free SMT Process.

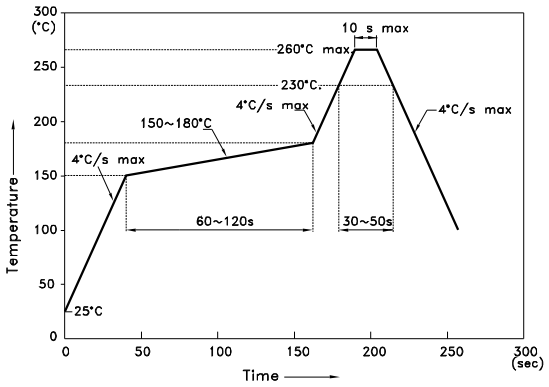

NOTES:
1. We recommend the reflow temperature 245°C(+/-5°C).The maximum soldering temperature should be limited to 260°C.
2. Don't cause stress to the epoxy resin while it is exposed to high temperature.
3. Number of reflow process shall be 2 times or less.

Recommended Soldering Pattern (Units : mm; Tolerance: ± 0.1)

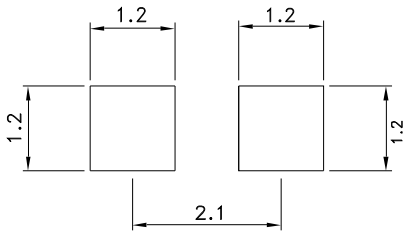

Reel Dimension

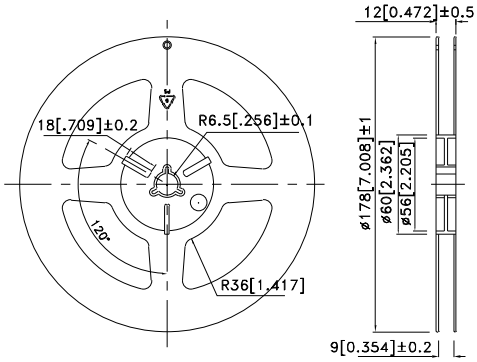

Tape Dimensions (Units : mm)

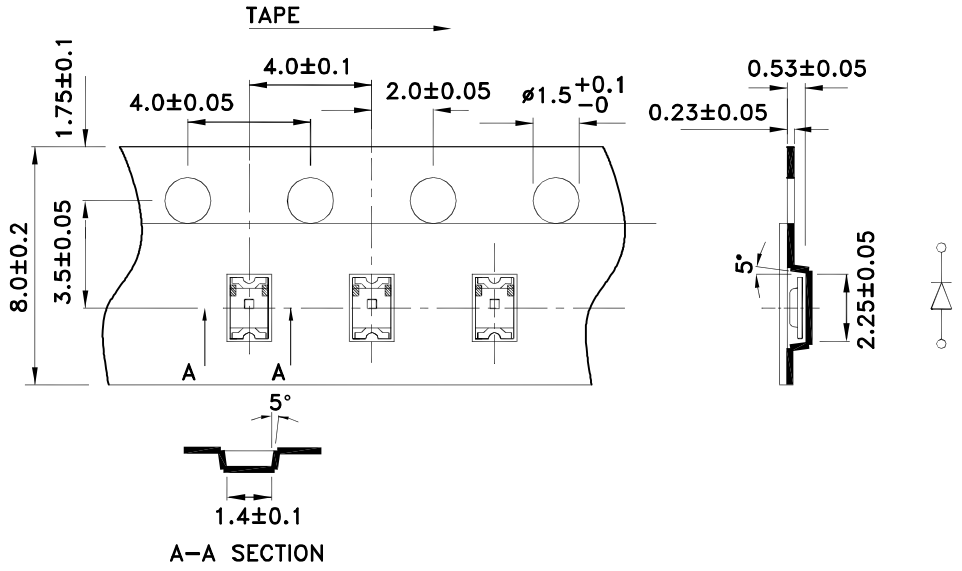

Kingbright

PACKING & LABEL SPECIFICATIONS **APHCM2012QBC/D-F01**

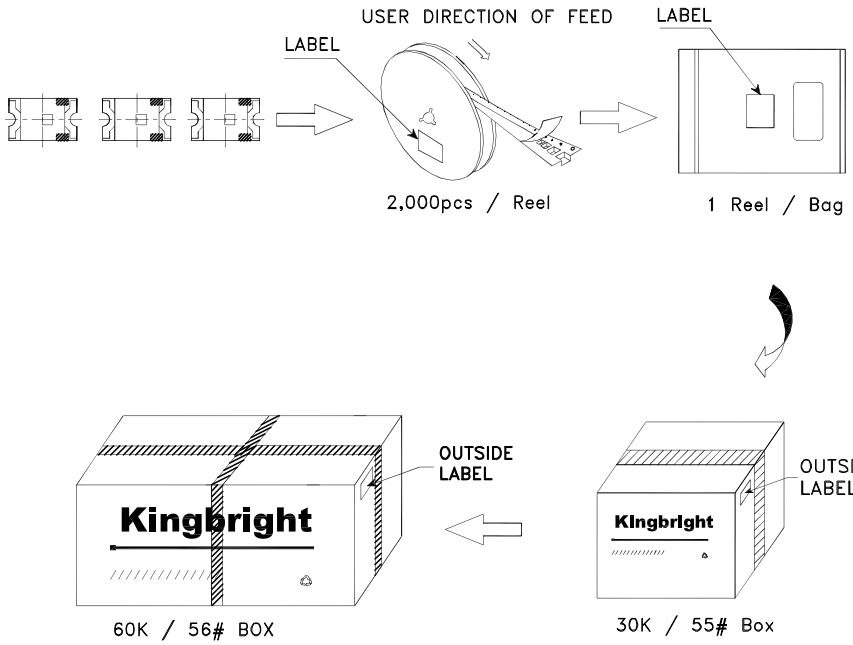

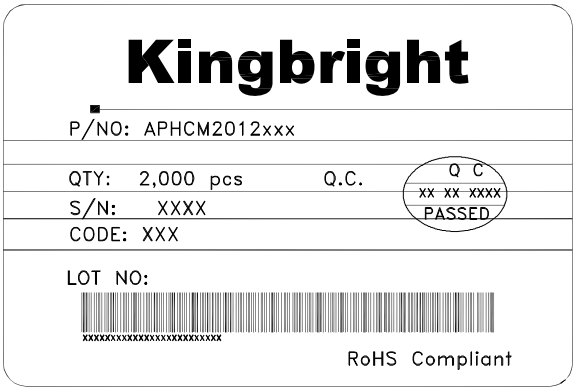

Terms and conditions for the usage of this document

1. The information included in this document reflects representative usage scenarios and is intended for technical reference only.
2. The part number, type, and specifications mentioned in this document are subject to future change and improvement without notice. Before production usage customer should refer to the latest datasheet for the updated specifications.
3. When using the products referenced in this document, please make sure the product is being operated within the environmental and electrical limits specified in the datasheet. If customer usage exceeds the specified limits, Kingbright will not be responsible for any subsequent issues.
4. The information in this document applies to typical usage in consumer electronics applications. If customer's application has special reliability requirements or have life-threatening liabilities, such as automotive or medical usage, please consult with Kingbright representative for further assistance.
5. The contents and information of this document may not be reproduced or re-transmitted without permission by Kingbright.
6. All design applications should refer to Kingbright application notes available at http://www.KingbrightUSA.com/ApplicationNotes

Mouser Electronics

Authorized Distributor

Click to View Pricing, Inventory, Delivery & Lifecycle Information:

Kingbright:
APHCM2012QBC/D-F01