Cinterion® EHS6-A

AT Command Set

Version: 03.001
DocId: EHS6-A_ATC_V03.001

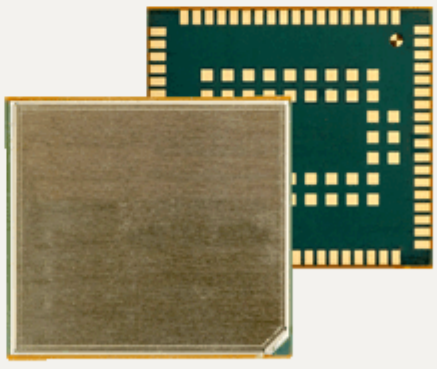

Document Name:	**Cinterion® EHS6-A AT Command Set**
Version:	**03.001**
Date:	**February 19, 2015**
DocId:	**EHS6-A_ATC_V03.001**
Status	**Confidential / Released**

GENERAL NOTE
THE USE OF THE PRODUCT INCLUDING THE SOFTWARE AND DOCUMENTATION (THE "PRODUCT") IS SUBJECT TO THE RELEASE NOTE PROVIDED TOGETHER WITH PRODUCT. IN ANY EVENT THE PROVISIONS OF THE RELEASE NOTE SHALL PREVAIL. THIS DOCUMENT CONTAINS INFORMATION ON GEMALTO M2M PRODUCTS. THE SPECIFICATIONS IN THIS DOCUMENT ARE SUBJECT TO CHANGE AT DISCRETION OF GEMALTO M2M. GEMALTO M2M GMBH GRANTS A NON-EXCLUSIVE RIGHT TO USE THE PRODUCT. THE RECIPIENT SHALL NOT TRANSFER, COPY, MODIFY, TRANSLATE, REVERSE ENGINEER, CREATE DERIVATIVE WORKS; DISASSEMBLE OR DECOMPILE THE PRODUCT OR OTHERWISE USE THE PRODUCT EXCEPT AS SPECIFICALLY AUTHORIZED. THE PRODUCT AND THIS DOCUMENT ARE PROVIDED ON AN "AS IS" BASIS ONLY AND MAY CONTAIN DEFICIENCIES OR INADEQUACIES. TO THE MAXIMUM EXTENT PERMITTED BY APPLICABLE LAW, GEMALTO M2M GMBH DISCLAIMS ALL WARRANTIES AND LIABILITIES. THE RECIPIENT UNDERTAKES FOR AN UNLIMITED PERIOD OF TIME TO OBSERVE SECRECY REGARDING ANY INFORMATION AND DATA PROVIDED TO HIM IN THE CONTEXT OF THE DELIVERY OF THE PRODUCT. THIS GENERAL NOTE SHALL BE GOVERNED AND CONSTRUED ACCORDING TO GERMAN LAW.

Copyright
Transmittal, reproduction, dissemination and/or editing of this document as well as utilization of its contents and communication thereof to others without express authorization are prohibited. Offenders will be held liable for payment of damages. All rights created by patent grant or registration of a utility model or design patent are reserved.

Copyright © 2015, Gemalto M2M GmbH, Gemalto Company

Trademark Notice
Gemalto, the Gemalto logo, are trademarks and service marks of Gemalto and are registered in certain countries.

Microsoft and Windows are either registered trademarks or trademarks of Microsoft Corporation in the United States and/or other countries. All other registered trademarks or trademarks mentioned in this document are property of their respective owners.

Contents

1. Introduction 12
1.1 Scope of the document 12
1.2 Open Source Software 13
1.3 Related documents 15
1.4 Glossary of Terms 17
1.5 Document Conventions 18
1.5.1 Quick Reference Table 18
1.5.2 Superscript notation for parameters and values 19
1.6 AT Command Syntax 20
1.6.1 Using Parameters 20
1.6.2 Concatenating AT Commands 21
1.6.3 Application Design Considerations 21
1.7 Communication between Customer Application and EHS6-A 22
1.8 Supported character sets 23
1.8.1 GSM alphabet tables and UCS2 character values 25
1.8.2 UCS2 and GSM character coding and conversion 27
1.8.2.1 Output of SIM data (ME to TE) 27
1.8.2.2 Input of SIM data (TE to ME) 28
1.9 Unsolicited Result Code Presentation 29
1.9.1 Common URCs 29
1.10 Errors and Messages 31

2. Configuration Commands 32
2.1 AT&F Reset AT Command Settings to Factory Default Values 32
2.2 AT&V Display current configuration 33
2.2.1 AT&V responses 34
2.3 AT&W Store AT Command Settings to User Defined Profile 35
2.4 ATQ Result Code Presentation Mode 36
2.5 ATV Result code format mode 37
2.5.1 Verbose and numeric result codes 37
2.6 ATX CONNECT Result Code Format 38
2.7 ATZ Restore AT Command Settings from User Defined Profile 39
2.8 AT+CFUN Functionality Level 40
2.9 AT^SMSO Switch Off EHS6-A 42
2.10 AT+CMEE Error Message Format 43
2.10.1 CME/CMS Error Code Overview 44
2.11 AT+CSCS Character Set 52
2.12 AT^SCFG Extended Configuration Settings 53
2.13 AT^SPOW Set UART Mode and SLEEP Mode on UART 80

3. Status Control Commands 82
3.1 AT+CEER Extended Error Report 82
3.1.1 Release causes for L3 Call Control (CC) 83
3.1.2 Internal failure causes 85
3.1.3 Release causes for packet switched features 87
3.1.4 SS network reject causes 88

3.1.5 SS network error causes ... 89
3.2 AT^SIND Extended Indicator Control ... 90
3.3 AT+CPAS Activity Status ... 101

4. Serial Interface Control Commands ... 102
4.1 AT\Q Flow Control ... 102
4.2 AT&C Set Data Carrier Detect (DCD) Line Mode ... 103
4.3 AT&D Set Data Terminal Ready (DTR) Line Mode ... 104
4.4 AT&S Set Data Set Ready (DSR) Line Mode ... 105
4.5 ATE AT Command Echo ... 106
4.6 AT+ICF Character Framing ... 107
4.7 AT+IPR Bit Rate ... 109
4.7.1 Autobauding ... 110
4.8 AT+CMUX Multiplex mode ... 111

5. Identification Commands ... 113
5.1 ATI Display product identification information ... 113
5.2 AT+CGMI Request manufacturer identification ... 114
5.3 AT+CGMM Request model identification ... 115
5.4 AT+CGMR Request revision identification of software status ... 116
5.5 AT+CGSN Request International Mobile Equipment Identity (IMEI) ... 117
5.6 AT+GSN Request International Mobile Equipment Identity (IMEI) ... 117
5.7 AT+CIMI Request International Mobile Subscriber Identity (IMSI) ... 118

6. Security Commands ... 119
6.1 AT+CPIN PIN Authentication ... 119
6.2 AT+CPIN2 PIN2 Authentication ... 121
6.3 AT+CLCK Facility lock ... 123
6.4 AT+CPWD Change Password ... 127

7. Call related Commands ... 130
7.1 ATA Connect to Incoming Call ... 130
7.2 ATD Mobile originated call to specified number ... 131
7.3 ATD><mem><n> Mobile originated call using specific memory and index number ... 133
7.4 ATD><n> Mobile originated call from active memory using index number ... 135
7.5 ATD><str> Mobile originated call from active memory using corresponding field ... 136
7.6 ATDL Redial last number used ... 137
7.7 ATH Disconnect existing connection ... 138
7.8 AT+CHUP Hang up call ... 139
7.9 AT^SHUP Hang up call(s) indicating a specific 3GPP TS 24.008 release cause ... 140
7.10 ATS0 Set number of rings before automatically answering a call ... 141
7.11 ATO Switch from command mode to data mode / PPP online mode ... 142
7.12 +++ Switch from data mode or PPP online mode to command mode ... 143
7.13 AT+CBST Select Bearer Service Type ... 144
7.14 AT+CSTA Select type of address ... 146
7.15 AT+CRLP Configure RLP Parameters for Outgoing Non-Transparent Data Calls ... 147
7.16 AT+CLCC List of current calls ... 148
7.17 AT^SXCALLSTAT Set Reporting Call Status ... 150
7.18 AT+CR Service reporting control ... 152
7.19 AT+CRC Incoming Call Indication Format ... 153
7.20 AT+CECALL Initiate eCall ... 155

7.21 ATS6 Set pause before blind dialing 156
7.22 ATS7 Set number of seconds to wait for connection completion 157
7.23 ATS8 Comma Dial Pause Time 158
7.24 ATS10 Set disconnect delay after indicating the absence of data carrier 159

8. Network Service Commands 160
8.1 AT+COPN Read operator names 160
8.2 AT+COPS Operator Selection 161
8.3 AT^SXRAT Selection of Radio Access Technology 164
8.4 AT^SXEONS Display EONS Names 166
8.5 AT+CREG Network Registration Status 167
8.6 AT+CSQ Signal quality 169
8.7 AT+CPOL Preferred Operator List 170
8.8 AT+CPLS Select Preferred Operator List 172
8.9 AT+CTZR Time Zone Reporting 173
8.10 AT+CTZU Automatic Time Zone Update 175
8.11 AT^SGCOPS Operator Selection for GPRS-ONLY SIM Cards 176
8.12 AT^SMONI Monitoring Serving Cell 177
8.12.1 AT^SMONI Responses 177
8.12.2 AT^SMONI Enhanced Responses 179
8.12.3 Service states 182
8.13 AT^SMONP Monitoring Neighbour Cells 183
8.13.1 AT^SMONP Responses 183
8.13.2 AT^SMONP Enhanced Responses 185
8.14 AT^SNMON Network monitoring 188

9. Supplementary Service Commands 191
9.1 AT+CACM Accumulated call meter (ACM) reset or query 191
9.2 AT+CAMM Accumulated call meter maximum (ACMmax) set or query 192
9.3 AT+CAOC Advice of Charge Information 193
9.4 AT+CCUG Closed User Group 194
9.5 AT+CCFC Call forwarding number and conditions control 196
9.6 AT+CCWA Call Waiting 199
9.7 AT+CHLD Call Hold and Multiparty 202
9.8 AT+CLIP Calling Line Identification Presentation 204
9.9 AT+CLIR Calling Line Identification Restriction 206
9.10 AT+COLP Connected Line Identification Presentation 207
9.11 AT+CNAP Calling Name Presentation 209
9.12 AT+CPUC Price per unit and currency table 211
9.13 AT+CSSN Supplementary service notifications 213
9.14 AT+CUSD Unstructured Supplementary Service Data 215

10. Internet Service Commands 217
10.1 AT^SICS Internet Connection Setup Profile 221
10.1.1 Example: GPRS connection profile 223
10.2 AT^SICI Internet Connection Information 224
10.2.1 Checking Connection Profile Status 225
10.3 AT^SIPS Internet Profile Storage 227
10.4 AT^SISS Internet Service Setup Profile 228
10.5 AT^SISI Internet Service Information 236

10.6 AT^SISO Internet Service Open 238
10.7 AT^SISC Internet Service Close 242
10.8 AT^SISR Internet Service Read Data 243
10.8.1 Example: Socket Host Reads Small Amounts of UDP Data Packets (URC Mode) 245
10.9 AT^SISW Internet Service Write Data 246
10.9.1 Usage of parameter <eodFlag> 248
10.10 AT^SIST Enter Transparent Access Mode 249
10.11 AT^SISH Internet Listener Service Disconnect 251
10.12 AT^SISX Internet Service Execution 252
10.13 AT^SISE Internet Service Error Report 254
10.14 Internet Service URC "^SIS" 255
10.14.1 Information Elements Related to the Service Application 256
10.14.2 Information Elements Related to FTP Service 258
10.14.3 Information Elements Related to HTTP Service 259
10.14.4 Information Elements Related to SMTP Service 259
10.15 Examples of how to Configure and Use Internet Service Profiles 260
10.15.1 Selecting URC Mode or Polling Mode 260
10.15.2 Configuring Socket Listener 260
10.15.3 Configuring Socket Client for Calling a Socket Listener on Another Host 261
10.15.4 Accepting / Rejecting Socket Connect Request from Remote Client 261
10.15.5 Autoanswering Socket Connect Request from Remote Client 262
10.15.6 Socket Client Sends Data via TCP Connection (Polling Mode) 263
10.15.7 Socket Client Sends Data via TCP Connection with URCs 264
10.15.8 UDP Scenario 264
10.15.9 Creating Transparent TCP Socket Client 266
10.15.10 Opening and Closing Transparent TCP Service 266
10.15.11 Transparent TCP Client Receives Data While in AT Command Mode 267
10.15.12 Server Disconnects While Transparent TCP Service is in Transparent Access Mode 268
10.15.13 Server Disconnects While Transparent TCP Service is in AT Command Mode and Data is Pending 269
10.15.14 FTP Download to FFS (URC Mode) 270
10.15.15 FTP Upload Single File (URC Mode) 271
10.15.16 HTTP Download Using TLS 272
10.15.17 HTTP Post 272
10.15.18 SMTP Sending Mail with Attachment from FFS 273
10.15.19 Ping 274

11. Packet Domain Related Commands 276
11.1 AT+CGACT PDP context activate or deactivate 276
11.2 AT+CGANS Manual response to a network request for PDP context activation 278
11.3 AT+CGATT GPRS attach or detach 280
11.4 AT+CGAUTO Automatic response to a network request for PDP context activation 281
11.5 AT+CGDATA Enter data state 283
11.5.1 Automatic deactivation of PDP context during dial-up PPP 284
11.6 AT+CGDCONT Define PDP Context 285
11.7 AT+CGCMOD PDP Context Modify 287
11.8 AT+CGEQMIN Rel. 99 Quality of Service Profile (Minimum acceptable) 288
11.9 AT+CGEQREQ Rel. 99 Quality of Service Profile (Requested) 292
11.10 AT+CGEREP GPRS event reporting 296
11.11 AT+CGPADDR Show PDP address 298

11.12 AT+CGQMIN Quality of Service Profile (Minimum acceptable) ... 299
11.13 AT+CGQREQ Quality of Service Profile (Requested) ... 302
11.14 AT+CGREG Packet Domain Network Registration Status ... 305
11.15 AT+CGSMS Select service for MO SMS messages ... 307
11.16 ATA Manual acceptance of a network request for PDP context activation ... 308
11.17 ATD*99# Request Packet Domain Service ... 309
11.18 AT^SGAUTH Set Type of Authentication for PDP-IP Connections ... 310
11.19 AT^SGCONF Configuration of GPRS related Parameters ... 312

12. Short Message Service (SMS) Commands ... 314
12.1 SMS Parameters ... 314
12.2 AT+CMGC Send SMS Command ... 318
12.3 AT+CMGD Delete short message ... 319
12.4 AT+CMGF Select SMS message format ... 320
12.5 AT+CMGL List SMS messages from preferred store ... 321
12.6 AT+CMGR Read SMS messages ... 323
12.7 AT+CMGS Send SMS ... 325
12.8 AT+CMGW Write Short Messages to Memory ... 326
12.9 AT+CMMS More Messages to Send ... 328
12.10 AT+CMSS Send short messages from storage ... 329
12.11 AT+CNMA New Message Acknowledgement to ME/TE ... 330
12.12 AT+CNMI SMS Event Reporting Configuration ... 331
12.13 AT+CPMS Preferred SMS message storage ... 334
12.14 AT+CSCA SMS Service Center Address ... 336
12.15 AT+CSCB Select Cell Broadcast Message Indication ... 337
12.16 AT+CSDH Show SMS text mode parameters ... 338
12.17 AT+CSMP Set SMS Text Mode Parameters ... 339
12.18 AT+CSMS Select Message Service ... 341
12.19 AT^SMGL List Short Messages from preferred store without setting status to REC READ ... 343
12.20 AT^SMGR Read short message without setting status to REC READ ... 344

13. USIM related Commands ... 345
13.1 AT+CCID USIM Card Identification Number ... 345
13.2 AT+CRSM Restricted SIM Access ... 346
13.3 AT+CSIM Generic USIM Access ... 348

14. USIM Application Toolkit (USAT) Commands ... 349
14.1 AT^SSTA Remote-SAT Interface Activation ... 349
14.2 AT+STKPRO USAT Proactive Command URCs ... 352
14.3 AT+STKTR USAT Terminal Response Commands ... 359
14.4 AT+STKENV USAT Envelope Command ... 365
14.5 AT+STKCC USAT Call Control Notification ... 367
14.6 AT+STKCNF USAT Proactive Session Status ... 369
14.7 Examples of how to Configure and Use the USAT ... 371

15. Phonebook Commands ... 373
15.1 AT+CNUM Read own numbers ... 373
15.2 AT+CPBR Read from Phonebook ... 374
15.3 AT+CPBS Select phonebook memory storage ... 377
15.4 AT+CPBW Write into Phonebook ... 379
15.5 AT+CPBF Find phonebook entries ... 381

15.6 AT+CSVM Set voice mail number ... 383

16. Audio Commands ... 385
16.1 ATL Set monitor speaker loudness ... 385
16.2 AT+CMUT Mute control ... 386
16.3 AT+VTD Tone duration ... 387
16.4 AT+VTS DTMF and tone generation ... 388
16.5 AT^SAIC Audio Interface Configuration ... 390
16.6 AT^SNFI Set microphone path parameters ... 391
16.7 AT^SNFM Set microphone audio path and power supply ... 393
16.8 AT^SNFO Set audio output (= loudspeaker path) parameter ... 394
16.9 AT^SNFS Select audio hardware set ... 396
16.10 AT^SNFTTY Signal TTY/CTM Audio Mode Capability ... 398
16.11 AT^SRTC Ring tone configuration ... 399
16.12 AT^SAFH Audio File Handling ... 401

17. Java related Commands ... 404
17.1 AT^SJAM Manage Java Application ... 404
17.2 AT^SJDL Java Download ... 407
17.3 AT^SJMSEC Java Midlet Security ... 409
17.4 AT^SJNET Set Dialup Network Access Parameters ... 412
17.5 AT^SJOTAP Over The Air Application Provisioning ... 414
17.6 AT^SJRA Run Java Application ... 417

18. Miscellaneous Commands ... 418
18.1 A/ Repeat Previous Command Line ... 418
18.2 ATS3 Command Line Termination ... 419
18.3 ATS4 Response Formatting ... 420
18.4 ATS5 Command Line Editing ... 421
18.5 AT^SFDL Firmware Download ... 422
18.6 AT^SFSA Flash File System Access ... 423

19. Hardware related Commands ... 432
19.1 AT+CCLK Real Time Clock ... 432
19.2 AT+CALA Alarm Configuration ... 433
19.3 AT^SBV Battery/Supply Voltage ... 436
19.4 AT^SCTM Critical Operating Temperature Monitoring ... 437
19.5 AT^SLED LED Feature ... 439
19.6 AT^SRADC Configure and Read ADC Measurement ... 441
19.7 AT^SSPI Serial Protocol Interface ... 444
19.7.1 Selecting SPI Mode ... 446
19.7.2 Transmitting Data over AT Interface ... 447
19.7.2.1 Structure of Messages on the I²C Bus ... 448
19.7.2.2 Structure of Messages on the SPI ... 449
19.7.3 Error Handling on the I²C Bus ... 449
19.7.4 Example: Using I²C Bus ... 451
19.7.5 Example: Transfer and Response Messages on SPI ... 452
19.8 AT^SWDAC PWM Signal Configuration for DAC ... 453

20. General Purpose I/O (GPIO) Pin related Commands ... 455
20.1 AT^SCPIN Pin Configuration ... 455

20.1.1 GPIO Configuration Table 456
20.2 AT^SGIO Get IO state of a specified pin or port 458
20.3 AT^SSIO Set IO state of a specified pin or port 459
20.4 AT^SCPOL Polling Configuration 460
20.5 AT^SSCNT Start and Stop Pulse Counter 461
20.5.1 Using the Pulse Counter in Start-Stop Counter Mode 462
20.6 AT^SCCNT Configure Pulse Counter 463
20.6.1 Using the Pulse Counter in Limit Counter Mode 464
20.7 AT^SPIO GPIO Driver Open/Close 465

21. Appendix 466
21.1 Restricted access to SIM data after SIM PIN authentication 466
21.2 Star-Hash (*#) Network Commands 467
21.3 Available AT Commands and Dependency on SIM PIN 470
21.4 Availability of AT Commands Depending on Operating Mode of ME 476
21.5 AT Command Settings storable with AT&W 482
21.6 Factory Default Settings Restorable with AT&F 484
21.7 Summary of Unsolicited Result Codes (URC) 486
21.8 Alphabetical List of AT Commands 490

List of Tables

Table 1.1: Symbols used to mark the type of parameters 19
Table 1.2: Symbols used to indicate storage options or correlations with other commands 19
Table 1.3: Symbols used to mark different types of default values of parameters 19
Table 1.4: Types of AT commands and responses 20
Table 1.5: Exemplary escape sequences generated by EHS6-A for its non-UCS2 output 24
Table 2.1: General "CME ERROR" Codes (3GPP TS 27.007) 44
Table 2.2: General "CME ERROR" Codes (proprietary) 45
Table 2.3: GPRS related "CME ERROR" Codes (3GPP TS 27.007) 45
Table 2.4: SMS related "CMS ERROR" Codes (3GPP TS 27.005) 47
Table 10.1: Applicability of AT^SICS <conParmTag> values 221
Table 10.2: Applicability of AT^SISS <srvParmTag> values 228
Table 19.1: EHS6-A Status and Mode Indication via LED 439
Table 19.2: Special characters for ASCII coding 447
Table 19.3: Structure of Transfer and Response Messages on the I²C bus 448
Table 19.4: Structure of Transfer and Response Messages for SPI 449
Table 21.1: Star-Hash (*#) Command Overview 467
Table 21.2: Abbreviations of Codes and Parameters used in Table 21.1 468
Table 21.3: Star-Hash Command Response Parameters 468
Table 21.4: Star-Hash Commands for Supplementary Services 469
Table 21.5: Available AT Commands and Dependency on SIM PIN 470
Table 21.6: Availability of AT Commands Depending on Operating Mode of ME 476
Table 21.7: Settings Stored to User Profile 482
Table 21.8: Factory Default Settings Restorable with AT&F 484
Table 21.9: Summary of Unsolicited Result Codes (URC) 486
Table 21.10: Alphabetical List of AT Commands 490

List of Figures

Figure 1.1: Main character table of GSM 7 bit default alphabet 25
Figure 1.2: Extension character table of GSM 7 bit default alphabet 26
Figure 19.1: SPI modes selectable on SPI 446

1. Introduction

1.1 Scope of the document

This document presents the AT Command Set for
EHS6-A GSM/UMTS Mobile Engine, Release 03.001.

Before using the EHS6-A or upgrading to a new firmware version please read the latest product information provided in "EHS6-A Release Notes, Version 03.001".

More information is available at http://m2m.gemalto.com/.

DISCLAIMER:
AT commands or parameters not documented in this document are subject to change and reserved for future use. Gemalto M2M GmbH reserves the right to modify or even eliminate these options in later releases.

1.2 Open Source Software

The following Open Source Software shall be provided by or on behalf of Licensor and subject to the license conditions specified below.

SW Package / Function	Name / Description	Code Format	Comment
Lightweight TCP/IP stack	Lightweight open source IP (unmodified open source), BSD licensing	Source	Note 1
PPP	Point-to-Point-Protocol software integrated in the protocol stack based on the Lightweight open source IP stack	Source	Note 1
TCP/IP/UDP	TCP/IP/UDP by IFX modified software, compatible with the protocol stack based on the Lightweight open source IP stack	Source	Note 1
TLS/IP/UDP	Transport Security Layer	Source	Note 2
RFC1144	Compressor for TCP/IP Headers for Low-Speed Serial Links integrated in the GAS of the protocol stack (modified but based on open source, used in SNDCP)	Object Code	Note 3

NOTE 1:
The License of the above mentioned Lightweight IP is free of charge.
Licensee is responsible for adhering to the license conditions of the above mentioned third party software:

Copyright (C) 2001, Swedish Institute of Computer Science. All rights reserved

Redistribution and use in source and binary forms, with or without modification, are permitted provided that the following conditions are met:

1. Redistribution of source code must retain the above copyright notice, this list of conditions and the following disclaimer.
2. Redistribution in binary form must reproduce the above copyright notice, this list of conditions and the following disclaimer in the documentation and/or other materials provided with the distribution
3. Neither the name of the Institute nor names of its contributors may be used to endorse or promote products derived from this software without specific prior written permission.

THIS SOFTWARE IS PROVIDED BY THE INSTITUTE AND CONTRIBUTORS "AS IS" AND ANY EXPRESS OR IMPLIED WARRANTIES, INCLUDING, BUT NOT LIMITED TO, THE IMPLIED WARRENTIES OF MERCHANTABILITY AND FITNESS FOR A PARTICULAR PURPOSE ARE DISCLAIMED. IN NO EVENT SHALL THE INSTITUE OR CONTRIBUTORS BE LIABLE FOR ANY DIRECT, INDIRECT, INCIDENTAL, SPECIAL, EXEMPLARY, OR CONSEQUENTIAL DAMAGES (INCLUDING, BUT NOT LIMITED TO, PROCUREMENT OF SUBSTITUTE GOODS OR SERVICES; LOSS OF USE, DATA, OR PROFITS; OR BUSINESS INTERRUPTION) HOWEVER CAUSED AND ANY THEORY OF LIABILITY, WETHER IN CONTRACT, STRICT LIABILITY, OR TORT (INCLUDING NEGLIGENCE OR OTHERWISE) ARISING IN ANY WAY OUT OF THE USE OF THIS SOFTWARE, EVEN IF ADVISED OF THE POSSIBILITY OF SUCH DAMAGE.

NOTE 2:
Copyright © 1995-1998 Eric Young (eay@cryptsoft.com). All rights reserved.

This package is an SSL implementation written by Eric Young (eay@cryptsoft.com).
The implementation was written so as to conform to Netscape SSL.
This library is free for commercial and non-commercial use as long as the following conditions are adhered to. The following conditions apply to all code found in this distribution, be it the RC4, RSA, lhash, DES, etc., code; not just the SSL code. The SSL documentation included with this distribution is covered by the same copyright terms except that the holder is TIM Hudson (tjh@cryptsoft.com)
Copyright remains Eric Young's, and as such any Copyright notices in the code are not to be removed. If this package is used in a product, Eric Young should be given attribution as the author of the parts of the library used. This can be in the form of a textual message at program startup or in documentation (online or textual) provided

with the package. Redistribution and use in source and binary forms, with or without modification, are permitted provided that the following conditions are met:

1. Redistribution of source code must retain the copyright notice, this list of conditions and the following disclaimer.
2. Redistribution in binary form must reproduce the copyright notice, this list of conditions and the following disclaimer in the documentation and or other materials provided with the distribution.
3. All advertising materials mentioning features or use of this software must display the following acknowledgement:
   "This product includes cryptographic software written by Eric Young (eay@cryptsoft.com)".
   The word 'cryptographic' can be left out if the routines from the library being used are not cryptographic related.
4. If you include Windows specific code (or a derivative thereof) from the apps directory (application code) you must include an acknowledgement:
   "This product includes software written by Tim Hudson (tjh@cryptsoft.com)."

THIS SOFTWARE IS PROVIDED BY ERIC YOUND "AS IS" AND ANY EXPRESS OR IMPLIED WARRANTIES, INCLUDING, BUT NOT LIMITED TO; THE IMPLIED WARRANTIES OF MERCHANTABILITY AND FITNES FOR PARTICULAR PURPOSE ARE DISCLAIMED. ON NO EVENT SHALL THE AUTHOR OR CONTRIBUTORS BE LIABLE FOR ANY DIRECT, INDIRECT, INCIDENTAL, SPECIAL, EXEMPLARY, OR CONSEQUENTIAL DAMAGES (INCLUDING, BUT NOT LIMITED TO, PROCUREMENT OF SUBSTITUTE GOODS OR SERVICES; LOSS OF USE, DATA, OR PROFITS; OR BUSINESSINTERRUPTION) HOWEVER CAUSED AND ON ANY THEORY OF LIABILITY, WETHER IN CONTRACT, STRICT LIABILITY, OR TORT (INCLUDING NEGKIGENCE OR OTHERWISE) ARISING IN ANY WAY OUT OF THE USE OF THIS SOFTWARE, EVEN IF ADVISED OF THE POSSIBILITY OF SUCH DAMAGE. The License and distribution terms for any publically available version or derivative of this code cannot be changed, i.e., this code cannot simply be copied and put under another distribution licence [including the GNU Public Licence.]

NOTE 3:
Copyright © 1989 Regents of the University of California.

Redistribution and use in source and binary forms are permitted provided that the above copyright and this paragraph are duplicated in all such forms and that any documentation, advertising materials, and other materials related to such distribution and use acknowledge that the software was developed by the University of California, Berkeley. The name of the University may not be used to endorse or promote products derived from this software without specific prior written permission.

THIS SOWFTWARE IS PROVIDED "AS IS" AND WITHOUT ANY EXPRESS OR IMPLIED WARRANTIES, INCLUDING, WITHOUT LIMITATION, THE IMPLIED WARRANTIES OF MERCHANTIBILITY AND FITNESS FOR A PARTICULAR PRUPOSE.

1.3 Related documents

[1] EHS6-A Release Notes, Version 03.001
[2] EHS6-A Hardware Interface Description, Version 03.001
[3] Java User's Guide
[4] Multiplexer User's Guide
[5] 3GPP TS 27.010 (descendant of 3GPP TS 07.10): Terminal Equipment to User Equipment (TE-UE) multiplexer protocol
[6] Multiplex Driver Developer's Guide
[7] Multiplex Driver Installation Guide
[8] Application Note 02: Audio Interface Design
[9] Application Note 16: Updating EHS6-A Firmware
[10] Application Note 22: Using TTY / CTM equipment with EHS6-A
[11] 3GPP TR 21.905 (descendant of 3GPP TR 01.04): Vocabulary for 3GPP Specifications
[12] International Organization for Standardization (ISO): ISO/IEC10646: Universal Multiple-Octet Coded Character Set (UCS) - Part 1: Architecture and Basic Multilingual Plane.
This international standard is closely related to the Unicode Standard published by the Unicode Consortium
[13] The Unicode Consortium: Mapping of ETSI GSM 03.38 7-bit default alphabet characters into Unicode [.TXT!]
[14] ITU-T V.24 List of definitions for interchange circuits between data terminal equipment (DTE) and data circuit-terminating equipment (DCE)
[15] ITU-T V.250 Serial asynchronous automatic dialling and control
[16] 3GPP TS 11.11: Specification of the Subscriber Identity Module - Mobile Equipment (SIM - ME) interface
[17] 3GPP TS 31.101: UICC-terminal interface; Physical and logical characteristics
[18] 3GPP TS 31.102: UICC-terminal interface; Physical and logical characteristics
[19] ETSI TS 102 221: Smart Cards; UICC-Terminal interface; Physical and logical characteristics
[20] 3GPP TS 11.14: Specification of the SIM Application Toolkit for the Subscriber Identity Module - Mobile Equipment (SIM - ME) interface
[21] 3GPP TS 31.111: Universal Subscriber Identity Module (USIM) Application Toolkit (USAT)
[22] ETSI TS 102 223: Smart Cards; Card Application Toolkit (CAT)
[23] 3GPP TS 22.002 (descendant of 3GPP TS 22.02): Circuit Bearer Services (BS) supported by a Public Land Mobile Network (PLMN)
[24] 3GPP TS 22.004 (descendant of 3GPP TS 02.04): General on supplementary services
[25] 3GPP TS 22.030 (descendant of 3GPP TS 02.30): Man-Machine Interface (MMI) of the Mobile Station (MS)
[26] 3GPP TS 22.060 (descendant of 3GPP TS 02.60): General Packet Radio Service (GPRS); Service description; Stage 1
[27] 3GPP TS 23.060 (descendant of 3GPP TS 03.60): General Packet Radio Service (GPRS); Service description; Stage 2
[28] 3GPP TS 22.081 (descendant of 3GPP TS 02.81): Line Identification Supplementary Services; Stage 1
[29] 3GPP TS 22.082 (descendant of 3GPP TS 02.82): Call Forwarding (CF) Supplementary Services; Stage 1
[30] 3GPP TS 22.083 (descendant of 3GPP TS 02.83): Call Waiting (CW) and Call Holding (HOLD); Supplementary Services; Stage 1
[31] 3GPP TS 22.085 (descendant of 3GPP TS 02.85): Closed User Group (CUG) supplementary services; Stage 1
[32] 3GPP TS 22.088 (descendant of 3GPP TS 02.88): Call Barring (CB) supplementary services; Stage 1
[33] 3GPP TS 22.090 (descendant of 3GPP TS 02.90): Unstructured Supplementary Service Data (USSD); Stage 1
[34] 3GPP TS 23.038 (descendant of 3GPP TS 03.38): Alphabets and language specific information
[35] 3GPP TS 23.040 (descendant of 3GPP TS 03.40): Technical realization of the Short Message Service

(SMS)

[36] 3GPP TS 23.041 (descendant of 3GPP TS 03.41): Technical realization of Cell Broadcast Service (CBS)

[37] 3GPP TS 23.107: Quality of Service (QoS) concept and architecture

[38] 3GPP TS 24.011 (descendant of 3GPP TS 04.11): Point-to-Point (PP) Short Message Service (SMS) support on mobile radio interface

[39] 3GPP TS 24.008 (descendant of 3GPP TS 04.08): Mobile radio interface Layer 3 specification; Core network protocols; Stage 3

[40] 3GPP TS 24.080 (descendant of 3GPP TS 04.80): Mobile radio interface layer 3 supplementary services specification; Formats and coding

[41] 3GPP TS 25.331 Radio Resource Control (RRC)

[42] 3GPP TS 27.071: Mandatory speech CODEC speech processing functions; AMR speech Codec; General description

[43] 3GPP TS 27.005 (descendant of 3GPP TS 07.05): Use of Data Terminal Equipment - Data Circuit terminating Equipment (DTE - DCE) interface for Short Message Service (SMS) and Cell Broadcast Service (CBS)

[44] 3GPP TS 27.007 (descendant of 3GPP TS 07.07): AT command set for User Equipment (UE)

[45] 3GPP TS 27.060 (descendant of 3GPP TS 07.60): Mobile Station (MS) supporting Packet Switched Services

[46] 3GPP TS 22.101 (descendant of 3GPP TS 02.07 and 3GPP TS 02.40): Service principles

[47] Common PCN Handset Specification (CPHS) v4.2 [.ZIP!]

[48] 3GPP TS 45.008 (descendant of GSM 05.08): Radio subsystem link control

[49] USB Language Identifiers (LANGIDs) [.PDF!].

1.4 Glossary of Terms

Acronym	Definition
GSM	Global System for Mobile Communications ...
PLMN	Public Land Mobile Network ...
UMTS	Universal Mobile Telecommunications System ...

1.5 Document Conventions

Throughout this document EHS6-A is also referred to as GSM/UMTS Mobile Engine or short ME, MS (Mobile Station) or Mobile Terminal (MT). In related documents the equivalent terms DCE (Data Communication Equipment), facsimile DCE or FAX modem may be found.
AT commands are used to control the EHS6-A. The controlling device is referred to as Customer Application or short TE. Related documents may use the equivalent term DTE (Data Terminal Equipment).
All abbreviations and acronyms used throughout this document are based on GSM or 3GPP specifications. For definitions please refer to 3GPP TR 21.905 [11].

1.5.1 Quick Reference Table

Each AT command description includes a table similar to the example shown below. The table is intended as a quick reference to indicate the following functions:

PIN: Is the AT command PIN protected?
- **+** Yes
- **-** No
- **±** Usage is dependent on conditions specified for the command, or not all command types are PIN protected (for example write command PIN protected, read command not).

Note: The table provided in Section 21.3, `Available AT Commands and Dependency on SIM PIN` uses the same symbols.

✈ Is the AT command supported in AIRPLANE mode?
- **+** Yes
- **-** No
- **±** In AIRPLANE mode, not all described functions are available. For example, the test or read command is usable, the write or execute command is not. Furthermore, only some of the listed parameters can be changed in AIRPLANE mode. A typical example is `AT^SCFG` that controls different features.

Last: If commands are concatenated, this AT command must be the last one.
- **+** Yes
- **-** No

Note: See also Section 1.6, AT Command Syntax for details on concatenated AT commands.

Example:

PIN	✈	Last
-	-	-

1.5.2 Superscript notation for parameters and values

Table 1.1: Symbols used to mark the type of parameters

Parameter type	Meaning
<param>(num)	Parameter value must be numeric type.
<param>(str)	Parameter value must be string type.
<param>(text)	Parameter value is a string according to selected character set. Not enclosed in double quotes
<param>(u)	Unspecified, i.e. parameter value may be numeric or string type.

Table 1.2: Symbols used to indicate storage options or correlations with other commands

Parameter option	Meaning
<param>(+CSCS)	Parameter value has to be (is) coded according to current setting of <chset> (see AT+CSCS for details)
<param>(&W)	Parameter value is stored to user profile in non-volatile memory after executing AT&W
<param>(NV)	Parameter is stored in non-volatile memory.

Table 1.3: Symbols used to mark different types of default values of parameters

Value option	Meaning
[x]	Default value set if parameter is omitted.
x(&F)	Factory value restored by AT&F
x(P)	Powerup value of a parameter not stored in non-volatile memory.
x(D)	Delivery value of a parameter which may be overridden from non-volatile setting (refer to symbol (NV) and symbol (&W) above).

1.6 AT Command Syntax

The "AT" or "at" prefix must be set at the beginning of each command line. To terminate a command line enter <CR>. Commands are usually followed by a response that includes "<CR><LF><response><CR><LF>". Throughout this document, only the responses are presented, <CR><LF> are omitted intentionally.

Table 1.4: Types of AT commands and responses

AT command type	Syntax	Function
Test command	AT+CXXX=?	The mobile equipment returns the list of parameters and value ranges set with the corresponding Write command or by internal processes.
Read command	AT+CXXX?	This command returns the currently set value of the parameter or parameters.
Write command	AT+CXXX=<...>	This command sets user-definable parameter values.
Exec(ution) command	AT+CXXX	The execution command reads non-variable parameters determined by internal processes in the ME.

1.6.1 Using Parameters

- Multiple parameters are separated by commas. This applies to write commands, command responses, URCs and result codes. Please note that throughout this document spaces behind commas may be added for better readability.
- Optional parameters are enclosed in square brackets. If optional parameters are omitted, the current settings are used until you change them.
- Optional parameters or subparameters can be omitted unless they are followed by other parameters. If you want to omit a parameter in the middle of a string it must be replaced by a comma. See also example 1.
- A parameter value enclosed in square brackets represents the value that will be used if an optional parameter is omitted.
- When the parameter is a character string, e.g. <text> or <number>, the string must be enclosed in quotation marks, e.g. "Charlie Brown" or "+49030xxxx". Symbols in quotation marks will be recognized as strings.
- All spaces will be ignored when using strings without quotation marks.
- It is possible to omit the leading zeros of strings which represent numbers.
- If an optional parameter of a ITU-T V.250 command is omitted, its value is assumed to be 0.

Example 1: Omitting parameters in the middle of a string

```
AT+CCUG?                    Query current setting
+CCUG: 1,10,1
OK
AT+CCUG=,9                  Set only the middle parameter
OK
AT+CCUG?                    Query new setting
+CCUG: 1,9,1
OK
```

Example 2: Using default parameter values for optional parameters

```
AT+CREG=                    Setting default values for AT+CREG.
OK
AT+CREG?                    Query settings.
+CREG: 0,0                  AT+CREG default values are set.
OK
```

1.6.2 Concatenating AT Commands

Concatenating AT commands on the same line is possible, though not recommended because of restrictions listed below (for more details see ITU-T V.250 [15]).
When concatenating AT commands you need to enter the "AT" or "at" prefix only once at the beginning of a command line. Basic commands (i.e., ITU-T V.250 commands) are concatenated without delimiter. Extended commands (i.e., commands starting with AT+ or AT^) use a semicolon as delimiter.

Disadvantages and restrictions:

- There is no way to control the minimum time to wait between finishing an AT command and sending the next one. Please refer to Section 1.7, Communication between Customer Application and EHS6-A for details about timing.
- The sequence of processing the AT commands may be different from the sequential order of command input.
- Many AT commands cannot be concatenated (see list below). Concatenating these commands might end up with an error result code, or leads to an unexpected order of responses.

AT command type	Comment
3GPP TS 27.007 commands	Cannot be concatenated with extended commands (prefix AT^S)
3GPP TS 27.005 commands (SMS)	To be used standalone
Commands starting with AT&	To be used standalone
AT+IPR	To be used standalone

1.6.3 Application Design Considerations

When designing your application keep in mind that parameters given in AT command responses, result codes and unsolicited result codes are only separated by commas with no spaces in between. Please take care that your application ignores any additional spaces that may, nevertheless, be inserted in some AT command responses, result codes and unsolicited result codes provided by EHS6-A.

1.7 Communication between Customer Application and EHS6-A

After power-up or restart ensure that the ME is in ready state before trying to send any AT command or data. For detailed information on timing conditions, signal states and particularly the startup behavior of the EHS6-A's signal lines refer to the Hardware Interface Description [2].

Leaving hardware flow control unconsidered the Customer Application (TE) is coupled with the EHS6-A (ME) via a receive and a transmit line.
Since both lines are driven by independent devices collisions may (and will) happen. For example, if the TE issues an AT command and the EHS6-A starts sending a URC. This will probably cause the TE to misinterpret the URC being part of the AT command's response. To avoid this conflict the following measures must be taken:

- If an AT command is finished (with "OK" or "ERROR") the TE shall always wait at least 100 ms before sending the next one. This applies to bit rates of 9600 bps or higher (see AT+IPR). At bit rates below 9600 bps the delay must be longer: 300 ms at 1200 bps, and 500 ms at 300 bps.
  The pause between two AT commands gives the EHS6-A the opportunity to the transmission of pending URCs and get necessary service.
- The TE shall communicate with the EHS6-A using activated echo (ATE1), i.e. the EHS6-A echoes characters received from the TE.
  Hence, when the TE receives the echo of the first character "A" of the AT command just sent by itself it has control both over the receive and the transmit paths.

Using Backspace at command line:

- As the standard GSM alphabet does not provide a backspace functionality the EHS6-A is designed to use the character "08" (hex 0x08) as backspace for command line input. This allows the user to easily erase the last character when writing an AT command. On the other hand, this solution requires entering the escape sequence \08 for writing the "ò" character in GSM character string parameters.
- If command echo is enabled (ATE1) Backspace may cause 08 - 32 - 08 (decimal) character sequence or no echo, depending on serial interface and speed of character input.

1.8 Supported character sets

EHS6-A supports two character sets: *GSM 7 bit*, also referred to as GSM alphabet or SMS alphabet (3GPP TS 23.038 [34]) and *UCS216 bit* (ISO-10646 [12]). See AT+CSCS for information about selecting the character set. Character tables can be found below.

Explanation of terms

- Escape Character
  There are two types of escape sequences which lead to an alternative interpretation on subsequent characters by the ME:
  - AT command interface
    Escape sequences starting with character value 0x5C are used for the ME's non-UCS2 input and output.
  - GSM 7 bit default alphabet
    The escape sequence used within a text coded in the GSM 7 bit default alphabet is starting with character value 0x1B and needs to be correctly interpreted by the TE, both for character input and output. To the EHS6-A, an escape sequence appears like any other byte received or sent.

  For SMS user data input after the prompt '>' in text mode (AT+CMGF)=1 and AT+CSCS="GSM" the character 0x1A is interpreted as 'CTRL-Z'. The character 0x1B (interpreted as 'ESC') as well as the escape character 0x5C (is interpreted as 'Ö'), therefore both escape mechanisms are not supported in this case.
- TE Character Set
  The character set currently used by the Customer Application is selected with AT+CSCS. It is recommended to select UCS2 setting.
- Data Coding Scheme (DCS)
  DCS is part of a short message and is saved on the SIM. When writing a short message to the SIM in text mode, the DCS stored with AT+CSMP is used and determines the coded character set.
- International Reference Alphabet (IRA)
  The International Reference Alphabet is equivalent to ASCII (American Standard Code for Information Interchange) and ISO 646, i.e. it defines a 7-bit coded character set. The mapping can be obtained from the character set tables below (UCS2 values 0x0000 to 0x007F).

When you enter characters that are not valid characters of the supported alphabets the behavior is undefined.
If GSM alphabet is selected, all characters sent over the serial line (between TE and ME) must be in the range from 0 to 127 (7 bit range).
Note: If the ME is configured for GSM alphabet, but the Customer Application (TE) uses ASCII, bear in mind that some characters have different code values, such as the following:

- "@" character with GSM alphabet value 0 is not displayable by an ASCII terminal program, e.g. Microsoft© Hyperterminal®.
- "@" character with GSM alphabet value 0 will terminate any C string! This is because value 0 is defined as C string end tag. Therefore, the GSM Null character will cause problems on application level when using 'C'-functions, e.g. "strlen()". Using an escape sequence as shown in the table below solves the problem. By the way, this may be the reason why even network providers sometimes replace '@' with "@=*" in their SIM application.
- Some other characters of the GSM alphabet may be misinterpreted by an ASCII terminal program. For example, GSM "ö" (as in "Börse") is assumed to be "|" in ASCII, thus resulting in "B|rse". This is because in both alphabets there are different characters assigned to value 7C (hexadecimal).

If the TE sends characters differently coded or undefined in ASCII or GSM (e.g. Ä, Ö, Ü) it is possible to use escape sequences. The ME's input parser translates the escape sequence to the corresponding GSM character value.

Note:
The ME also uses escape sequences for its non-UCS2 output: Quotation mark (") and the escape character itself (\, respectively Ö in GSM alphabet) are converted, as well as all characters with a value below 32 (hexadecimal 0x20).
Hence, the input parser of the Customer Application needs to be able to translate escape sequences back to the corresponding character of the currently used alphabet.
Unsupported characters are shown as a space (hexadecimal 0x20).

Table 1.5: Exemplary escape sequences generated by EHS6-A for its non-UCS2 output

Character Value	ASCII Character	GSM Character	UCS2 Character	Escape Sequence	Numeric Escape Sequence
0x5C	\	Ö	00D6	\5C	0x5C 0x35 0x43
0x22	"	"	0022	\22	0x5C 0x32 0x32
0x00	NULL	@	n/a	\00	0x5C 0x30 0x30

Usually terminal programs are not able to recognize escape sequences, and thus, handle them as normal characters.
To prevent misinterpretation of control characters or special characters it is recommended to always use USC2 alphabet and PDU mode.

1.8.1 GSM alphabet tables and UCS2 character values

This section provides tables for the GSM default alphabet (3GPP TS 23.038 [34]) supported by the EHS6-A. Below any GSM character find the corresponding two byte character value of the UCS2 alphabet. For details refer to "ETSI GSM 03.38 mapping into Unicode" [13].

Main character table of GSM 7 bit default alphabet				b7	0	0	0	0	1	1	1	1
				b6	0	0	1	1	0	0	1	1
				b5	0	1	0	1	0	1	0	1
b4	b3	b2	b1		0	1	2	3	4	5	6	7
0	0	0	0	0	@ 0040	Δ 0394	SP 0020	0 0030	¡ 00A1	P 0050	¿ 00BF	p 0070
0	0	0	1	1	£ 00A3	_ 005F	! 0021	1 0031	A 0041	Q 0051	a 0061	q 0071
0	0	1	0	2	$ 0024	Φ 03A6	" 0022	2 0032	B 0042	R 0052	b 0062	r 0072
0	0	1	1	3	¥ 00A5	Γ 0393	# 0023	3 0033	C 0043	S 0053	c 0063	s 0073
0	1	0	0	4	è 00E8	Λ 039B	¤ 00A4	4 0034	D 0044	T 0054	d 0064	t 0074
0	1	0	1	5	é 00E9	Ω 03A9	% 0025	5 0035	E 0045	U 0055	e 0065	u 0075
0	1	1	0	6	ù 00F9	Π 03A0	& 0026	6 0036	F 0046	V 0056	f 0066	v 0076
0	1	1	1	7	ì 00EC	Ψ 03A8	' 0027	7 0037	G 0047	W 0057	g 0067	w 0077
1	0	0	0	8	ò 00F2 [3]	Σ 03A3	(0028	8 0038	H 0048	X 0058	h 0068	x 0078
1	0	0	1	9	Ç 00E7	Θ 0398	) 0029	9 0039	I 0049	Y 0059	i 0069	y 0079
1	0	1	0	10/A	LF [LF] [2]	Ξ 039E	* 002A	: 003A	J 004A	Z 005A	j 006A	z 007A
1	0	1	1	11/B	Ø 00D8	[1]	+ 002B	; 003B	K 004B	Ä 00C4	k 006B	ä 00E4
1	1	0	0	12/C	ø 00F8	Æ 00C6	, 002C	< 003C	L 004C	Ö 00D6	l 006C	ö 00F6
1	1	0	1	13/D	CR [CR] [2]	æ 00E6	- 002D	= 003D	M 004D	Ñ 00D1	m 006D	ñ 00F1
1	1	1	0	14/E	Å 00C5	ß 00DF	. 002E	> 003E	N 004E	Ü 00DC	n 006E	ü 00FC
1	1	1	1	15/F	å 00E5	É 00C9	/ 002F	? 003F	O 004F	§ 00A7	o 006F	à 00E0

Figure 1.1: Main character table of GSM 7 bit default alphabet

1) This code is an escape to the following extension of the 7 bit default alphabet table.
2) This code is not a printable character and therefore not defined for the UCS2 alphabet. It shall be treated as the accompanying control character.
3) See Section 1.7 for further details on using backspace and "ò" character.

Extension character table of GSM 7 bit default alphabet				b7	0	0	0	0	1	1	1	1
				b6	0	0	1	1	0	0	1	1
				b5	0	1	0	1	0	1	0	1
b4	b3	b2	b1		0	1	2	3	4	5	6	7
0	0	0	0	0					| 007C			
0	0	0	1	1								
0	0	1	0	2								
0	0	1	1	3								
0	1	0	0	4		^ 005E						
0	1	0	1	5							€ [2] 20AC	
0	1	1	0	6								
0	1	1	1	7								
1	0	0	0	8			{ 007B					
1	0	0	1	9			} 007D					
1	0	1	0	10 /A	[3] [LF]							
1	0	1	1	11 /B		[1]						
1	1	0	0	12 /C				[005B				
1	1	0	1	13 /D				~ 007E				
1	1	1	0	14 /E				] 005D				
1	1	1	1	15 /F			\ 005C					

Figure 1.2: Extension character table of GSM 7 bit default alphabet

1) This code value is reserved for the extension to another extension table. On receipt of this code, a receiving entity shall display a space until another extension table is defined.
2) This code represents the EURO currency symbol. The code value is the one used for the character 'e'. Therefore a receiving entity which is incapable of displaying the EURO currency symbol will display the character 'e' instead.
3) This code is defined as a Page Break character and may be used for example in compressed CBS messages. Any mobile which does not understand the 7 bit default alphabet table extension mechanism will treat this character as Line Feed.

If the Customer Application receives a code where a symbol is not represented in Figure 1.2, Extension character table of GSM 7 bit default alphabet it shall display the character shown in the main GSM 7 bit default alphabet table (see Figure 1.1, Main character table of GSM 7 bit default alphabet).

1.8.2 UCS2 and GSM character coding and conversion

This section provides basic information on how to handle input and output character conversion, e.g. for SMS text mode, if the character representation of ME and Customer Application differ, i.e. if the Data Coding Scheme and the TE character set use different mappings.

1.8.2.1 Output of SIM data (ME to TE)

Used character set	DCS = 7 bit GSM	DCS = 8 bit Data	DCS = 16 bit UCS2
GSM	Case 1 GSM (1:1)	Case 2 8 bit to IRA (1:2)	Case 3 UCS2 to IRA (2:4)
UCS2	Case 4 GSM to IRA (1:4)	Case 5 8 bit to IRA (1:4)	Case 6 UCS2 to IRA (2:4)

Note: The ratio of SIM bytes to output bytes is given in parentheses.

Case 1
Every GSM character is sent to the TE as it is (8-bit value with highest bit set to zero).
Example: 47'H, 53'H, 4D'H → 47'H, 53'H, 4D'H, displayed as "GSM"

Case 2
Every data byte is sent to the TE as 2 IRA characters each representing a halfbyte.
Example: B8'H (184 decimal) → 42'H, 38'H, displayed as "B8"

Case 3
Every 16-bit UCS2 value is sent to the TE as 4 IRA characters.
Example: C4xA7'H (50343 decimal) → 43'H, 34'H, 41'H, 37'H, displayed as "C4A7"
Problem: An odd number of bytes leads to an error because there are always two bytes needed for each USC2 character

Case 4
Every GSM character is sent to the TE as 4 IRA characters to show UCS2 in text mode.
Example: 41'H ("A") → 30'H, 30'H, 34'H, 31'H, displayed as "0041"

Case 5
Every data byte is sent to the TE as IRA representation of UCS2 (similar to case 4).
Example: B2'H → 30'H, 30'H, 42'H, 32'H, displayed as "00B2"

Case 6
Every 16-bit value is sent to the TE as IRA representation of it. It is assumed that number of bytes is even.
Example: C3x46'H → 43'H, 33'H, 34'H, 36'H, displayed as "C346"

1.8.2.2 Input of SIM data (TE to ME)

Used character set	DCS = 7 bit GSM	DCS = 8 bit Data	DCS = 16 bit UCS2
GSM	Case 1 GSM (1:1)	Case 2 IRA to 8 bit (2:1)	Case 3 IRA to 16 bit (4:2)
UCS2	Case 4 UCS2 to GSM (4:1)	Case 5 UCS2 to 8 bit (4:1)	Case 6 UCS2 to 16 bit (4:2)

Note: The ratio between the number of input characters and bytes stored on the SIM is given in parentheses.

Case 1
Every character is sent from TE to ME as GSM character (or ASCII with standard terminal emulation, e.g. Hyperterminal®).
Character value must be in range from 0 to 127 because of 7-bit GSM alphabet.
To reach maximum SMS text length of 160 characters in 140 bytes space characters will be compressed on SIM. This must be set using the parameter <dcs> of AT+CSMP (add 64).
Example: "ABCDEFGH" typed is sent and stored uncompressed as → 4142434445464748'H (stored compressed as 41E19058341E91'H)

Case 2
Every data byte is sent as 2 IRA characters.
Maximum text length is 280 IRA characters which will be converted into 140 bytes SMS binary user data
Example: "C8" typed is sent as 43'H, 38'H → stored as C8'H

Case 3
Every 16-bit value is sent as 4 IRA characters.
Maximum text length is 280 IRA characters which will be converted into 70 UCS2 characters (16-bit each)
Number of IRA characters must be a multiple of four because always 4 half bytes are needed for a 16-bit value
Example: "D2C8" typed is sent as 44'H, 32'H, 43'H, 38'H → stored as D2C8'H

Case 4
Every GSM character is sent as 4 IRA characters representing one UCS2 character.
Example: To store text "ABC" using UCS2 character set you have to type "004100420043".
This is sent as 30'H,30'H,34'H,31'H, 30'H,30'H,34'H,32'H, 30'H,30'H,34'H,33'H → detected as IRA representation of 3 UCS2 characters, converted to GSM character set and stored as 41'H, 42'H, 43'H.
Maximum input is 640 IRA characters representing 160 UCS2 characters when compression is active. These are converted to 160 GSM 7-bit characters.
Without compression only 140 GSM characters can be stored which are put in as 560 IRA characters.
Values of UCS2 characters must be smaller than 80'H (128 decimal) to be valid GSM characters.
Number of IRA characters must be a multiple of four. Problems:
- "41" → Error, there are four IRA characters (two bytes) needed
- "0000" → Error, not an UCS2 character
- "4142" → Error, value of UCS2 character > 7F'H
- "008B" → Error, value of UCS2 character > 7F'H
  This affects the maximum input length of a string)

Case 5
Every UCS2 character is sent as 4 IRA characters and is converted into two 8-bit values. This means that the first two characters have to be '00'.
Example: UCS2 character 009F'H typed as "009F" is sent as 30'H,30'H,39'H,46'H → converted into 8-bit value 9F'H.
Maximum number of UCS2 characters is 140 which are represented by 560 IRA characters. Number of IRA characters must be a multiple of four.

Case 6
Every UCS2 character is sent as 4 IRA characters each and is converted into a 16-bit value again.
Example: UCS2 character 9F3A'H typed as "9F3A" is sent as 39'H,46'H,33'H,41'H → converted into 9F3A'H.
Maximum number of UCS2 characters is 70 which are represented by 280 IRA characters. Number of IRA characters must be a multiple of four.
Invalid UCS2 values must be prevented.

1.9 Unsolicited Result Code Presentation

URC stands for Unsolicited Result Code and is a report message issued by the ME without being requested by the TE, i.e. a URC is issued automatically when a certain event occurs. Hence, a URC is not issued as part of the response related to an executed AT command.
Typical events leading to URCs are incoming calls ("RING"), waiting calls, received short messages, changes in temperature, network registration etc.
For most of these messages, the ME needs to be configured whether or not to send a URC. Descriptions of these URCs are provided with the associated AT command. URCs which are not user definable are described in Section 1.9.1, Common URCs. A summary of all URCs can be found in Section 21.7, Summary of Unsolicited Result Codes (URC).

Important: If the interface used for URC output is reserved by an active data connection or a long running AT command, URCs are buffered internally and will be issued after the interface becomes idle again. A pending URC will be signaled on the URC output interface via RING line. This allows to systematically suspend any longer data connection (refer +++ and ATO) to check for pending URCs after being signaled!
For detailed information regarding configuration of URC signaling refer to AT^SCFG, "URC/Ringline", <urcRinglineCfg>.

Parameter Description

<info>(num)	
200	URC will be send 40 seconds after syste-up when the JRC midlet was not tried to start (no autostart, no midlet at all, whatever). Used to see in logs, that midlet is not running, as example.
201	The JRC midlet was started, but did not succeed to full init itself within a (JRC midlet defined) timeout. 5 seconds after this URC, the module will restart.
202	The midlet was tried to start 5x, but was restarted (with ^SYSINFO: 201). Now, the JRC midlet start was cancelled. No JRC midlet is running. A shutdown timer of 10 minutes is started. After this timer, the module will be switched off.

1.9.1 Common URCs

This section describes all URCs not associated to a certain AT command. They cannot be defined by the user and appear automatically when the conditions described below occur.

Notes for "^SBC" URCs reporting undervoltage/overvoltage conditions:
Please refer to [2] for specifications regarding the minimum and maximum operating voltage limits. If the supply voltage exceeds the defined thresholds the ME switches off automatically. The automatic shutdown procedure is equivalent to the power-down initiated with the AT^SMSO command.

URC 1

^SYSLOADING

Indicates that the ME is in the process of starting up. Do not enter AT commands until the "^SYSSTART" URC has shown up.

URC 2

^SYSSTART

Indicates that the ME has been restarted to Normal mode or Airplane mode and is ready to operate.
For Normal and Airplane mode see AT+CFUN.
Note: Autobaud mode (see AT+IPR) requires an "AT" or "at" string be given after restarting the ME. This enables the ME to detect the bit rate set in the TE. After detecting the bit rate the ME will send the "^SYSSTART" URC.

URC 3

+PBREADY

After SIM PIN authentication has completed this URC indicates that the ME has completed reading data from the SIM and that phonebook and SMS functions are ready for read and write operation.
Any attempt to use phonebook or SIM PIN dependent SMS AT commands before the ME has finished reading SIM data will be denied with error codes, such as "+CME ERROR: SIM busy" or "+CMS ERROR: SIM busy".

URC 4

^SYSINFO: <info>

System information URC.

URC 5

^SBC: Undervoltage Warning

Supply voltage is close to the defined undervoltage threshold.

URC 6

^SBC: Undervoltage Shutdown

Undervoltage threshold exceeded. ME automatically switches off.

URC 7

^SBC: Overvoltage Warning

Supply voltage is close to defined overvoltage threshold.

URC 8

^SBC: Overvoltage Shutdown

Overvoltage threshold exceeded. ME automatically switches off.

1.10 Errors and Messages

The command result codes "+CME ERROR: <err>" and "+CMS ERROR: <err>" indicate errors related to mobile equipment or network functionality.

The format of <err> can be either numeric or verbose and is selectable via AT+CMEE.

A result error code terminates the execution of the command and prevents the execution of all remaining commands that may follow on the same command line. If so, neither "ERROR" nor "OK" result codes are returned for these commands. A 30 seconds timeout will deliver "ERROR" when the input of a command is not complete.

Using the wrong command syntax may result in errors: For example, using the execute command syntax although the command has no execute format, causes "ERROR" to be returned. Likewise, using the write command syntax although the command has no write format causes "+CME ERROR: <err>" to be returned.

See also:

- Section 2.10.1, CME/CMS Error Code Overview
- Section 2.5.1, Verbose and numeric result codes
- Section 3.1, AT+CEER

2. Configuration Commands

The AT Commands described in this chapter allow the external application to determine the EHS6-A's behaviour under various conditions.

2.1 AT&F Reset AT Command Settings to Factory Default Values

AT&F resets AT command settings to their factory default values.

For a list of affected parameters refer to Section 21.6, Factory Default Settings Restorable with AT&F.

Syntax

Exec Command
AT&F[<value>]
Response(s)
OK

PIN	✈	Last
-	+	-

Reference(s)
V.250

Parameter Description

<value>(num)	
[0]	Reset parameters in Section 21.6, Factory Default Settings Restorable with AT&F to their factory default values.

2.2 AT&V Display current configuration

AT&V returns the current parameter setting. The configuration varies depending on whether or not PIN authentication has been done.

Syntax

Exec Command

AT&V[<value>]

Response(s)

ACTIVE PROFILE:
... (see Section 2.2.1, AT&V responses)
OK

PIN	✈	Last
-	+	-

Reference(s)

V.250

Parameter Description

<value>(num)

[0]	Profile number

Note

- The parameter of AT+CSDH will only be displayed in SMS Text mode, see AT+CMGF.

2.2.1 AT&V responses

The following tables show four different kinds of responses depending on whether or not the PIN is entered.

PIN authentication done	No PIN authentication
ACTIVE PROFILE: E1 Q0 V1 X4 &C1 &D2 &S0 \Q0 S0:000 S3:013 S4:010 S5:008 S6:000 S7:060 S8:000 S10:002 +CBST: 7,0,1 +CRLP: 61,61,78,6 +CR: 0 +CRC: 0 +CMGF: 1 +CSDH: 0 +CNMI: 0,0,0,0,1 +ICF: 3 +CMEE: 2 +CSMS: 0,1,1,1 +CREG: 0,1 +CLIP: 0,2 +COPS: 0,0,"operator",0 +CGSMS: 3 OK	ACTIVE PROFILE: E1 Q0 V1 X4 &C1 &D2 &S0 \Q0 S0:000 S3:013 S4:010 S5:008 S6:000 S7:060 S8:000 S10:002 +CBST: 7,0,1 +CRLP: 61,61,78,6 +CR: 0 +ICF: 3 OK

2.3 AT&W Store AT Command Settings to User Defined Profile

AT&W stores the current AT command settings to a user defined profile in non-volatile memory of EHS6-A. The AT command settings will automatically be restored from the user defined profile during power-up or if ATZ is used. AT&F restores AT command factory default settings. Hence, until first use of AT&W, ATZ works as AT&F. A list of parameters stored to the user profile can be found at Section 21.5, AT Command Settings storable with AT&W.

Syntax

Exec Command
AT&W[<value>]
Response(s)
OK ERROR +CME ERROR: <err>

PIN	✈	Last
-	+	-

Reference(s)
V.250

Parameter Description

<value>(num)

[0]	User Profile Number

2.4 ATQ Result Code Presentation Mode

ATQ controls if the EHS6-A transmits any result code to the TE. Other information text transmitted as response is not affected.

Syntax

Exec Command

ATQ[<n>]

Response(s)

If <n>=0:
OK
If <n>=1:
(none)

PIN	✈	Last
-	+	-

Reference(s)

V.250

Parameter Description

<n>(num)(&V)(&W)

Result Code Presentation Mode.
It is not recommended to change this value.

[0](&F)(D)	ME transmits result code.
1	Result codes are suppressed and not transmitted.

2.5 ATV Result code format mode

This command determines the contents of header and trailer transmitted with AT command result codes and information responses. Possible responses are described in Section 2.5.1, Verbose and numeric result codes.

Syntax

Exec Command

`ATV[<value>]`

Response(s)

`OK`
`ERROR`

PIN	✈	Last
-	+	-

Reference(s)

ITU-T V.250 [15]

Parameter Description

`<value>`(num)(&V)(&W)

[0]	Information response: <text><CR><LF> Short result code format: <numeric code><CR>
1(&F)(D)	Information response: <CR><LF><text><CR><LF> Long result code format: <CR><LF><verbose code><CR><LF>

2.5.1 Verbose and numeric result codes

Verbose format	Numeric format	Meaning
OK	0	command executed, no errors
CONNECT	1	link established
RING	2	ring detected
NO CARRIER	3	link not established or disconnected
ERROR	4	invalid command or command line too long
NO DIALTONE	6	no dial tone, dialling impossible, wrong mode
BUSY	7	remote station busy
NO ANSWER	8	no answer
CONNECT 2400/RLP	10	link with 2400 bps
CONNECT 4800/RLP	11	link with 4800 bps
CONNECT 9600/RLP	12	link with 9600 bps

2.6 ATX CONNECT Result Code Format

ATX determines whether or not the EHS6-A transmits particular result codes to the TE. It also controls whether or not the ME verifies the presence of a dial tone when it begins dialing, and if engaged tone (busy signal) detection is enabled.

Syntax

Exec Command
ATX[<value>]
Response(s)
OK ERROR

PIN ✈	Last
-	+ -

Reference(s)
V.250

Parameter Description

<value>(num)(&V)(&W)	
[0]	CONNECT result code only returned. Dial tone and busy detection are disabled.
1	CONNECT <text> result code only returned. Dial tone and busy detection are both disabled.
2	CONNECT <text> result code returned. Dial tone detection is enabled, busy detection is disabled.
3	CONNECT <text> result code returned. Dial tone detection is disabled, busy detection is enabled.
4(&F)	CONNECT <text> result code returned. Dial tone and busy detection are both enabled.

2.7 ATZ Restore AT Command Settings from User Defined Profile

First ATZ resets the AT command settings to their factory default values, similar to AT&F. Afterwards the AT command settings are restored from a user defined profile in non-volatile memory of EHS6-A, if one was stored with AT&W before. Any additional AT command on the same command line may be ignored. A delay of 300 ms is required before next AT command can be sent.

Syntax

Exec Command	
ATZ[<value>]	
Response(s)	
OK	

PIN	✈	Last
-	+	-

Reference(s)
V.250

Parameter Description

<value>(num)

[0]	User Profile Number

2.8 AT+CFUN Functionality Level

AT+CFUN controls EHS6-A's functionality level. It can also be used to reset the ME.

Syntax

Test Command

AT+CFUN=?

Response(s)

+CFUN: (list of supported <fun>s), (list of supported <rst>s)
OK
ERROR
+CME ERROR: <err>

Read Command

AT+CFUN?

Response(s)

+CFUN: <power_mode>, <STK_mode>
OK
ERROR
+CME ERROR: <err>

Write Command

AT+CFUN=<fun>[, <rst>]

Response(s)

OK
ERROR
+CME ERROR: <err>
If <fun>= 0:
OK
^SHUTDOWN
If <rst>= 1:
OK
^SYSSTART

PIN	✈	Last
-	+	-

Reference(s)

3GPP TS 27.007 [44]

Parameter Description

<fun>(num)	
0	Switch off ME. ME returns OK followed by "^SHUTDOWN" URC. See also AT^SMSO command.
1(D)	Full functionality level.
4	Airplane mode. Shut down TX and RX RF-circuits whereby EHS6-A logs off from the network and switches to AT+COPS=2. All AT commands whose execution requires a radio connection will return an error response (such as "NO CARRIER" or "+CME ERROR: NO NETWORK SERVICE". A list of AT commands supported during Airplane mode can be found in Section 21.4, Availability of AT Commands Depending on Operating Mode of ME. After leaving Airplane mode by setting AT+CFUN=1 the AT+COPS write command shall be used to register to a network once again.

6	This mode was implemented in EHS6-A Release 1 for activating the USAT interface. As of EHS6-A Release 2 the mode is deprecated and no longer effective. USAT can now be used in Automatic or Explicit Response Mode depending on AT^SSTA settings.
7	Reserved for future use.
8	Reserved for future use.

<rst>(num)

Parameter <rst> applies only to <fun> 1 and 4.

[0]	ME switches to <fun> level without reset.
1	ME resets and restarts to full functionality level or Airplane mode, depending on given <fun> value. "^SYSSTART" URC indicates that the ME is ready to operate. Note: Autobaud mode (see AT+IPR) requires an "AT" or "at" string be given after restart. This enables the ME to detect the bit rate set in the TE. After detecting the bit rate the ME will send the "^SYSSTART" URC.

<power_mode>(num)

1	ME is switched on
2	Invalid mode
4	Airplane mode

<STK_mode>(num)

0	Deprecated. See above <fun> value 6.
6	Deprecated. See above <fun> value 6.
7	Reserved for future use.
8	Reserved for future use.

2.9 AT^SMSO Switch Off EHS6-A

AT^SMSO initiates EHS6-A's power-off procedure. Do not send any other AT command after this.

Low level of the ME's V180 signal and the URC "^SHUTDOWN" notify that the procedure has completed and the ME has entered the POWER DOWN mode. Therefore, be sure not to disconnect the operating voltage until the V180 signal has gone low and until the URC "^SHUTDOWN" is displayed. Otherwise, you run the risk of losing data. For further details on how to turn off the ME refer to [2]. If a fast switch off (see parameter <fso> in AT^SCFG) is enabled, there is no reply like OK, ERROR or any "^SHUTDOWN" URC.

Syntax

Test Command

```
AT^SMSO=?
```

Response(s)

```
OK
```

Exec Command

```
AT^SMSO
```

Response(s)

```
^SMSO: MS OFF
OK
ERROR
```

PIN	✈	Last
-	+	+

Unsolicited Result Code

^SHUTDOWN

Indicates that the power-off procedure is finished and the module will be switched off in less than 1 second.
If <fso> is used to enable a fast ME switch off, there will be no "^SHUTDOWN" URC.

Note

- If <fso> is used to enable a fast ME switch off, flash access cycles (writing/deleting) will be finalized, but there will no longer be any network deregistration, the current settings will not be saved and there will be no further output on the interfaces. All other jobs will be deleted and logical data consistance cannot be guaranteed.

2.10 AT+CMEE Error Message Format

AT+CMEE controls the format of error result codes that indicates errors related to EHS6-A functionality. Format can be selected between plain "ERROR" output, error numbers or verbose "+CME ERROR: <err>" and "+CMS ERROR: <err>" messages.
Possible error result codes are listed in Table 2.1, General "CME ERROR" Codes (3GPP TS 27.007), Table 2.2, General "CME ERROR" Codes (proprietary), Table 2.3, GPRS related "CME ERROR" Codes (3GPP TS 27.007) and Table 2.4, SMS related "CMS ERROR" Codes (3GPP TS 27.005).

Syntax

Test Command

```
AT+CMEE=?
```

Response(s)

```
+CMEE: (list of supported<errMode>s)
OK
```

Read Command

```
AT+CMEE?
```

Response(s)

```
+CMEE: <errMode>
OK
```

Write Command

```
AT+CMEE=<errMode>
```

Response(s)

```
OK
ERROR
+CME ERROR: <err>
```

PIN	✈	Last
-	+	-

Reference(s)

3GPP TS 27.007 [44], 3GPP TS 27.005 [43]

Parameter Description

<errMode>(num)(&V)(&W)	
0(&F)(D)	Disable result code, i.e. only "ERROR" will be displayed.
1	Enable error result code with numeric values.
2	Enable error result code with verbose (string) values.

Example

To obtain enhanced error messages it is recommended to choose <errMode>=2.

```
AT+CMEE=2
OK
```

2.10.1 CME/CMS Error Code Overview

Table 2.1: General "CME ERROR" Codes (3GPP TS 27.007)

+CME <err> Code	Text (if AT+CMEE=2)
0	phone failure
1	no connection to phone
2	phone adapter link reserved
3	operation not allowed
4	operation not supported
5	PH-SIM PIN required
6	PH-FSIM PIN required
7	PH-FSIM PUK required
10	SIM not inserted
11	SIM PIN required
12	SIM PUK required
13	SIM failure
14	SIM busy
15	SIM wrong
16	incorrect password
17	SIM PIN2 required
18	SIM PUK2 required
20	memory full
21	invalid index
22	not found
23	memory failure
24	text string too long
25	invalid characters in text string
26	dial string too long
27	invalid characters in dial string
30	no network service
31	network timeout
32	network not allowed - emergency calls only
40	network personalization PIN required
41	network personalization PUK required
42	network subset personalization PIN required
43	network subset personalization PUK required
44	service provider personalization PIN required
45	service provider personalization PUK required
46	corporate personalization PIN required
47	corporate personalization PUK required
48	hidden key required (NOTE: This key is required when accessing hidden phonebook entries.)
49	EAP method not supported

+CME <err> Code	Text (if AT+CMEE=2)
50	Incorrect parameters
100	Unknown
256	operation temporary not allowed
257	call barred
261	SS not executed
500	CTS Handover on Progress
501	Cellular Protocol Stack Out of service state
502	CTS Unspecified Error

Table 2.2: General "CME ERROR" Codes (proprietary)

+CME <err> Code	Text (if AT+CMEE=2)
615	network failure
616	network is down
639	service type not yet available
640	operation of service temporary not allowed
764	missing input value
765	invalid input value
767	operation failed

Table 2.3: GPRS related "CME ERROR" Codes (3GPP TS 27.007)

+CME <err> Code	Text (if AT+CMEE=2)
103	illegal MS
106	illegal ME
107	GPRS services not allowed
111	PLMN not allowed
112	location area not allowed
113	roaming not allowed in this location area
132	service option not supported
133	requested service option not subscribed
134	service option temporary out of order
148	unspecified GPRS error
149	PDP authentication failure
150	invalid mobile class
151	Unassigned (unallocated) number
152	No route to destination
153	Channel unacceptable
154	Operator determined barring
155	Normal call clearing
156	User busy
157	No user responding
158	User alerting, no answer
159	Call rejected

+CME <err> Code	Text (if AT+CMEE=2)
160	Number changed
161	Non selected user clearing
162	Destination out of order
163	Invalid number format (incomplete number)
164	Facility rejected
165	Response to STATUS ENQUIRY
166	Normal, unspecified
167	No circuit/channel available
168	Network out of order
169	Temporary failure
170	Switching equipment congestion
171	Access information discarded
172	requested circuit/channel not available
173	Resources unavailable, unspecified
174	Quality of service unavailable
175	Requested facility not subscribed
176	Incoming calls barred within the CUG
177	Bearer capability not authorized
178	Bearer capability not presently available
179	Service or option not available, unspecified
180	Bearer service not implemented
181	ACM equal to or greater than ACMmax
182	Requested facility not implemented
183	Only restr. digital information bearer capability
184	Service or option not implemented, unspecified
185	Invalid transaction identifier value
186	User not member of CUG
187	Incompatible destination
188	Invalid transit network selection
189	Semantically incorrect message
190	Invalid mandatory information
191	Message type non-existent or not implemented
192	Message type not compatible with protocol state
193	Information element non-existent or not implemented
194	Conditional IE error
195	Message not compatible with protocol state
196	Recovery on timer expiry
197	Protocol error, unspecified
198	Interworking, unspecified
199	Number not allowed
200	CCBS possible
596	GPRS - invalid CID value

Table 2.4: SMS related "CMS ERROR" Codes (3GPP TS 27.005)

+CMS <err> Code	Text (if AT+CMEE=2)
1	unassigned (unallocated) number
8	operator determined barring
10	call barred
13	SMS timer expired
14	SMS forwarding availability failed
17	Network failure
21	Short message transfer rejected
22	Memory capacity exceeded
27	Destination out of order (service)
28	unidentified subscriber
29	facility rejected
30	unknown subscriber
38	Network out of order (service)
41	temporary failure
42	congestion
47	Resource unavailable, unspecified
50	requested facility not subscribed
69	requested facility not implemented
81	invalid short message transfer reference value
95	Semantically invalid message, unspecified
96	invalid mandatory information
97	message type non-existent or not implemented
98	message not compatible with short message protocol state
99	information element non-existent or not implemented
111	protocol error, unspecified
127	interworking, unspecified
128	telematic interworking not supported
129	short message type 0 not supported
130	cannot replace short message
143	unspecified TP-PID error
144	data coding scheme (alphabet) not supported
145	message class not supported
159	unspecified TP-DCS error
160	command cannot be actioned
161	command unsupported
175	unspecified TP-command error
176	TPDU not supported
192	SC busy
193	no SC subscription
194	SC system failure
195	Invalid Short Message Entity(SME) address (MO)

+CMS <err> Code	Text (if AT+CMEE=2)
196	Destination SME barred (MO)
197	SM rejected duplicated SM (MO)
198	TP-VPF (validity period format) not supported (MO)
199	TP-VP (validity period) not supported (MO)
208	(U)SIM SMS storage full (MT)
209	no SMS storage capability in (U)SIM (MT)
210	Error in MS (MT)
211	Memory capacity exceeded (MT)
212	(U)SIM Application Toolkit busy
213	(U)SIM data download error
255	unspecified error cause
287	Network failure unspecified
290	Network no resource
300	ME failure
301	SMS service of ME reserved
302	operation not allowed
303	operation not supported
304	invalid PDU mode parameter
305	invalid text mode parameter
310	SIM not inserted
311	SIM PIN necessary
312	PH-SIM PIN necessary
313	SIM failure
314	SIM busy
315	SIM wrong
320	Memory failure
321	Invalid memory index
322	Memory full
330	SMSC address unknown
331	No network service
332	Network timeout
340	No CNMA acknowledgement expected
500	Unknown error
512	Relay path Acknowledgement
513	SMS timer expired
514	SMS forwarding availability failed
515	SMS forwarding availability aborted
516	Invalid TP-MESSAGE-Type Indicator
517	No TP-Status Report in Phase 1
518	No TP-Reject-Duplicate in Phase 1
519	No TP-Reply-Path in Phase 1
520	No TP-User-Data-Header in Phase 1

+CMS <err> Code	Text (if AT+CMEE=2)
521	Missing TP-Validity-Period
522	Invalid TP-Service-Centre-Time-Stamp
523	Missing TP-Destination-Address
524	Invalid TP-Destination-Address
525	Missing Service-Centre-Address
526	Invalid Service-Centre-Address
527	Invalid alphabet
528	Invalid TP-User-Data-Length
529	Missing TP-User-Data
530	TP-User-Data too long(large)
531	No command request in Phase 1
532	Command Request Invalid TP-Destination Address
533	Command Request Invalid TP-User-Data Length
534	Command Request Invalid TP-User-Data
535	Command Request Invalid TP-Command-Type
536	MN MNR creation failed
538	MS Network connection lost
539	Pending MO SM transfer
540	MO SMS rejected by SIM MO SMS control
541	RP ERROR OK
542	RP ERROR OK no icon display
543	FDN check failed
544	Sending of SMS failed. Cause is Service Centre Address (SCA) FDN failed
545	Sending of SMS failed. Cause is Destination Address (DA) FDN failed.
546	BDN check failed
547	Unspecified SMS PP error
548	No Route To Destination
549	Channel Unacceptable
555	No Circuit/Channel Available
556	Access Information Discarded
557	Requested Circuit/Channel Not Available By Other Side
558	Quality Of Service Unavailable
560	Bearer Capability Not Authorized
561	Bearer Capability Not Presently Available
562	Service or Option Not Available, Unspecified
563	Bearer Service Not Implemented
564	ACM Equal to or Greater Than ACMmax
565	Only Restricted Digital Information Bearer Capability Is Available
566	Service or Option Not Implemented, Unspecified
567	User Not Member of CUG
568	Incompatible By Destination
569	Invalid Transit Network Selection

+CMS <err> Code	Text (if AT+CMEE=2)
571	Message Not Compatible With Protocol State
572	Recovery On Timer Expiry
576	Data Call Active
577	Speech Call Active
579	MOC Setup Rejected Due to Missing ACM Info
580	Temporary Forbidden Call Attempt
581	Called Party is Blacklisted
583	Temporary Forbidden Call Attempt No Service
584	Temporary Forbidden Call Attempt Limited Service
585	Client Temporary Barred
587	Atc Fclass Not Speech
590	Client Not Registrated
591	Active Client Gone
595	Rejected By Call Control
604	MM No Service (out of coverage)
605	MM Access Class Barred (RR_REL_IND During RR Conn. Establishment
606	ME Busy -CM Service Request Already Pending
608	Rejected Due To SUP Timer Expiry
609	Rejected Due To USSD Busy
610	Rejected Due To SS Busy
610	Rejected Due To SS Busy
612	SIM Toolkit Request Is Rejected, Because Another SIM Toolkit Request Is Pending
614	Rejected Because SIM Toolkit Request Is Not Yet Answered By The User
615	MN Setup SS Error
615	MN Setup SS Error
616	Call Controller Blocked (Other Call Command Pending)
618	Environment Parameter Not Set Correctly (Fclass/Cmod)
619	Other Blocking Call Present
620	Lower Layer Failure
621	The Authentication Proedure Failed
622	The Packet-Switched Registration Procedure Failed
623	CM Service Reject From The Network
624	The ABORT Message Was Received From The Network
625	Timer Expiry
626	IMSI Deatch Was Initiated
627	Normal RR Connection Release (2G)
628	Registration Failed
630	Failure Due To Handover
631	Link Establishment Failure
632	Random Access Failure
633	Radio Link Aborted

+CMS <err> Code	Text (if AT+CMEE=2)
634	Lower Layer Failure in Layer 1
635	Immediate Assignment Reject
636	Failure Due To Paging
637	Abnormal Release Unspecified
638	Abnormal Release Channel Unacceptable
639	Abnormal Release Timer Expired
640	Abnormal Release No Act On Radio Path
641	Preemptive Release
642	UTRAN Configuration Unknown
643	Handover Impossible
644	Channel Mode Unacceptable
647	Lower Layer Failure From NW
649	Conditional IE Error
650	No Cell Allocation Available
653	Re Establishment Reject
654	Directed Sigconn Re Establishment
656	Release of RRC connection Witout Network Activity(3G) Lower Layer Failure Downlink
657	Lower Layer Failure Uplink
658	Cell Barred Due To Authentication Failure
659	Signalling Connection Release
660	CS Connection Release Triggered By MM
661	RRC Connection Establishment Failure
662	RRC Connection Establsihment Reject With Redirection
663	Resource Conflict
664	Layer Layer Failure in Layer 2
665	L2 Cause T200 Expiry N200 Plus 1 Times
669	RR Connection Release Due to BAND Change (2G)
670	Release of the RRC Connection Due to Out of Service in Cell_Fach (3G)"
671	Release of the RRC Connection Due to Not Matching PLMN in Shared Networks(3G)
672	Error Happens While Call Is Already Disconnected / Late Error
674	SIM Toolkit Cannot Initiate A Call, Because MMI Is Not Registered
675	SIM Toolkit Call Setup Request Is Rejected Due User Did Not Accept
676	Proactive SIM Appl Terminated By User
677	SIM Toolkit Originated SIM Reset (Refresh Request)
680	Dial String/Number Incorrect

2.11 AT+CSCS Character Set

AT+CSCS write command informs the EHS6-A which character set is used by the TE. This enables the ME to convert character strings correctly between TE and ME character sets. Please also refer to Section 1.8, Supported character sets.
Note: If ME-TE interface is set to 8-bit operation (AT+ICF) and selected character set is <chset>="GSM" (7-bit), the highest bit will be set to zero.

Syntax

Test Command

```
AT+CSCS=?
```

Response(s)

```
+CSCS: (list of supported<chset>s)
OK
```

Read Command

```
AT+CSCS?
```

Response(s)

```
+CSCS: <chset>
OK
```

Write Command

```
AT+CSCS=<chset>
```

Response(s)

```
OK
ERROR
+CME ERROR: <err>
```

PIN	✈	Last
-	+	-

Reference(s)

3GPP TS 27.007 [44]

Parameter Description

<chset>(str)

“GSM“(&F)(P)	GSM 7 bit default alphabet (3GPP TS 23.038 [34], Subclause 6.2.1).
“UCS2“	16-bit universal multiple-octet coded character set (ISO-10646 [12]). UCS2 character strings are converted to hexadecimal numbers in the range 0000 to FFFF; e.g. "004100620063" equates to three 16-bit characters with decimal values 65, 98 and 99.

2.12 AT^SCFG Extended Configuration Settings

AT^SCFG can be used to query and configure various settings of the EHS6-A.
AT^SCFG read command returns a list of all supported parameters and their current values.
AT^SCFG write command queries a configuration parameter (if no value is entered) or sets its value(s).
Input of parameter names is always coded in GSM character set, parameter values are expected to be given as specified via AT+CSCS.

Syntax

Test Command

AT^SCFG=?

Response(s)

^SCFG: "Audio/Loop", (list of supported <al>s)
^SCFG: "Call/Ecall/AckTimeout", (list of supported <acktimeout>s)
^SCFG: "Call/Ecall/Callback", (list of supported <callback>s)
^SCFG: "Call/Ecall/CallbackTimeout", (list of supported <callbacktimeout>s)
^SCFG: "Call/Ecall/Msd", (length of <msd>s)
^SCFG: "Call/Ecall/Pullmode", (list of supported <pullmode>s)
^SCFG: "Call/Ecall/SessionTimeout", (list of supported <sessiontimeout>s)
^SCFG: "Call/Ecall/StartTimeout", (list of supported <starttimeout>s)
^SCFG: "Call/ECC", (list of supported <ecc>s)
^SCFG: "Call/Speech/Codec", (list of supported <scc>s)
^SCFG: "GPIO/mode/ASC1", (list of supported <g_mode>s)
^SCFG: "GPIO/mode/DAI", (list of supported <g_mode>s)
^SCFG: "GPIO/mode/DCD0", (list of supported <g_mode>s)
^SCFG: "GPIO/mode/DSR0", (list of supported <g_mode>s)
^SCFG: "GPIO/mode/DTR0", (list of supported <g_mode>s)
^SCFG: "GPIO/mode/FSR", (list of supported <g_mode>s)
^SCFG: "GPIO/mode/HSIC", (list of supported <g_mode>s)
^SCFG: "GPIO/mode/PULSE", (list of supported <g_mode>s)
^SCFG: "GPIO/mode/PWM", (list of supported <g_mode>s)
^SCFG: "GPIO/mode/RING0", (list of supported <g_mode>s)
^SCFG: "GPIO/mode/SPI", (list of supported <g_mode>s)
^SCFG: "GPIO/mode/SYNC", (list of supported <g_mode>s)
^SCFG: "GPRS/AutoAttach", (list of supported <gaa>s)
^SCFG: "MEopMode/CFUN", (list of supported <cfun>s), (list of supported <cfun_save>s)
^SCFG: "MEopMode/Dormancy", (list of supported <dormancy>s)
^SCFG: "MEopMode/SoR", (list of supported <SoR mode>s)
^SCFG: "Ident/Manufacturer", (max. string length of <manufacturer>)
^SCFG: "Ident/Product", (max. string length of <product>)
^SCFG: "MEShutdown/Fso", (list of supported <fso>s)
^SCFG: "MEShutdown/sVsup/threshold", (list of supported <vthresh>s), (list of supported <PowerSupplyDomain>s)
^SCFG: "Radio/Band", (list of supported <rba>s)
^SCFG: "Radio/Mtpl", (list of supported <PL_mode>s), (list of supported <PL_profile>s), (list of supported <rba>s), (list of supported <PL_limit>s), (list of supported <PL_limit8psk>s)
^SCFG: "Radio/OutputPowerReduction", (list of supported <ropr>s)
^SCFG: "Serial/Interface/Allocation", (list of supported <curSerialIfcAlloc>s), (list of supported <reqSerialIfcAlloc>s)
^SCFG: "Serial/USB/DDD" , (list of supported <deviceDescr>s) , (list of supported <descrIndex>s) , (max. string length of <langId>) , (max. string length of <vendorId>) , (max. string length of <productId>) , (max. string length of <manufacturer>) , (max. string length of <product>) , (max. string length of <serialNo>)
^SCFG: "Tcp/IRT", (list of supported <tcpIrt>)
^SCFG: "Tcp/MR", (list of supported <tcpMr>)
^SCFG: "Tcp/OT", (list of supported <tcpOt>)

Test Command (Continued)

AT^SCFG=?

Response(s)

^SCFG: "Tcp/WithURCs", (list of supported <tcpWithUrc>)
^SCFG: "Trace/Syslog/OTAP", (list of supported <otapTracer>), (list of supported <uwDevice>), (list of supported <intvalue>), (max. string length of <filename>), (list of supported <logmode>), (list of supported <blockmode>)
^SCFG: "URC/Ringline", (list of supported <urcRinglineCfg>s)
^SCFG: "URC/Ringline/ActiveTime", (list of supported <urcRinglineDuration>s)
^SCFG: "Userware/Autostart", (list of supported <ua>s)
^SCFG: "Userware/Autostart/Delay", (list of supported <uad>s)
^SCFG: "Userware/DebugInterface", (max. string lengths of <udbgif1>), (max. string lengths of <udbgif2>), (max. string lengths of <udbgif3>)
^SCFG: "Userware/DebugMode", (list of supported <userwaremode>)
^SCFG: "Userware/Passwd", (max. string length of <upwd>)
^SCFG: "Userware/Stdout", (list of supported <uwDevice>), (list of supported <intvalue>), (max. string lengths of <filename>), (list of supported <logmode>), (list of supported <blockmode>)
^SCFG: "Userware/Watchdog", (list of supported <wd>)
OK

Read Command

AT^SCFG?

Response(s)

^SCFG: "Audio/Loop", <al>
^SCFG: "Call/Ecall/AckTimeout", <acktimeout>
^SCFG: "Call/Ecall/Callback", <callback>
^SCFG: "Call/Ecall/CallbackTimeout", <callbacktimeout>
^SCFG: "Call/Ecall/Msd", <msd>
^SCFG: "Call/Ecall/Pullmode", <pullmode>
^SCFG: "Call/Ecall/SessionTimeout", <sessiontimeout>
^SCFG: "Call/Ecall/StartTimeout", <starttimeout>
^SCFG: "Call/ECC", <ecc>
^SCFG: "Call/Speech/Codec", <scc>
^SCFG: "GPIO/mode/ASC1", <g_mode>
^SCFG: "GPIO/mode/DAI", <g_mode>
^SCFG: "GPIO/mode/DCD0", <g_mode>
^SCFG: "GPIO/mode/DSR0", <g_mode>
^SCFG: "GPIO/mode/DTR0", <g_mode>
^SCFG: "GPIO/mode/FSR", <g_mode>
^SCFG: "GPIO/mode/HSIC", <g_mode>
^SCFG: "GPIO/mode/PULSE", <g_mode>
^SCFG: "GPIO/mode/PWM", <g_mode>
^SCFG: "GPIO/mode/RING0", <g_mode>
^SCFG: "GPIO/mode/SPI", <g_mode>
^SCFG: "GPIO/mode/SYNC", <g_mode>
^SCFG: "GPRS/AutoAttach", <gaa>
^SCFG: "MEopMode/CFUN", <cfun>, <cfun_save>
^SCFG: "MEopMode/Dormancy", <dormancy>, <eCallUSIM>
^SCFG: "MEopMode/SoR", <SoR mode>
^SCFG: "Ident/Manufacturer", <manufacturer>
^SCFG: "Ident/Product", <product>
^SCFG: "MEShutdown/Fso", <fso>
^SCFG: "MEShutdown/sVsup/threshold", <vthresh_BB_curr>, <vthresh_BB_request>
^SCFG: "Radio/Band", <rba>
^SCFG: "Radio/Mtpl", <PL_mode>[, <PL_profile>]
^SCFG: "Radio/OutputPowerReduction", <ropr>
^SCFG: "Serial/Interface/Allocation", <curSerialIfcAlloc>, <reqSerialIfcAlloc>

Read Command (Continued)

AT^SCFG?

Response(s)

^SCFG: "Serial/USB/DDD" , <deviceDescr>, <descrIndex>, <langId>, <vendorId>, <productId>, <manufacturer>, <product>, <serialNo>
^SCFG: "Tcp/IRT", <tcpIrt>
^SCFG: "Tcp/MR", <tcpMr>
^SCFG: "Tcp/OT", <tcpOt>
^SCFG: "Tcp/WithURCs", <tcpWithUrc>
^SCFG: "Trace/Syslog/OTAP", <otapTracer>[, <uwDevice>, <intvalue>, <filename>), <logmode>, <blockmode>]
^SCFG: "URC/Ringline", <urcRinglineCfg>
^SCFG: "URC/Ringline/ActiveTime", <urcRinglineDuration>
^SCFG: "Userware/Autostart", <ua>
^SCFG: "Userware/Autostart/Delay", <uad>
^SCFG: "Userware/DebugInterface", <udbgif1>, <udbgif2>, <udbgif3>
^SCFG: "Userware/DebugMode", <userwaremode>
^SCFG: "Userware/Passwd"
^SCFG: "Userware/Stdout", <uwDevice>[, <intvalue>[, <filename>[, <logmode>]]], <blockmode>
^SCFG: "Userware/Watchdog", <wd>
OK

Write Command

Configure Audio Loop:

AT^SCFG="Audio/Loop"[, <al>]

Response(s)

^SCFG: "Audio/Loop", <al>
OK
ERROR
+CME ERROR: <err>

Write Command

Select eCall ACK timeout in milliseconds.

AT^SCFG="Call/Ecall/AckTimeout"[, <acktimeout>]

Response(s)

^SCFG: "Call/Ecall/AckTimeout", <acktimeout>
OK
ERROR
+CME ERROR: <err>

Write Command

Configure the inband modem for mobile terminate calls.

AT^SCFG="Call/Ecall/Callback"[, <callback>]

Response(s)

^SCFG: "Call/Ecall/Callback"
OK
ERROR
+CME ERROR: <err>

Write Command

Select eCall callback timeout in milliseconds.

AT^SCFG="Call/Ecall/CallbackTimeout"[, <callbacktimeout>]

Response(s)

^SCFG: "Call/Ecall/CallbackTimeout", <callbacktimeout>
OK

Write Command (Continued)

Select eCall callback timeout in milliseconds.

AT^SCFG="Call/Ecall/CallbackTimeout"[, <callbacktimeout>]

Response(s)

ERROR
+CME ERROR: <err>

Write Command

Select Msd data for eCall.

AT^SCFG="Call/Ecall/Msd"[, <msd>]

Response(s)

^SCFG: "Call/Ecall/Msd", <msd>
OK
ERROR
+CME ERROR: <err>

Write Command

Control Inband modem for Pull mode.

AT^SCFG="Call/Ecall/Pullmode"[, <pullmode>]

Response(s)

^SCFG: "Call/Ecall/Pullmode", <pullmode>
OK
ERROR
+CME ERROR: <err>

Write Command

Select eCall start timeout in milliseconds.

AT^SCFG="Call/Ecall/StartTimeout"[, <starttimeout>]

Response(s)

^SCFG: "Call/Ecall/StartTimeout", <starttimeout>
OK
ERROR
+CME ERROR: <err>

Write Command

Select eCall session timeout in milliseconds.

AT^SCFG="Call/Ecall/SessionTimeout"[, <sessiontimeout>]

Response(s)

^SCFG: "Call/Ecall/SessionTimeout", <sessiontimeout>
OK
ERROR
+CME ERROR: <err>

Write Command

Query/Configure Emergency numbers for USIM without ECC field

AT^SCFG="Call/ECC"[, <ecc>]

Response(s)

^SCFG: "Call/ECC", <ecc>
OK
ERROR
+CME ERROR: <err>

Write Command

Query/Configure 2G Speech Codec for voice calls

AT^SCFG="Call/Speech/Codec"[, <scc>]

Response(s)

^SCFG: "Call/Speech/Codec", <scc>
OK
ERROR
+CME ERROR: <err>

Write Command

Configure ASC1 interface lines RXD1, TXD1, RTS1, CTS1 shared with GPIO16 - GPIO19 lines and SPI lines MOSI, MISO, SPI_CS

AT^SCFG="GPIO/mode/ASC1"[, <g_mode>]

Response(s)

^SCFG: "GPIO/mode/ASC1", <g_mode>
OK
ERROR
+CME ERROR: <err>

Write Command

Configure Digital Audio Interface lines TXDDAI, RXDDAI, TFSDAI, SCLK shared with GPIO20 - GPIO23 lines

AT^SCFG="GPIO/mode/DAI"[, <g_mode>]

Response(s)

^SCFG: "GPIO/mode/DAI", <g_mode>
OK
ERROR
+CME ERROR: <err>

Write Command

Configure DCD0 line of ASC0 interface shared with GPIO2

AT^SCFG="GPIO/mode/DCD0"[, <g_mode>]

Response(s)

^SCFG: "GPIO/mode/DCD0", <g_mode>
OK
ERROR
+CME ERROR: <err>

Write Command

Configure DSR0 line of ASC0 interface shared with GPIO3 line and SPI_CLK line of SPI

AT^SCFG="GPIO/mode/DSR0"[, <g_mode>]

Response(s)

^SCFG: "GPIO/mode/DSR0", <g_mode>
OK
ERROR
+CME ERROR: <err>

Write Command

Configure DTR0 line of ASC0 interface shared with GPIO1 line

AT^SCFG="GPIO/mode/DTR0"[, <g_mode>]

Response(s)

^SCFG: "GPIO/mode/DTR0", <g_mode>
OK
ERROR
+CME ERROR: <err>

Write Command

Configure Fast Shutdown line FST_SHDN shared with GPIO4 line

AT^SCFG="GPIO/mode/FSR"[, <g_mode>]

Response(s)

^SCFG: "GPIO/mode/FSR", <g_mode>
OK
ERROR
+CME ERROR: <err>

Write Command

Configure HSIC interface shared with GPIO16 - GPIO19 lines, ASC1 lines and SPI lines MOSI, MISO, SPI_CS

AT^SCFG="GPIO/mode/HSIC"[, <g_mode>]

Response(s)

^SCFG: "GPIO/mode/HSIC", <g_mode>
OK
ERROR
+CME ERROR: <err>

Write Command

Configure Impulse Counter line (COUNTER) shared with GPIO8 line

AT^SCFG="GPIO/mode/PULSE"[, <g_mode>]

Response(s)

^SCFG: "GPIO/mode/PULSE", <g_mode>
OK
ERROR
+CME ERROR: <err>

Write Command

Configure DAC Pulse-Width Modulation lines PWM2 and PWM1 shared with GPIO6 and GPIO7 lines

AT^SCFG="GPIO/mode/PWM"[, <g_mode>]

Response(s)

^SCFG: "GPIO/mode/PWM", <g_mode>
OK
ERROR
+CME ERROR: <err>

Write Command

Configure RING0 line of ASC0 interface shared with GPIO24 line

AT^SCFG="GPIO/mode/RING0"[, <g_mode>]

Response(s)

^SCFG: "GPIO/mode/RING0", <g_mode>
OK
ERROR
+CME ERROR: <err>

Write Command

Configure SPI lines MOSI, MISO, SPI_CS shared with ASC1 lines and GPIO16, GPIO17, GPIO19 lines as well as SPI line SPI_CLK shared with GPIO3 and DSR0 of ASC0

AT^SCFG="GPIO/mode/SPI"[, <g_mode>]

Response(s)

^SCFG: "GPIO/mode/SPI", <g_mode>
OK
ERROR
+CME ERROR: <err>

Write Command

Configure Status LED line shared with GPIO5 line

AT^SCFG="GPIO/mode/SYNC"[, <g_mode>]

Response(s)

^SCFG: "GPIO/mode/SYNC", <g_mode>
OK
ERROR
+CME ERROR: <err>

Write Command

Automatic GPRS attach

AT^SCFG="GPRS/AutoAttach"[, <gaa>]

Response(s)

^SCFG: "GPRS/AutoAttach", <gaa>
OK
ERROR
+CME ERROR: <err>

Write Command

Enable/disable non volatile storage of AT+CFUN.

AT^SCFG="MEopMode/CFUN"[, <cfun>]

Response(s)

^SCFG: "MEopMode/CFUN", <cfun>, <cfun_save>
OK
ERROR
+CME ERROR: <err>

Write Command

AT^SCFG="MEopMode/Dormancy"[, <dormancy>]

Response(s)

^SCFG: "MEopMode/Dormancy", <dormancy>, <eCallUSIM>
OK
ERROR
+CME ERROR: <err>

Write Command

Query/Configure steering of roaming

AT^SCFG="MEopMode/SoR"[, <SoR mode>]

Response(s)

^SCFG: "MEopMode/SoR", <SoR mode>
OK
ERROR
+CME ERROR: <err>

Write Command

Configure manufacturer name.

AT^SCFG="Ident/Manufacturer"[, <manufacturer>]

Response(s)

^SCFG: "Ident/Manufacturer", <manufacturer>
OK
ERROR
+CME ERROR: <err>

Write Command

Configure product name.

AT^SCFG="Ident/Product"[, <product>]

Response(s)

^SCFG: "Ident/Product", <product>
OK
ERROR
+CME ERROR: <err>

Write Command

Enable/disable fast switch off.

AT^SCFG="MEShutdown/Fso"[, <fso>]

Response(s)

^SCFG: "MEShutdown/Fso", <fso>
OK
ERROR
+CME ERROR: <err>

Write Command

Query / configure undervoltage threshold

AT^SCFG="MEShutdown/sVsup/threshold"[, <vthresh>][, <PowerSupplyDomain>]

Response(s)

^SCFG: "MEShutdown/sVsup/threshold", <vthresh_BB_curr>, <vthresh_BB_request>
OK
ERROR
+CME ERROR: <err>

Write Command

Radio band selection

AT^SCFG="Radio/Band"[, <rba>]

Response(s)

^SCFG: "Radio/Band", <rba>
OK
ERROR
+CME ERROR: <err>

Write Command

Instant Power Limitation for SAR Reduction and Thermal Mitigation

AT^SCFG="Radio/Mtpl"[, <PL_mode>[, <PL_profile>, <rba>, <PL_limit>[, <PL_limit8psk>]]]

Response(s)

^SCFG: "Radio/Mtpl", <PL_mode>[, <PL_profile>, <rba>, <PL_limit>[, <PL_limit8psk>]]

In case of: <PL_mode>=0
^SCFG: "Radio/Mtpl", <PL_mode>

In case of: <PL_mode>=1 and <PL_profile>
^SCFG: "Radio/Mtpl", <PL_mode>, <PL_profile>

In case of: <PL_mode>=2 and <PL_profile> one profile configuration is printed out
^SCFG: "Radio/Mtpl", <PL_mode>, <PL_profile>, <rba>, <PL_limit>[, <PL_limit8psk>]
^SCFG: ["Radio/Mtpl", <PL_mode>, <PL_profile>, <rba>, <PL_limit>[, <PL_limit8psk>]]
^SCFG: ["Radio/Mtpl", ...]

In case of: <PL_mode>=2 full profile configuration (1-8) is printed out

Write Command (Continued)

Instant Power Limitation for SAR Reduction and Thermal Mitigation

AT^SCFG="Radio/Mtpl"[, <PL_mode>[, <PL_profile>, <rba>, <PL_limit>[, <PL_limit8psk>]]]

Response(s)

^SCFG: "Radio/Mtpl", <PL_mode>, <PL_profile>, <rba>, <PL_limit>[, <PL_limit8psk>]
^SCFG: ["Radio/Mtpl", <PL_mode>, <PL_profile>, <rba>, <PL_limit>[, <PL_limit8psk>]]
^SCFG: ["Radio/Mtpl", <PL_mode>, <PL_profile>, <rba>, <PL_limit>[, <PL_limit8psk>]]
^SCFG: ["Radio/Mtpl", ...]

In case of: <PL_mode>=3 and <PL_profile>, <rba>,<PL_limit>[,<PL_limit8psk>] only the enabled profile is printed out
^SCFG: "Radio/Mtpl", <PL_mode>[, <PL_profile>]
OK
ERROR
+CME ERROR: <err>

Write Command

Radio output power reduction

AT^SCFG="Radio/OutputPowerReduction"[, <ropr>]

Response(s)

^SCFG: "Radio/OutputPowerReduction", <ropr>
OK
ERROR
+CME ERROR: <err>

Write Command

Configure allocation of serial interfaces:

AT^SCFG="Serial/Interface/Allocation"[, <reqSerialIfcAlloc>]

Response(s)

^SCFG: "Serial/Ifc", <curSerialIfcAlloc>, <reqSerialIfcAlloc>
OK
ERROR
+CME ERROR: <err>

Write Command

USB Device Descriptor:

AT^SCFG="Serial/USB/DDD" [, <deviceDescr>, [<descrIndex>], [<langId>], <vendorId>, <productId>, [<manufacturer>], [<product>], [<serialNo>]]

Response(s)

^SCFG: "Serial/USB/DDD" , <deviceDescr>, <descrIndex>, <langId>, <vendorId>, <productId>, <manufacturer>, <product>, <serialNo>
OK
ERROR
+CME ERROR: <err>

Write Command

Configuration of TCP parameter 'InitialRetransmissionTimeout':

AT^SCFG="Tcp/IRT"[, <tcpIrt>]

Response(s)

^SCFG: "Tcp/IRT", <tcpIrt>
OK
ERROR
+CME ERROR: <err>

Write Command

Configuration of TCP parameter 'MaxRetransmissions':

AT^SCFG="Tcp/MR"[, <tcpMr>]

Response(s)

^SCFG: "Tcp/MR", <tcpMr>
OK
ERROR
+CME ERROR: <err>

Write Command

Configuration of TCP parameter 'OverallTimeout':

AT^SCFG="Tcp/OT"[, <tcpOt>]

Response(s)

^SCFG: "Tcp/OT", <tcpOt>
OK
ERROR
+CME ERROR: <err>

Write Command

Configuration of Internet Service URCs:

AT^SCFG="Tcp/WithURCs"[, <tcpWithUrc>]

Response(s)

^SCFG: "Tcp/WithURCs", <tcpWithUrc>
OK
ERROR
+CME ERROR: <err>

Write Command

Tracing:

AT^SCFG="Trace/Syslog/OTAP"[, <otapTracer>][, <uwDevice>[, <intvalue>][, <filename>][, <logmode>]][, <blockmode>]

Response(s)

^SCFG: "Trace/Syslog/OTAP", <otapTracer>[, <uwDevice>[, <intvalue>][, <filename>][, <logmode>][, <blockmode>]]
SYSLOG ENABLED
OK
ERROR
+CME ERROR: <err>

Write Command

Subcommand controls the behaviour of the RING line if it is selected for URC signalization.

AT^SCFG="URC/Ringline"[, <urcRinglineCfg>]

Response(s)

^SCFG: "URC/Ringline", <urcRinglineCfg>
OK
ERROR
+CME ERROR: <err>

Write Command

Subcommand controls duration of active RING line if it is selected for URC signalization.

AT^SCFG="URC/Ringline/ActiveTime"[, <urcRinglineDuration>]

Response(s)

^SCFG: "URC/Ringline/ActiveTime", <urcRinglineDuration>
OK

Write Command (Continued)

Subcommand controls duration of active RING line if it is selected for URC signalization.

AT^SCFG="URC/Ringline/ActiveTime"[, <urcRinglineDuration>]

Response(s)

ERROR
+CME ERROR: <err>

Write Command

Userware autostart status:

AT^SCFG="Userware/Autostart"[, <upwd>, <ua>]

Response(s)

^SCFG: "Userware/Autostart"[, <ua>]
OK
ERROR
+CME ERROR: <err>

Write Command

Userware autostart delay:

AT^SCFG="Userware/Autostart/Delay"[, <upwd>, <uad>]

Response(s)

^SCFG: "Userware/Autostart/Delay"[, <uad>]
OK
ERROR
+CME ERROR: <err>

Write Command

Userware debug interface:

AT^SCFG="Userware/DebugInterface"[, <udbgif1>, <udbgif2>[, <udbgif3>]]

Response(s)

^SCFG: "Userware/DebugInterface", <udbgif1>, <udbgif2>, <udbgif3>
OK
ERROR
+CME ERROR: <err>

Write Command

AT^SCFG="Userware/DebugMode"[, <userwaremode>]

Response(s)

^SCFG: "Userware/DebugMode"[, <userwaremode>]

Write Command

Userware configuration password:

AT^SCFG="Userware/Passwd"[, $<upwd>_{old}$, $<upwd>_{new}$, $<upwd>_{new}$]

Response(s)

^SCFG: "Userware/Passwd"
OK
ERROR
+CME ERROR: <err>

Write Command

Standard output of userware:

AT^SCFG="Userware/Stdout"[, <uwDevice>[, <intvalue>][, <filename>][, <logmode>]][, <blockmode>]

Response(s)

^SCFG: "Userware/Stdout" , <uwDevice>[, <intvalue>[, <filename>[, <logmode>]]], <blockmode>
OK
ERROR
+CME ERROR: <err>

Write Command

Watchdog configuration and control:

AT^SCFG="Userware/Watchdog"[, <wd>]

Response(s)

^SCFG: "Watchdog", <wd>
OK
ERROR
+CME ERROR: <err>

PIN	✈	Last
-	±	-

Parameter Description

<al>(str)

Audio Loop Setting

This parameter can be used to configure an audio loop for performing a simple verification of audio connections. The feature is intended for testing only.
Neither a USIM nor a mobile network is necessary to turn the audio loop on. Audio mode can be selected via AT command AT^SNFS. Audio path can be selected via AT command AT^SAIC.
In audio loop mode, don't try to change any audio settings (even though changes are accepted) such as interface, mode, volume etc. If you want to change these settings, do it before you turn on the audio loop.

"0"(P)	No audio loop active
"1"	Audio loop active

<acktimeout>(str)

eCall ACK timeout in milliseconds

The ACK timer waits for receipt of two AL-ACKs after two LL-ACKs are received.

0...5000(P)...2147483646

<callback>(str)

eCall callback switch

Command switch that enables or disables the Inband modem for a mobile terminated voice call. The call is accepted by ATA as usual. In this case the Inband modem always starts in PULL mode for the mobile terminated call as opposed to PUSH mode if originating a call with AT+CECALL. In PULL mode the Inband modem remains in listening state until PSAP calls for a data phase by sending START messages. The URC indicator flow is compatible to the flow during an originating call apart from the "+CIEV:ecallco,2" that appears on PSAP requests only. If the user did not update the modem data the old MSD is taken during a data phase. While the eCall Inband modem communication with the PSAP (e.g., transfer MSD) is in progress the voice channel is muted.

"0"(P)	Disable Inband modem
"1"	Enable Inband modem on mobile terminated call

<callbacktimeout>(str)(NV)

eCall callback timeout in milliseconds

This setting will take effect only after restarting the module.
Input values may be rounded down to the nearest second (e.g. input value "2999999" becomes "2999000" in read command response.

0...43200000(D)...2147483646

<msd>(str)

Minimum Set of Data for eCall

This parameter sets the Minimum Set of Data (MSD) for eCalls.
The data needs to be specified as hexadecimal encoded string, e.g. "1A13F3". The maximal length of the string is 280 characters (140 bytes). If the content is shorter, the string will be padded with zeros. Powerup default is a string of zeros.

<pullmode>(str)

Command switch is required for ERA-GLONASS only. The switch restarts the ERA-GLONASS modem in PULL mode, i.e., to re-establish the eCall without the usual startup phase for outgoing calls. This may be required if a previous eCall was dropped after the MSD was transmitted successfully. The setting has to be done before the eCall and will be set automatically back to default after the eCall is released.

“0“(P)	Disable pull mode.
“1“	Enable pull mode.

<sessiontimeout>(str)

eCall session timeout in milliseconds

The session timeout aborts the MSD transmission; the session timer starts when the eCall modem begins to transmit (i.e., SF) and stops when the MSD is successfully transmitted (at least two LL-ACKs received).

0...20000(P)...2147483646

<starttimeout>(str)

eCall start timeout in milliseconds

The start timer awaits start signal; it starts when the eCall emergency setup is executed and stops when three valid, consecutive SF and start messages are received.

0...5000(P)...2147483646

<ecc>(str)(+CSCS)(NV)

Emergency call numbers on non-ECC USIM

This parameter specifies emergency call numbers on USIM without ECC field and with empty ECC field. The parameter has no influence on the commonly used emergency numbers 112 and 911 which are always supported.
Please refer also to Section 7.2, ATD where you can find a list of emergency call numbers supported if no USIM is inserted.
The value range of <ecc> is "0"..."255". To select or deselect an emergency number calculate the sum of the values of all desired numbers and use the resulting value. For example, for "08" (2) and "118" (8) please enter the value (10).
Parameter is global for the ME, non-volatile and will not be reset by AT&F.

“ 0“(D)	No additional emergency numbers
“ 1“	000
“ 2“	08
“ 4“	110

“ 8“	118
“16“	119
“32“	999
“64“	Reserved
“128“	Reserved
“255“	All additional emergency call numbers are supported.

<dormancy>(str)(NV)

Dormancy Mode

This parameter controls the Dormancy Mode.
Parameter is global for all interfaces, non-volatile and will not be reset by AT&F.
Changed setting will take effect only after restarting the module.

“0“(D)	Disable Dormancy Mode, i.e., the ME behaves as requested by the used USIM.
“1“	Enable Dormancy Mode.

<eCallUSIM>(str)

eCall USIM

This parameter provides the information if an eCall-Only-USIM ("eUSIM") is used.

“0“	eCall-Only-USIM not detected.
“1“	eCall-Only-USIM detected .

The user defined settings of Dormancy Mode are overruled by an eCall-Only-USIM. If Dormancy Mode is activated by the user, the ME behaves identical to the functionality as requested by an eCall-Only-USIM, meaning the ME will camp on the network in "eCall-Inactive-State" (see 3GPP TS 24.008) and will only register to a network for eCall execution.
If Dormancy Mode is activated (or an eCall-Only-USIM is used) when the eCall Callback Timer (see parameter <callbacktimeout>) expires (indicated by URC "+CIEV"="ecaller,5"), the module deregisters automatically from the network and returns to camping on the PLMN in the "eCall-Inactive-State".

<scc>(str)(NV)

Speech Codec

Speech Codec Configuration for voice calls
This parameter can be used to configure the speech version indications in the bearer capabilities in case of voice calls (see 3GPP TS 24.008). If you change this parameter the command returns "OK", a new setting takes effect the next time the UE is restarted (after power-cycle). Parameter is global for all interfaces, non-volatile and will not be reset by AT&F.

“0“(D)	All supported speech codecs are enabled for voice calls.
“1“	The speech codecs GSM HR, GSM HR AMR and GSM AMR are disabled for voice calls.

<g_mode>(str)(+CSCS)(NV)

Mode of operation for signal lines

This parameter can be used to configure shared signal lines of the EHS6-A module. Depending on the connected devices the setting determines the specific function assigned to the related signal line(s). Keep in mind that the functions assigned to shared lines are mutually exclusive. When a line is reserved for one interface, then the <g_mode> parameter is automatically set to 'rsv' for all other interfaces that use this line.
For example, to enable the SPI interface select AT^SCFG="GPIO/mode/SPI","std". This will automatically set AT^SCFG="GPIO/mode/DSR0","rsv" for DSR0 used as SPI_CLK line for SPI and AT^SCFG= "GPIO/mode/ASC1","rsv" for ASC1 (ASC1 lines used as SPI lines). At the same time this will lock the GPIO functionality of GPIO3, GPIO16, GPIO17, GPIO19.
To enable the DAI interface select AT^SCFG="GPIO/mode/DAI","std". This will lock the GPIO functionality of

GPIO20 - GPIO23. IMPORTANT: Audio commands offer full functionality only if the DAI is enabled with AT^SCFG="GPIO/mode/DAI","std". If DAI resources are not available then DAI dependent audio commands will respond "+CME ERROR: operation not allowed".
The changes will take effect after restart of the ME and are non-volatile.

“std“	Signal lines are assigned to this interface.
“gpio“	Signal lines are used as GPIO.
“rsv“	Signal lines are reserved by other interface. This value cannot be set by the AT^SCFG write command.

<gaa>(str)(+CSCS)(NV)

GPRS with AutoAttach

This parameter can be used to control whether the ME will perform a GPRS attach immediately after power-up and registering to the network or not. If the setting is changed to "enabled" and the ME is not attached yet, it will not initiate an attach immediately but after the next power-up and registration to the network.
If the setting is changed to "disabled" and there is no PDP context activated, the ME will detach automatically.
Parameter is global for all interfaces, non-volatile and will not be reset by AT&F.

“disabled“	GPRS auto attach is disabled
“enabled“(D)	GPRS auto attach is enabled

<cfun>(str)(NV)

CFUN Mode

Parameter can be used to enable or disable the non-volatile setting for <fun> of AT command AT+CFUN.

“0“(D)	Parameter setting for <fun> of AT command AT+CFUN is non-volatile. This mode can be used, for example, to configure the UE to enter Airplane mode each time after restart.
“1“	Parameter setting for <fun> of AT command AT+CFUN is volatile and changes are not restored after restart.

<cfun_save>(str)(NV)

Saved CFUN Mode

Reads the non-volatile setting of parameter <fun> of AT command AT+CFUN which will be used for next restart.

<manufacturer>(str)(NV)

Manufacturer name

Setting can be used to configure the name of the manufacturer which is displayed with the commands ATI and AT+CGMI. Maximal length of the Manufacturer name is 25 characters (or less if you use multibyte characters).

“Cinterion“(D)

<product>(str)(NV)

Product name

Setting can be used to configure the name of the product which is displayed with the commands ATI and AT+CGMM. Maximal length of the product name is 25 characters (or less if you use multibyte characters).

“EHS6-A“(D)

<fso>(str)(+CSCS)(NV)

Enable/disable fast switch off

This parameter configures a fast ME switch off, i.e., a shutdown without network deregistration. If enabled, the ME can be shut down without network deregistration by using either the AT command AT^SMSO or the hardware line FAST_SHTDWN. For further details please refer to [2].
Please take great care before changing the fast switch off mode. Factory setting is <fso>="0".
Parameter <fso> is global for all interfaces, non-volatile and will not be reset by AT&F.

"0"(D)	Fast ME switch off is disabled. AT^SMSO performs an orderly ME shutdown and issues the "^SHUTDOWN" URC. Triggering the FAST_SHTDWN line has no effect.
"1"	Fast ME switch off enabled. AT^SMSO performs the fast switch off and does not issue any reply, e.g., OK, ERROR or any "^SHUTDOWN" URC. Triggering the FAST_SHTDWN line will start the fast shutdown procedure.

<vthresh>(str)(NV)

Undervoltage threshold value

The undervoltage thresholds defined for BB domain are calculated for max. 400 mV voltage drops during transmit burst. Power supply sources for EHS6-A applications shall be designed to tolerate 400 mV voltage drops without crossing the lower limits of 3.3 V (BB). For EHS6-A applications operating at the limit of the allowed tolerance the default undervoltage threshold may be adapted by selecting a <vthresh> value.
New settings take effect after restart.

"-4"	3.10 V
"-3"	3.15 V
"-2"	3.20 V
"-1"	3.25 V
"0"(D)	3.30 V
"1"	3.35 V
"2"	3.40 V
"3"	3.45 V
"4"	3.50 V

<PowerSupplyDomain>(str)

Power Supply Domain

"0"	<vthresh> value applies to BB domain ($BATT+_{BB}$ line).

<vthresh_BB_curr>(str)

Current BB undervoltage threshold

"-4"	3.10 V
"-3"	3.15 V
"-2"	3.20 V
"-1"	3.25 V
"0"(D)	3.30 V
"1"	3.35 V
"2"	3.40 V
"3"	3.45 V
"4"	3.50 V

<vthresh_BB_request>(str)

BB undervoltage threshold after next restart

For values see <vthresh_BB_curr>.

<SoR mode>(str)(+CSCS)(NV)

Steering of roaming:

The parameter enables or disables the steering of roaming behaviour.
Changes will be active with next start of the ME.

“off“(D)	Steering of roaming is disabled
“on“	Steering of roaming is enabled for EHS6-A.

<rba>(str)(+CSCS)

Allowed radio band(s)

This parameter specifies the frequency band(s) the ME is allowed to use. The status of the USIM PIN authentication remains unchanged, eliminating the need to enter the USIM PIN again after the change.
The <rba> value to select resp. deselect radio bands can be either a single band value or a multiple band value as listed below.
If the selected value doesn't contain any GSM band the first valid GSM band, e.g. GSM900 (+1), is added automatically. Likewise, if the selected value doesn't contain any WCDMA band the first valid WCDMA band, e.g. WCDMA 2100 BC1 (+16), is added.
Parameter <rba> is global for the ME, non-volatile and will not be reset by AT&F. AT^SCFG="Radio/Band" write command can be executed only on one interface at the same time. Otherwise AT^SCFG="Radio/Band" write command will respond "+CME ERROR: operation not allowed".

“1“	GSM 900 MHz
“2“	GSM 1800 MHz
“4“	GSM 1900 MHz
“8“	GSM 850 MHz
“16“	WCDMA 2100 (BC1)
“32“	WCDMA 1900 (BC2)
“64“	WCDMA 850 (BC5)
“128“	WCDMA 900 (BC8)
“256“	WCDMA 800 (BC6)

<ropr>(str)(+CSCS)(NV)

Radio Output Power Reduction

For GPRS and EGPRS multislot scenarios, the module reduces its output power according to 3GPP 45.005 section 4.1.1.
The amount of output power reduction (i.e. the used power profile) is controllable via AT command using "AT^SCFG=Radio/OutputPowerReduction".
The configuration is stored non-volatile.
The new power setting will be read after next power up.

“0“	No power reduction with GMSK and 8PSK - i.e. power profile 3 for GMSK and 8PSK
“1“	2 dB power reduction with GMSK (with 4 Tx), no power reduction for 8PSK - i.e. power profile 2 for GMSK and power profile 3 for 8PSK
“2“	4 dB power reduction with GMSK (with 4 Tx), no power reduction for 8PSK - i.e. power profile 1 for GMSK and power profile 3 for 8PSK

“3“	6 dB power reduction with GMSK (with 4 Tx), no power reduction for 8PSK - i.e. power profile 0 for GMSK and power profile 3 for 8PSK
“4“(D)	Max. power reduction for GSMK and 8PSK (6dB for 4 Tx) - i.e. power profile 0 for GMSK and 8PSK

<tcpIrt>(str)(+CSCS)(NV)

Initial Retransmission Timeout (IRT)

1...3(D)...60	This parameter determines the time (in seconds) the TCP/IP stack will wait before starting the first retransmission of packets during the initial connection establishment phase. The TCP protocol ensures the retransmission of packets several times at increasing intervals until some upper limit is reached. This mechanism prevents packet loss and serious congestion problems. In addition, the parameters <tcpMr> and <tcpOt> can be set to further optimize this mechanism for special conditions depending on the mobile network. Parameter is global for the ME and non-volatile. Use of default value is recommended. If changed the new value takes effect the next time you

<tcpMr>(str)(+CSCS)(NV)

Maximum Number of Retransmissions (MR)

1...10(D)...30	This parameter determines the maximum number of times to retransmit TCP packets. The value set with <tcpMr> will be assumed as default for the <srvParmTag> "tcpMR" when a new service profile is created with AT^SISS. In each service profile, you can set another "tcpMR" value which has precedence over the global value set with AT^SCFG. Existing service profiles are not affected when you change the global value via AT^SCFG. Parameter is global for the ME and non-volatile. Use of default value is recommended.

<tcpOt>(str)(+CSCS)

Overall TCP Timer for outstanding connections (tcpOT)

1...6000(D)	This parameter specifies the number of seconds to wait before closing a connection if TCP/IP packets are not acknowledged. Setting the maximum value is practically equivalent to deactivating the tcpOT mechanism because the maximum time would never be reached by the TCP/IP stack. The value set with <tcpOt> will be assumed as default for the <srvParmTag> "tcpOT" when a new service profile is created with AT^SISS. However, in each service profile, you can set another "tcpOT" value which has precedence over the global value set with AT^SCFG. Existing service profiles are not affected when you change the global value via AT^SCFG. Parameter is non-volatile. Use of default value is recommended.

<tcpWithUrc>(str)(+CSCS)(NV)

URC mode or polling mode for Internet service commands

This parameter enables or disables the presentation of the following URCs related to Internet service commands: "^SISR" URC, "^SISW" URC and "^SIS" URC for parameter <urcCause>=0 (Internet service events). "^SIS" URCs with <urcCause>=1 or 2 used to indicate incoming Socket connections are always enabled.
Parameter is global for the ME and non-volatile.

“on“(D)	Enable URCs related to Internet service commands. Throughout the Chapter "Internet Service AT Commands" the mode is also referred to as URC mode.

“off“	Disable URCs related to Internet service commands. This requires the TE to employ polling techniques when using the Internet service AT commands: The TE is responsible to retrieve all status information needed to control an Internet session. The method is referred to as polling mode.

`<otapTracer>`(str)(+CSCS)

OTAP tracer

This parameter enables a trace output of the Over The Air procedure. The tracer is useful for obtaining additional information when setting up an OTAP scenario. The output is provided on the interface configured with `<uwDevice>` (given `<uwDevice>` has to differ from currently used one) or if omitted (for compatibility reason only) on the interface on which the command was entered. While the tracer is enabled the interface is used for trace output only, meaning that no AT commands can be entered. The tracer will be switched off only by a reset of the ME, e.g. after a completed OTAP procedure or if disabled by setting parameter to "0".

“0“	Disable OTAP tracer.
“1“	Enable OTAP tracer.

`<curSerialIfcAlloc>`(str)(+CSCS)(NV)

Current Serial Interface Allocation

Parameter shows the current allocation of the serial interfaces. Configuration may be overwritten by the GPIO configuration done by the AT^SCFG parameters "GPIO/mode/...".

“0“(D)	AT commands are usable on ASC0, USB[0345] and USB-HSI[012]; USB1 and USB2 are reserved for tracing by Gemalto M2M GmbH. USB6 is unavailable. Note: This mode is set by default giving you the flexibility to connect to ASC0, USB and HSIC when starting the ME the very first time. However, in order to save power, it is not recommended to employ USB and HSIC in parallel. Therefore, for final application design, we recommend to set either mode 1, 2 or 3.
“1“	AT commands are usable on ASC0, ASC1 and USB[0345]. USB1 and USB2 are reserved for tracing by Gemalto M2M GmbH. USB6 is unavailable.
“2“	AT commands are usable on ASC0 and USB[01345]; ASC1 and USB2 are reserved for tracing by Gemalto M2M GmbH. USB6 is unavailable.
“3“	AT commands are usable on ASC0 and USB-HSI[012]. USB1 and USB2 are reserved for tracing by Gemalto M2M GmbH. USB6 is unavailable.

`<reqSerialIfcAlloc>`(str)(+CSCS)

Requested Serial Interface Allocation

Parameter allows to configure the allocation of the serial interfaces. On powerup the requested configuration is the same as the current configuration. If the requested configuration becomes different to the current configuration, then it becomes active after restart.

“0“	AT commands are usable on ASC0, USB[0345] and USB-HSI[012]. USB1 and USB2 are reserved for tracing by Gemalto M2M GmbH. USB6 is unavailable. Not recommended for final application design (see `<curSerialIfcAlloc>` above.
“1“	AT commands are usable on ASC0, ASC1 and USB[0345]; USB1 and USB2 are reserved for tracing by Gemalto M2M GmbH. USB6 is unavailable.
“2“	AT commands are usable on ASC0 and USB[01345]; ASC1 and USB2 are reserved for tracing by Gemalto M2M GmbH. USB6 is unavailable.
“3“	AT commands are usable on ASC0 and USB-HSI[012]. USB1 is reserved for tracing by Gemalto M2M GmbH. USB6 is unavailable.

<deviceDescr>(str)(+CSCS)(NV)

Device Descriptor

This parameter determines whether to use the ME's standard USB Device Descriptor configuration (default) or a Device Descriptor configuration customized by the Customer Application manufacturer.
Parameter is global, stored non-volatile in ME and not reset by AT&F. Setting takes effect after next USB interface enumeration.

"0"(D)	Standard USB Device Descriptor of the ME. If <deviceDescr>=0 is set all other parameters related to "Serial/USB/DDD" cannot be changed. For use in a Windows environment, the "usbmodem.inf" file delivered with EHS6-A shall be present. Note that whenever the EHS6-A firmware is updated over the USB interface the ME's standard configuration must be present. Therefore, before starting a EHS6-A firmware download be sure that <deviceDescr>=0 is activated and, under Windows, the ME's "usbmodem.inf" file can be found. Remember to restart the ME after reverting to <deviceDescr>=0 and before starting the firmware download.
"1"	Customer specific USB Device Descriptor. If <deviceDescr>=1 is set all other parameters related to "Serial/USB/DDD" can be changed. Customizing the USB Device Descriptor configuration requires a unique Vendor ID obtained from the USB Implementers Forum. For information please refer to http://www.usb.org. For use under Windows a customized INF file for the USB modem must be present. An easy way to create this file is copying the ME's "usbmodem.inf" file and overwriting the equivalent values changed with AT^SCFG, usually at least the Vendor ID, Product ID and, optionally, the manufacturer string. This is because the strings given for the customized "Serial/USB/DDD" parameters must be identical with those contained in the INF file.

<descrIndex>(str)(+CSCS)(NV)

Descriptor Index

"0"(D)	Not to be changed. Use always 0.

<langId>(str)(+CSCS)(NV)

Language ID

Language ID as defined by USB.ORG [49]. Parameter shall be given in HEX format, maximum 4 characters. EHS6-A supports only language ID "0409" (English) which cannot be changed.

<vendorId>(str)(+CSCS)(NV)

Vendor ID

This parameter represents the Vendor ID obtained from the USB Implementers Forum. The Vendor ID will, together with the Product ID, be transmitted to the host during USB enumeration. The given Vendor ID must be included in the INF file needed for Windows.
Parameter is global, stored non-volatile in ME and not reset by AT&F. Setting will be active after EHS6-A restart.
Parameter shall be given in HEX format, maximum 4 characters.
Please note that this parameter is effective only if the customized Device Descriptor <deviceDescr>=1 is enabled.

<productId>(str)(+CSCS)(NV)

Product ID

Product ID (PID) defined by the Customer Application manufacturer to identify the USB device.
The Product ID will, together with the Vendor ID, be transmitted to the host during USB enumeration. The given Product ID must be included in the INF file needed for Windows.
Parameter is global, stored non-volatile in ME and not reset by AT&F. Setting will be active after EHS6-A restart.
Parameter shall be given in HEX format, maximum 4 characters.
Please note that this parameter is effective only if the customized Device Descriptor <deviceDescr>=1 is enabled.

<manufacturer>(str)(+CSCS)(NV)

Manufacturer name

Optional manufacturer string defined by the Customer Application manufacturer. If specified with <manufacturer> the same string shall be included in the INF file needed for Windows.
Parameter is global, stored non-volatile in ME and not reset by AT&F. Setting takes effect after next USB interface enumeration.
Parameter length: maximum 63 characters.
Please note that this parameter is effective only if the customized Device Descriptor <deviceDescr>=1 is enabled.

<product>(str)(+CSCS)(NV)

Product string

Optional product name defined by the Customer Application manufacturer. If specified with <product> it is recommended to include the same string into the INF file.
Parameter is global, stored non-volatile in ME and not reset by AT&F. Setting takes effect after next USB interface enumeration.
Parameter length: maximum 63 characters.
Please note that this parameter is effective only if the customized Device Descriptor <deviceDescr>=1 is enabled.

<serialNo>(str)(+CSCS)(NV)

Device's serial number

Optional serial number. Empty string if not used, like in the case of the ME'S standard USB Device Descriptor configuration.
A serial number has several advantages. For example, it enables the host to assign the same virtual COM port to same USB device even though the device is connected to another USB port. This eliminates the need for the host to load the driver again.
Parameter is global, stored non-volatile in ME and not reset by AT&F. Setting takes effect after next USB interface enumeration. If parameter <serialNo> is not specified, the default value of ME's standard USB Device Descriptor applies.
Parameter length: maximum 4 characters.
Please note that this parameter is effective only if the customized Device Descriptor <deviceDescr>=1 is enabled.

<urcRinglineCfg>(str)(+CSCS)(NV)

Parameter specifies the ring line to be used for signaling URCs both for idle interface and while interface is reserved, i.e. while busy on AT command execution or data transmission.
This functionality serves to fine-tune the conditions under which the ME signals service request to the TE.
For details about URC presentation refer to Section 1.9, Unsolicited Result Code Presentation.
For details on using the RING0 line to wake up the TE refer to "EHS6-A Hardware Interface Description, Version 03.001".
Setting is local for every interface.

“off“	URCs are not indicated by a ring line. This applies also when "off" is set on the ASC0 interface, and at the same time other USB ports may be set to "off" or "local" (but not "asc0").
“local“(D)	URCs are indicated by an activated ring line on the same interface where the URC appears.
“asc0“	URCs are indicated by activated RING0 line of the ASC0 interface (low active).

<urcRinglineDuration>(str)(+CSCS)(NV)

This parameter determines how long the ring line is activated in order to indicate a URC. For details about URC presentation refer to Section 1.9, Unsolicited Result Code Presentation. For more information on the RING0 line and its timing for different types of URCs please refer to "EHS6-A Hardware Interface Description, Version 03.001". <urcRinglineDuration> is applicable to all types of URCs except the RING URC. The timing of the RING URC (incoming calls) is not configurable by AT command.
The type of ring line used for URC indication depends on parameter <urcRinglineCfg>.
This functionality serves to fine-tune the conditions under which the ME signals service request to the TE.
Setting is global for all interfaces.

“0“	RING line will be activated for a time between 4.6 and 9.2 ms (followed by a pause for about 2.9s).
“1“	RING line will be activated for about 100ms (followed by a pause for about 2.9s).
“2“(D)	RING line will be activated for about 1s (followed by a pause for about 2s).

<ua>(str)(+CSCS)(NV)

Userware Autostart

Specifies if the userware is started automatically on power-up.
If the Userware application starts, all current calls will be terminated.
Parameter is global, stored non-volatile in ME and not reset by AT&F.

“0“	Userware autostart disabled
“1“(D)	Userware autostart enabled

<uad>(str)(+CSCS)(NV)

Userware Autostart Delay

0(D)...10000	Specifies the delay time (in 100ms) when the userware is started automatically after power-up. Parameter is global, stored non-volatile in ME and not reset by AT&F.

<userwaremode>(str)(+CSCS)(NV)

Userware DebugMode

Enable or disable the Userware Debug.
Parameter is global, stored non-volatile in ME and not reset by AT&F.
Switching to new debug mode will cause the module automatically restart, so that the new setting will take effect.

"off"(D)	disable Debugging
"on"	enable debugging

<upwd>(str)(+CSCS)(NV)

Userware Password

Password used to change values of userware parameters.
Parameter is global, stored non-volatile in ME and not reset by AT&F.
The maximum length of a given password is 8 characters. It is allowed to have an empty password (this is the value on delivery of the ME).
Parameter must be enclosed in quotation marks, regardless whether the password is given or empty. See example below.
CAUTION: Be careful not to lose the password. There is no way to reset or recover a forgotten password or to obtain a new password from the manufacturer.

<udbgif1>(str)(+CSCS)

Userware Debug Interface Local IP address

Local IP address of the ME used by the userware debugger.
Parameter is global, volatile and not reset by AT&F.

<udbgif2>(str)(+CSCS)

Userware Debug Interface Remote IP address

IP address of the host running the userware debugger.
Parameter is global, volatile and not reset by AT&F.

<udbgif3>(str)(+CSCS)

Default interface flag for IP connections

Flag to select if the userware debug interface is the default interface for IP connections. Parameter is global, volatile and not reset by AT&F.

["0"]	Debug interface is not the default.
"1"	Debug interface is default for IP connections.

<uwDevice>(str)(+CSCS)(NV)

Userware output device

Parameter specifies the device to be used by the userware's standard output "System.out". The selected device must be supported by the hardware.

"NULL"(D)	Discard output data.
"ASC0"	Output of "System.out" is routed to the first serial interface. The interface is shared between internal "CommConnection" and "System.out". The baud rate set for "CommConnection" applies also to "System.out".
"ASC1"	Output of "System.out" is routed to the second serial interface. The interface is shared between internal "CommConnection" and "System.out". The baud rate set for "CommConnection" applies also to "System.out".

“USB“	Output of "System.out" is routed to the Universal Serial Bus interface.
“USB1“	Output of "System.out" is routed to the Universal Serial Bus interface 1.
“USB2“	Output of "System.out" is routed to the Universal Serial Bus interface 2.
“USB3“	Output of "System.out" is routed to the Universal Serial Bus interface 3.
“USB4“	Output of "System.out" is routed to the Universal Serial Bus interface 4.
“USB5“	Output of "System.out" is routed to the Universal Serial Bus interface 5.
“UDP“	Output of "System.out" is routed to a UDP socket. The parameter requires that the port number be given with <intvalue>. "UDP" is intended only for use with the Userware IDE and will be set automatically each time you start the debugging emulator of the EHS6-A (on-device debugging). Closing the debugger causes the ME to reboot and automatically resets the <uwDevice> value last selected. This eliminates any need for manually setting "UDP" with AT^SCFG, and, besides, allows you to select another "System.out" target to be used when not debugging. Due to this, the value "UDP" is volatile unlike all other <uwDevice> values, and switching to "UDP" is not supported while Userware is running.
“FILE“	Output of "System.out" is written into a file. Requires additional parameters <intvalue>, <filename> and <logmode>. Because excessive writing to the ME's flash file system decreases the life time of the flash memory, it is recommended to use the "FILE" device only during development phases.
“SYSTEM“	For internal use only.

<intvalue>(str)(+CSCS)(NV)

This parameter is required only if parameter <uwDevice> for the Userware "System.out" is set to "UDP" or "FILE". Parameter is global, stored non-volatile in ME and not reset by AT&F.

1...65535	If <uwDevice>= "UDP": UDP port number. It is recommended to use a number greater than 1023. If <uwDevice>= "FILE": Size of the log file in bytes, values less than 1024 are not supported.

<filename>(str)(+CSCS)

This parameter is required only if parameter <uwDevice> for the Userware "System.out" is set to "FILE". It specifies the absolute path and the file name of the log. The local Flash File system is identified by: "A:", directory separator is "/" (002Fh).
The underline character "_" (005Fh) is not supported.
The log is split into two concatenated files, each using half of the entire log size set with parameter <intvalue>. Each file name consists of the name specified with parameter <filename> and the numeric extension "0" or "1" automatically appended, for example "a:/java/log.txt.0" for the first part of the log and "a:/java/log.txt.1" for the second part. When the first log file reaches half of the log size, the "System.out" is written to the second file. When the second file is used up, the ME starts to overwrite the first one.
Parameter is global, stored non-volatile in ME and not reset by AT&F.
Parameter length: maximum 125 characters.

<logmode>(str)(+CSCS)(NV)

This parameter is required only if parameter <uwDevice> for the Userware "System.out" is set to "FILE". The parameter selects the mode of writing "System.out" data to file.
Parameter is global, stored non-volatile in ME and not reset by AT&F.

“buffered“(D)	Uses a buffer and a timer and acts like a write cache.
“secure“	Writes all output data byte by byte to the file.

<blockmode>(str)(+CSCS)(NV)

The parameter defines, how the Stdout strings are truncated.
Parameter is global, stored non-volatile in ME and not reset by AT&F.

["off"](D)	Stdout strings are truncated if output device handling reaches its transmission capability.
"on"	Stdout strings are never truncated. If output device buffer is full, the Java VM is waiting until memory becomes free again. This handling may slow down the VM when a lot of outputs are created, even a full stop of the VM is possible, if the used device is in flow control. Please use this option very carefully, and never in a production environment.

<wd>(str)(+CSCS)(NV)

Watchdog configuration and control

This parameter is used to configure the watchdog behavior.
The action triggered by the watchdog takes place without regard of network registration, file system operation and other ongoing actions (hard reset).
Parameter is global for all interfaces, non-volatile and will not be reset by AT&F.

"0"(D)	Watchdog "do nothing". The watchdog has no effect.
"1"	Watchdog "re-start". The watchdog will reboot the system.
"2"	Watchdog "shutdown". The watchdog will switch off the system.

<PL_mode>(str)

Power Limitation Mode

This parameter can be used to set Instant Power Limitation for SAR Reduction and Thermal Mitigation for the ME. For an example on how to configure and enable instant power limitation see below *Example* section.

"0"(P)	Power limitation disabled (no further parameters are possible).
"1"	Power limitation enabled via <PL_profile> (only <PL_profile> parameter is mandatory).
"2"	Profile query (only <PL_profile> parameter is optional).
"3"	Profile configuration (all parameters are mandatory, except 8 PSK only for GSM band).

<PL_profile>(str)

Power Limitation Profile

This parameter is used to set the profile.

1...8	Number of profile.

<PL_limit>(str)

Power Limitation

This parameter is used to set the power limit.
Parameter is global for the ME, non-volatile and will not be reset by AT&F.
Setting takes effect after next restart.

18...33	Power limit value in dBm for GSM low bands.
18...30	Power limit value in dBm for GSM high bands.
18...24	Power limit value in dBm for WCDMA bands.

<PL_limit8psk>(str)

Power Limitation 8 PSK

This parameter is used to set the power limit 8 PSK.
Parameter is global for the ME, non-volatile and will not be reset by AT&F.
Setting takes effect after next restart.

18...27	Power limit value in dBm only for GSM 8 PSK low bands.
18...26	Power limit value in dBm only for GSM 8 PSK high bands.

Examples

EXAMPLE 1

Usage of "URC/Ringline":

```
AT+CSCS="GSM"                          Switch to GSM character set.
OK
AT^SCFG?                               Query all parameters.
...
^SCFG:"URC/Ringline","local"           URCs on this interface will be indicated by Ring line
                                       associated to the interface (e.g. RING0 for ASC0).
...
OK
AT^SCFG="URC/Ringline","asc0"
^SCFG:"URC/Ringline","asc0"            URCs on this interface will be indicated by an acti-
                                       vated RING0 no matter whether or not the ME-TE
                                       link is reserved.
OK
AT^SCFG="URC/Ringline","off"           Disable any Ring line indication for URCs on this
                                       interface.
^SCFG:"URC/Ringline","off"
OK
```

EXAMPLE 2

Usage of parameter <upwd> if no password was configured so far (password is empty):

```
AT^SCFG="Userware/Autostart","","1"    Correct password specification
^SCFG: "Userware/Autostart","1"
OK
AT^SCFG="Userware/Autostart",,"1"      Correct password specification
^SCFG: "Userware/Autostart","1"
OK
```

EXAMPLE 3

For Specific Absorption Rate (SAR) adaption and thermal mitigation the maximum allowed output power of the module can be instantly limited. The command AT^SCFG="Radio/Mtpl" allows to configure and read power limits individually by band and technology, but (for GSM) independently of the number of used timeslots.

Eight profiles for instant power limitation can be defined and stored non-volatile. A profile consists of a set of power limits, one power limit for each supported band per RAT. For GSM the specified power limit is related to one transmit timeslot. If two/three/four timeslots are used for transmission the specified power limit is reduced by 3 / 4.8 / 6 dB. Changing a profile's specific power limit is effective after module restart only. Activation and deactivation of a profile is immediately effective. The instant power limitation is volatile and is therefore always deactivated after a module restart.

The following example shows how to configure and enable instant power limitation:

AT^SCFG="Radio/Mtpl",3,1,16,23	Configuration of Profile_1: UMTS Band 1 with maximum RF output power limited to 23dBm.
^SCFG: "Radio/Mtpl","0"	^SCFG: "Radio/Mtpl","0" shows that instant power limitation is still disabled.
OK	
AT^SCFG="Radio/Mtpl",3,1,128,23	Configuration of Profile_1: UMTS Band 8 with maximum RF output power limited to 23dBm.
^SCFG: "Radio/Mtpl","0"	^SCFG: "Radio/Mtpl","0" shows that instant power limitation is still disabled.
OK	
AT+CFUN=1,1	Module restart to set and enable the configured Profile_1 settings configured above.
OK	
^SYSSTART	
AT^SCFG="Radio/Mtpl",2	Query of the current power limitation profile settings.
^SCFG: "Radio/Mtpl","2","1","1","33","27"	
^SCFG: "Radio/Mtpl","2","1","2","30","26"	
^SCFG: "Radio/Mtpl","2","1","4","30","26"	
^SCFG: "Radio/Mtpl","2","1","8","33","27"	
^SCFG: "Radio/Mtpl","2","1","16","*23*"	Profile_1 settings modified above are shown in italics.
^SCFG: "Radio/Mtpl","2","1","64","24"	
^SCFG: "Radio/Mtpl","2","1","128","*23*"	
^SCFG: "Radio/Mtpl","2","1","256","24"	
^SCFG: "Radio/Mtpl","2","2","1","33","27"	
^SCFG: "Radio/Mtpl","2","2","2","30","26"	
^SCFG: "Radio/Mtpl","2","2","4","30","26"	
...	
^SCFG: "Radio/Mtpl","2","8","128","24"	
^SCFG: "Radio/Mtpl","2","8","256","24"	
OK	
AT^SCFG="Radio/Mtpl",1,2	Activation of Profile_2 with default values, i.e. maximum RF output power = 24dBm
^SCFG: "Radio/Mtpl","1","2"	^SCFG: "Radio/Mtpl","1","2" shows that instant power limitation is now enabled with Profle_2.
OK	
AT^SCFG="Radio/Mtpl",1,1	Switch profiles and activate Profile_1, i.e. instant power limitation with a reduction of 1dBm in this case.
^SCFG: "Radio/Mtpl","1","1"	^SCFG: "Radio/Mtpl","1","1" shows that instant power limitation is now enabled with Profle_1.
OK	
AT^SCFG="Radio/Mtpl",0	Deactivate instant power limitation.
^SCFG: "Radio/Mtpl","0"	^SCFG: "Radio/Mtpl","0" shows that instant power limitation is now disabled.
OK	

2.13 AT^SPOW Set UART Mode and SLEEP Mode on UART

AT^SPOW enables or disables the ME's UART interfaces ASC0 and ASC1 and controls SLEEP mode on both interfaces. Parameter settings are non-volatile and common for all interfaces, but are not effective for USB.

If SLEEP mode is enabled (<mode>=2), CTS0 and CTS1 are periodically activated for the time set with <awake> enabling the ME to listen to paging messages from the base station. The AT interface is enabled during the active periods of CTS0/CTS1.
The inactive periods of CTS0/CTS1 (when power saving is effective) depend on the paging cycle of the base station and may vary between 0.47 - 2.12 seconds in GSM networks and 0.64 - 5.12 seconds in UMTS networks. This means that the TE should provide an equivalent timeout for trying to access the AT command interface.
SLEEP mode requires that CTS/RTS flow control be configured both on ME side (see AT\Q) and TE side.

If SLEEP mode is enabled on ASC0 and ASC1, keep in mind that the module's current consumption decreases only if USB is either disconnected at all, or in Suspend state with VUSB_IN line enabled.
Please refer to "EHS6-A Hardware Interface Description, Version 03.001" for more information on power saving.

Syntax

Test Command

```
AT^SPOW=?
```

Response(s)

```
^SPOW: (list of supported <mode>s), (time range of <timeout>), (time range of <awake>)
OK
ERROR
+CME ERROR: <err>
```

Read Command

```
AT^SPOW?
```

Response(s)

```
^SPOW: <mode>, <timeout>, <awake>
OK
ERROR
+CME ERROR: <err>
```

Write Command

```
AT^SPOW=<mode>, <timeout>, <awake>
```

Response(s)

```
OK
ERROR
+CME ERROR: <err>
```

PIN	✈	Last
-	+	-

Parameter Description

<mode>(num)(NV)	
0	UART interfaces ASC0 and ASC1 are deactivated to reduce power consumption. They can be activated again by changing <mode> from one of the USB AT command instances.
1	UART interfaces ASC0 and ASC1 are activated.
2(D)	UART interfaces ASC0 and ASC1 are in a power saving mode, i.e., in SLEEP mode.

<timeout>(num)(NV)	
0	Value 0 applies only to <mode>=0 or 1. Note that the AT^SPOW? read command response value of <awake> is always equal 0 when power saving is off.
3...1000(D)...65535	In SLEEP mode (<mode>=2), time in milliseconds the ME remains awake after the last sent character. Minimum value: 3 ms, recommended 1000 ms. <timeout> values below 3 are denied with ERROR. <timeout> value cannot be lower than <awake> value. If <timeout> is set to lower value than <awake> it will be automatically set to be equal <awake>.

<awake>(num)(NV)	
0	Value 0 applies only to <mode>=0 or 1. Note that the AT^SPOW? read command response value of <awake> is always equal 0 when power saving is off.
3(D)...255	In SLEEP mode (<mode>=2), active period of CTS0/CTS1 in milliseconds when ME is listening to paging messages from the base station and the AT command interface is enabled. Minimum and recommended value: 3 ms. Lower <awake> values are denied with ERROR. Setting a higher value is recommended only when the TE flow control is too slow.

3. Status Control Commands

The AT Commands described in this chapter allow the external application to obtain various status information from the EHS6-A.

3.1 AT+CEER Extended Error Report

AT+CEER returns an extended error report regarding the reason of the last

- call release
- failure to set up a call (both mobile originated or terminated)
- failure to modify a call by using Supplementary Services
- failed attempt to activate, register, query, deactivate or deregister a Supplementary Service
- unsuccessful Packet Domain attach or unsuccessful PDP context activation
- Packet Domain detach or PDP context deactivation

The extended error report consists of 1 line showing categorized error causes. Abbreviations used for these categories: CC = Call Control, SM = Session Management, SS = Supplementary Services.

Examples:
+CEER: "No report available"
+CEER: "CC setup error", 16, "Normal call clearing"
+CEER: "CC setup error",1,"Unassigned (unallocated) number"
+CEER: "SM detach",0,"No cause information available"

Syntax

Test Command

```
AT+CEER=?
```

Response(s)

```
OK
ERROR
+CME ERROR: <err>
```

Exec Command

```
AT+CEER
```

Response(s)

In case of CC and SM categories:

```
+CEER: <category>[, <cause>, <description>]
```

In case of SS category network error cause and network GSM cause:

```
+CEER: <category>, <cause>
```

In case of SS category network reject cause:

```
+CEER: <category>, <tag>, <cause>
OK
ERROR
+CME ERROR: <err>
```

Write Command

```
AT+CEER=<reset>
```

Response(s)

```
OK
ERROR
+CME ERROR
```

PIN	✈	Last
-	+	-

Reference(s)

3GPP TS 27.007 [44]
3GPP TS 24.008 [39]

Parameter Description

`<category>`(str)

Category given as one of the following strings:
"No report available"
"CC setup error"
"CC modification error"
"CC release"
"SM attach error"
"SM detach"
"SM activation error"
"SM deactivation"
"SS network error cause"
"SS network reject cause"
"SS network GSM cause"

`<cause>`(num)

Cause for last call release or error as number code. Sent by network or internally.

`<description>`(str)

Verbose string containing the textual representation of the cause.

`<tag>`(num)

Numeric value indicating an SS Reject code.

`<reset>`(num)

0	Reset the extended error report to initial value.

3.1.1 Release causes for L3 Call Control (CC)

See also 3GPP TS 24.008 [39], section 10.5.4.11 "Cause". All values greater than 255 are internal values.

<cause>	<description>
Normal class	
1	Unassigned (unallocated) number
3	No route to destination
6	Channel unacceptable
8	Operator determined barring
16	Normal call clearing
17	User busy
18	No user responding
19	User alerting, no answer
21	Call rejected

<cause>	<description>
22	Number changed
26	Non-selected user clearing
27	Destination out of order
28	Invalid number format (incomplete number)
29	Facility rejected
30	Response to STATUS ENQUIRY
31	Normal, unspecified
Resource unavailable class	
34	No circuit/channel available
38	Network out of order
41	Temporary failure
42	Switching equipment congestion
43	Access information discarded
44	Requested circuit/channel not available
47	Resource unavailable, unspecified
Service or option not available class	
49	Quality of service unavailable
50	Requested facility not subscribed
55	Incoming calls barred within the CUG
57	Bearer capability not authorized
58	Bearer capability not presently available
63	Service or option not available, unspecified
Service or option not implemented	
65	Bearer service not implemented
68	ACM equal or greater than ACM max
69	Requested facility not implemented
70	Only restricted digital information bearer capability is available
79	Service or option not implemented, unspecified
Invalid message (e.g. parameter out of range) class	
81	Invalid transaction identifier value
87	User not member of CUG
88	Incompatible destination
91	Invalid transit network selection
95	Semantically incorrect message
Protocol error (e.g. unknown message) class	
96	Invalid mandatory information
97	Message type non-existant or not implemented
98	Message type not comaptible with protocol state
99	Information element non-existent or not implemented
100	Conditional information element error
101	Message not compatible with protocol
102	Recovery on timer expiry

<cause>	<description>
111	Protocol error, unspecified
Interworking class	
127	Interworking, unspecified
212	APN resriction

3.1.2 Internal failure causes

<cause>	<description>
0	No cause information available
256	Internal, unspecified
257	Out of memory
258	Invalid parameters
259	Data call active
260	Speech call active
262	Missing ACM information
263	Temporary forbidden
264	Called party is blacklisted
265	Blacklist is full
266	No service
267	Limited service
268	Client conflict
269	Dual service call active
271	Unknown SIM error
274	Active Client is Gone
277	SIM status failure
278	Rejected by call control
279	FDN failed control
280	BDN failed control
283	CCBS possible
284	Invalid alternate service line
285	LND overflow
287	MM network failure unspecified
288	MM no service
289	MM access class barred
290	MM RR no resource
291	MM ME busy
292	MM unspecified
301	MMI not registered
303	Rejected by user
304	Rejected due to time out
306	Disconnected due to SIM-Toolkit call setup

<cause>	<description>
307	Pending SIM-Toolkit call setup
310	PSIM reset
340	MM sapi3 release
341	MM lower layer failure
342	MM authentification failure
343	MM PS reject
344	MM service rejected
345	MM abort by network
346	MM timeout
347	MM detach
348	MM RR connection release
349	MM not registered
350	MM reestablishment failure
351	Failure due to handover
352	Link establishment failure
353	Random access failure
354	Radio link aborted
355	Lower layer failure in Layer 1
356	Immediate Assignment Reject
357	Failure due to paging
358	Abnormal release, unspecified
359	Abnormal release, channel unacceptable
360	Abnormal release, timer expired
361	Abnormal release, no act on radio path
362	Pre-emptive release
363	UTRAN configuration unknown
364	Handover impossible, timing advance out of range
365	Channel mode unacceptable
366	Frequency not implemented
367	Originator leaving call group area
368	Lower layer failure from network
369	Call already cleared
370	Semantically incorrect message
371	Invalid mandatory info
372	Message type existing
373	Message type incompatible in state
374	Conditional information element error
375	No cell allocation available
376	Protocol error unspecified
377	Normal event
378	Unspecified
379	Preemptive release

<cause>	<description>
380	Congestion
381	RE establishment reject
382	Directed sig conn establishment
383	User inactivity
384	Lower layer failure downlink
385	Lower layer failure uplink
386	Cell barred due to authentication failure
387	signalling connection release
388	CS connection release triggered by MM
389	RRC connection establishment failure
390	RRC connection establishment reject with redirection
391	resource conflict
392	Layer 2 sequence error
393	Layer 2 T200 exp N200 plus 1 times
394	Layer 2 unsolicited DM resp MFES
395	Layer 2 contention resolution
396	Layer 2 normal cause
397	RR connection release due to BAND change (2G)
400	MM RR connection error while release
500	local user disconnect/normal call clearing
510	user or NW disconnect/normal call clearing,during any other call state than
511	Remote user/NW disconnected for call status is CALLPROCEEDING
512	Request rejected, BCM violation

3.1.3 Release causes for packet switched features

<cause>	<description>
103	Illegal MS
106	Illegal ME
107	GPRS service not allowed
112	Location area not allowed
113	Roaming not allowed in this location area
124	MBMS bearer capabilities insufficient for the service
125	LLC or SNDCP failure
126	Insufficient resources
128	Unknown PDP address or PDP type
129	User authentication failed
130	Activation rejected by GGSN
131	Activation reject,unspecified
132	Service not supported
133	Service not subscribed

<cause>	<description>
134	Service temporarily out of order
135	NSAPI already used
136	Regular PDP context deactivation
137	QoS not accepted
138	Network failure
139	Reactivation requested
140	Feature not supported
141	Semantic error in the TFT operation
142	Syntactical error in the TFT operation
143	Unknown PDP context
144	Semantic errors in packet filter(s)
145	Syntactical errors in packet filter(s)
146	PDP context without TFT already activated
148	Unspecified GPRS error
149	PDP authentication error

3.1.4 SS network reject causes

See also 3GPP TS 24.008 [39], section 3.6.7, tables 3.13, 3.14, 3.15, 3.16.

<tag>	<cause>	Meaning
General problem codes		
128	0	Unrecognized component
128	1	Mistyped component
128	2	Badly structured component
Invoke problem codes		
129	0	Duplicate invoke ID
129	1	Unrecognized operation
129	2	Mistyped parameter
129	3	Resource limitation
129	4	Initiating release
129	5	Unrecognized linked ID
129	6	Linked response unexpected
129	7	Unexpected linked operation
Return result problem codes		
130	0	Unrecognize invoke ID
130	1	Return result unexpected
130	2	Mistyped parameter
Return error problem codes		
131	0	Unrecognized invoke ID
131	1	Return error unexpected
131	2	Unrecognized error

<tag>	<cause>	Meaning
131	3	Unexpected error
131	4	Mistyped parameter
131	5	Unknown

3.1.5 SS network error causes

See also 3GPP TS 24.008 [39], section 4.5 except internal error 0 and 255.

<cause>	Meaning
0	MS_INT_SS_ERROR
1	Unknown subscriber
9	Illegal subscriber
10	Bearer service not provisioned
11	Teleservice not provisioned
12	Illegal equipment
13	Call barred
16	Illegal SS operation
17	SS error status
18	SS not available
19	SS subscription violation
20	SS incompatibility
21	Facility not supported
27	Absent subscriber
29	Short term denial
30	Long term denial
34	System failure
35	Data missing
36	Unexpected data value
37	PW registration failure
38	Negative PW check
43	Number of PW attempts violation
54	POS method failure
71	Unknown alphabet
72	USSD busy
121	Rejected by user
122	Rejected by network
123	Deflection to server subscribed
124	Special service code
125	Invalid deflected number
126	Max number of MPTY participants exceeded
127	Resources not available
255	MS_INT_SS_TIME_OUT

3.2 AT^SIND Extended Indicator Control

AT^SIND controls the presentation of indicator event URCs. You can enable or disable URCs to be issued by the EHS6-A each time the value of the related indicator changes, you can request the current status of all indicators, and you can also query the status of a single indicator.

Syntax

Test Command

```
AT^SIND=?
```

Response(s)

```
^SIND: (<indDescr>, list of supported <indValue>s)[, (<indDescr>, list of supported <indValue>s)[, ...]], (list of supported <mode>s)
OK
```

Read Command

```
AT^SIND?
```

Response(s)

```
^SIND: <indDescr>, <mode>[, <indValue>]
[^SIND: <indDescr>, <mode>[, <indValue>]]
...

In case of <indDescr>="eons"
^SIND: eons, <mode>, <indValue>, <eonsOperator>, <servProvider>

In case of <indDescr>="nitz"
^SIND: nitz, <mode>, <nitzUT>, <nitzTZ>, <nitzDST>

In case of <indDescr>="lsta"
^SIND: "lsta", <mode>, <lstaLevel>

In case of <indDescr>="dtmf"
^SIND: dtmf, <mode>, <dtmfSrc>, <dtmfSilenceTime>, <dtmfBufferTimeout>,
<dtmfMinToneTime>
OK
ERROR
+CME ERROR: <err>
```

Write Command

```
AT^SIND=<indDescr>, <mode>
```

Response(s)

```
^SIND: <indDescr>, <mode>[, <indValue>]

In case of: <indDescr>="eons" and <mode>=2
^SIND: <indDescr>, <mode>, <indValue>, <eonsOperator>, <servProvider>

In case of: <indDescr>="nitz" and <mode>=2
^SIND: <indDescr>, <mode>, <nitzUT>, <nitzTZ>, <nitzDST>

In case of: <indDescr>="dtmf" and <mode>=2
^SIND: "dtmf", <mode>[, <dtmfSrc>][, <dtmfSilenceTime>][, <dtmfBufferTimeout>][,
<dtmfMinToneTime>]
OK
ERROR
+CME ERROR: <err>
```

Write Command

AT^SIND="lsta", <mode>[, <lstaLevel>]

Response(s)

^SIND: "lsta", <mode>[, <lstaLevel>]
OK
ERROR
+CME ERROR: <err>

PIN ✈ Last
- + -

Unsolicited Result Codes

URC 1

Format of the standard indicator:

+CIEV: <indDescr>, <indValue>

Value of an indicator has changed.

URC 2

Format of the "simdata" indicator:

+CIEV: <indDescr>

This URC is issued indicating that the content of one or more USIM Elementary Files has been changed.

URC 3

Format of the "vmwait" indicator:

+CIEV: <indDescr>, <indValue>, <mwiVoice>, <mwiFax>, <mwiEmail>, <mwiOther>

The URC is issued after receiving an SMS with message waiting indicator included in User Data Header (UDH).

URC 4

Format of the "eons" indicator:

+CIEV: <indDescr>, <indValue>, <eonsOperator>, <servProvider>

One URC is issued for each new LAI (Location Area Information) broadcast by the network.

URC 5

Format of the "nitz" indicator:

+CIEV: <indDescr>, <nitzUT>, <nitzTZ>, <nitzDST>

URC 6

Format of the "lsta" indicator:
In case <indValue> equals "0" or <indValue> equals "2".

+CIEV: <indDescr>, <indValue>, <lstaEdvs>, <lstaRssi>

The URC is issued for every radio link error. It provides the error downcounter value corresponding to number of consecutive errors on downlink and the RSSI of the serving cell.
Error downcounter value of 11 corresponds to first error occurred on downlink, 0 corresponds to last before cell loss. If module retrieves registration after jamming disappears, this URC will also be issued once to indicate the recovery, with <lstaEdvs> set to 1.

URC 7

In case <indValue> equals "1".

+CIEV: <indDescr>, <indValue>, <lstaNo>, <lstaMin>, <lstaMax>, <lstaMean>, <lstaVar>

After the error downcounter reaches the value 0 the URC provides some statistic parameters of signal strength distribution across the band.

URC 8

Format of the "lsta" indicator:
In case <indValue> equals "10".

+CIEV: <indDescr>, <indValue>, <lstaDrxCount>, <lstaRscp>, <lstaNoise>, <lstaEcIo>

The URC is issued for every radio link failure. The radio link failure criterion is based on the radio link counter S. If module retrieves registration after jamming disappears, this URC will also be issued once to indicate the recovery, with <lstaDrxCount> set to 0.

URC 9

In case <indValue> equals "11".

+CIEV: <indDescr>, <indValue>, <lstaFrRep>, <lstaFrScnd>, <lstaFrStart>, <lstaFrEnd>, <lstaMin>, <lstaMax>, <lstaMean>, <lstaGrade>

After radio link loss the URC provides some statistic parameters of signal strength distribution across the band.

URC 10

Format of the "dtmf" indicator:

+CIEV: <indDescr>, <dtmfChar>

DTMF characters are enclosed in quotation marks "...". The URC is sent when the DTMF buffer is emptied. This is the case either when the buffer is full (max. 15 DTMF characters) or when the timeout specified with <dtmfBufferTimeout> expires. Refer to <indDescr>, "dtmf".

Parameter Description

<indDescr>(str)

This section describes <indDescr> values and their associated <indValue> ranges.
For command input on the AT^SIND write command line <indDescr> values are handled as string type. In responses and URCs <indDescr> values are output without quotation marks.

“service“	Service availability: 0 Not registered to any network. 1 Registered to home network or, if "roam"=1 then registered to another network.
“message“	Unread short message at memory location <mem1>. Refer to AT+CPMS. 0 No unread message(s) available. 1 Unread message(s) available.
“call“	Call in progress: 0 No call. 1 At least one MO or MT call is in state "active" (connection established).
“roam“	Roaming indicator: 0 Registered to home network or not registered. 1 Registered to other network.
“smsfull“	Capacity of storage for received short messages: 0 The short message memory location <mem3> is still free or has just become free again. Refer to AT+CPMS.

	1 All memory locations of <mem3> are used up.
“rssi“	Received signal (field) strength: 0 Signal strength ≤ -112 dBm 1 - 4 Signal strength in 15 dB steps 5 Signal strength ≥ -51 dBm 99 Signal strength not known or not detectable Received signal (field) strength can also be obtained with AT+CSQ. However, the signal strength is scaled to value range 0..31 by this command.
“simdata“	USIM notifies of changed Elementary File data: All data provided by the USIM is stored in one of many of its so-called Elementary Files. Be aware that this Elementary File data can be changed at any time by the network provider or an application running on the USIM. Therefore, a "+CIEV: "simdata"" URC is issued if USIM sent a SAT REFRESH command indicating that the content of one or more Elementary Files has been changed.
“vmwait“	Message Waiting Indication. Indicates new message(s) waiting included in User Data Header (UDH). 0 Value 0 notifies that no new voice, fax, mail, or other message is available, and is provided by the service center to clear the message indication after the subscriber has retrieved all messages. 1 Value 1 notifies the subscriber that the mailbox contains one or several messages. "vmwait" indicates the receipt of a special short message with a Message Waiting Indicator. The service must be provisioned by the operator. The presentation mode of the indicator varies with the operator: If more than one message are waiting, some operators only indicate the first one, others deliver the indicator each time a new message is put into the mailbox. After the subscriber has retrieved all messages the service center automatically sends another message indication which provides the value 0. Some operators may also send the number of waiting voice messages along with the indication. In this case, the number will be displayed by the EHS6-A as part of the URC. For example: "+CIEV: vmwait,1,3,0,0,0" notifies that three new voice messages are waiting. "+CIEV: vmwait,1,5,2,3,1" notifies that five new voice messages, two fax messages, three email messages and 1 other message are waiting. However, it should be noted that neither the read command AT^SIND? nor the write command AT^SIND=<mode>,2 display the number of waiting messages. The "vmwait" indicators do not apply if a network provider signals new voice mail(s), mail(s), fax or others via standard SMS. In this case the indicator "message" will be displayed.
“ciphcall“	Ciphering Status Change Indication: 0 Current call or SMS is not ciphered. 1 Current call or SMS is ciphered. As stated in GSM specifications 02.07 and 02.09 the ciphering indicator feature allows the EHS6-A to detect that ciphering is not switched on and to indicate this to the user. The URCs +CIEV: ciphcall,0 or +CIEV: ciphcall,1 will show up when: - a call is etablished, - ciphering status changes during a call, - an SMS is sent or received. The URC will not be printed when the connection is released. Read command AT^SIND? returns valid ciphering status only if a call is in progress or active. URC with ciphering status change indication appears only the interface on which URC indication was enabled using AT^SIND.

“eons“	Enhanced Operator Name String (EONS) Indication: The Enhanced Operator Name String indicator feature allows the EHS6-A to output various operator names for different PLMN identities via URC. It also allows the output of a different operator name based on a subset of the registered network by using a range of Location Area Codes (LACs) or a single LAC. The presentation of the "eons" indicator is determined by network activity. For example, the indicator appears every time a location update occurs or a NITZ information is sent, no matter whether or not the status of the EONS information has changed. This means that the same EONS information may be reported several times. The EONS tables are stored in the USIM and will be read at power-up. Following are the USIM Elementary Files that are affected by the introduction of EONS feature in the USIM: EF_{SST} (USIM Service Table) - describes which features are active. EF_{OPL} (Operator PLMN List) - contains the PLMN identification and location ID together with the index of the corresponding PNN record EF_{PNN} (PLMN Network Name) - contains the full and short form version of the network name for the registered PLMN If the Operator Name Source is CPHS Operator Name String long and short form, refer to <indValue>, the following two USIM Elementary Files will be used: $EF_{ONString}$ (Operator Name String) - contains the name of the PLMN operator who issued the USIM. $EF_{OPShort}$ (Operator Name Short form) - contains a short form of the name of the PLMN operator who issued the USIM.
“nitz“	Network Identity and Time Zone indication: This indicator shows the time relevant information elements of an MM Information (MMI) or GMM Information (GMMI) message received from the network (see 3GPP TS 24.008 [39], ch. 9.2.15a and 9.4.19). The network usually sends a NITZ indicator when the mobile attaches to the network, when it enters a location area with different time zone or when a daylight change occurs. A NITZ indicator may consist of the following parameters: Universal Time (UT), local Time Zone (TZ), Daylight Saving Time (DST). All information elements of MMI/GMMI are optional and therefore, the presentation of the parameters <nitzUT>, <nitzTZ>, <nitzDST> varies with the network. For example, the network may send all three parameters UT, TZ, DST, or only UT and TZ or only TZ. UT is indicated in usual date/time format and represents the current world time (GMT) at the moment when sent. TZ is given as a positive (east) or negative (west) offset from UT in units of 15 minutes. DST shows the number of hours added to the local TZ because of daylight saving time (summertime) adjustment. Usually DST is 1 hour but it can be also 2 hours in certain locations. Example for time and time zone with DST: +CIEV: nitz,"04/07/23,13:39:20",-28,1 In this example TZ is -28, showing a time offset of -7 hours (west) to Universal Time/GMT (which never changes for DST). DST is 1 which indicates that one hour was added to TZ because of Daylight Saving Time. If a network does not send the DST parameter the TZ value would be -32 (8 hours west) as would be done in winter: +CIEV: nitz,"04/11/23,13:39:20",-32 Please be aware that although the last NITZ value can be looked up again via "AT^SIND=nitz,2" the returned values may be out of date. Especially the UT value is obsolete because there is no internal NITZ clock and therefore no continuation of UT.

NITZ values are lost when the ME detaches from network. Also when a manual network selection fails and the ME automatically falls back to the previous network the NITZ values cannot be recalled. Nevertheless an indicated time zone is valid until a new MMI/GMMI will trigger another NITZ indication.

“psinfo“

Packet Switched Status Indication
"psinfo" indicates the status of the ME related to packet switched data calls. Please consider that some providers don't support the indication of HDSPA/HSUPA.

0 GPRS/EGPRS not available in currently used cell
1 GPRS available in currently used cell
2 GPRS attached
3 EGPRS available in currently used cell
4 EGPRS attached
5 camped on WCDMA cell
6 WCDMA PS attached
7 camped on HSDPA capable cell
8 PS attached in HSDPA capable cell
9 camped on HSDPA/HSUPA capable cell
10 PS attached in HSDPA/HSUPA capable cell

“lsta“

Link Stability Indication (for 2G)
The Link Stability indicator feature allows the EHS6-A to output radio link errors and statistic parameters of signal strength distribution across the band via URC.

0 Radio link error.
1 Radio link signal strength distribution.
2 Radio link error during voice call.

The presentation of the "lsta" indicator is determined by the radio link spectrum shape. For example, each time a radio link error appears the URC indicates an Error Downcounter value and the RSSI of the serving cell to provide some kind of warning. Every consecutive error decrements the Error Downcounter value and successful downlink signal reception resets it to start value of 11. The factor on which Error Downcounter is decremented depends on network settings. Error Downcounter value 0 means that the ME has lost the cell and will start the cell reselection process. In this case the URC is enhanced and includes the following statistic parameters of signal strength distribution across the band.
These are:
- Number of reported channels,
- Maximal signal strength value,
- Minimal signal strength value,
- Mean value of signal strength across frequency band and
- Variance of signal strength across frequency band.

To avoid that radio link error URCs are output too often, when radio conditions are bad, you can select a lower warning level with <lstaLevel>.

Link Stability Indication (for 3G)
URC's are issued for radio link quality and statistic parameters of signal strength distribution across the band.

10 Radio link quality.
11 Radio link signal strength distribution.

In idle mode S-Criteria of serving cell is evaluated each DRX (Discontinuous Reception) Cycle (64, 128, 256 or 512 frames).
If S-criteria is not met, Cell Reselection Evaluation Process is executed.
If the EHS6-A has not found any new suitable cell based on searches and measurements of the neighbor cells indicated in the measurement control system information for 12 seconds, the EHS6-A initiates cell selection procedures for the selected PLMN.
A DRX counter counts the consecutive DRX cycles that serving cell does not meet S-criteria during that 12 seconds. This is used for the URCs with <indValue> equals "10".

If ME has lost the cell and starts the cell reselection process an enhanced URC with <indValue> equals "11" will be output. It includes statistic parameters of signal strength distribution across the band similar to the URC with <indValue> equals "1" (for 2G).

“pacsp“

PLMN Mode Bit status Indication:
"pacsp" indicates the parsed PLMN Mode Bit value of the USIM Elementary File EF_{CSP} (Customer Service Profile) according to Common PCN Handset Specification (CPHS) [47].
0 CSP PLMN mode bit off
1 CSP PLMN mode bit on
99 CSP PLMN mode bit not defined or USIM Elementary File EF_{CSP} not accessible
The contents of the USIM Elementary File EF_{CSP} may be changed by the network in the background at any time via USIM Application Toolkit (USAT) procedure "Data download to USIM". For a detailed description please refer to 3GPP TS 11.14 [20], 3GPP TS 31.111 [21], ETSI TS 102 223 [22].
Please note, that URC presentation <mode> for this indicator is stored non-volatile.

“simtray“

Indication of USIM tray status as indicated by CCIN line. Result does not depend on whether the tray holds a USIM or not.
Generating a URC on status change is not supported.
0 USIM tray empty.
1 USIM tray plugged in.

“ecallda“

eCall Progress Indication
"ecallda" indicates the progress of an eCall. The progress status will be reset during startup of the eCall session.
0 No connection.
1 Sync detected.
2 ACK received.
3,<HLACK> HLACK received.

“ecallco“

eCall Vocoder Indication
"ecallco" indicates the connection between the eCall inband modem and the rx and tx path of the vocoder.
0 Inband modem is not connected, transmitting and receiving voice is possible.
1 Inband modem is connected to the rx path of the vocoder, transmitting and receiving voice is possible.
2 Inband modem is connected to the rx and tx path of the vocoder, transmitting and receiving voice is impossible.

“ecaller“

eCall Error Indication
"ecaller" indicates errors of the current eCall invocation. The error status will be reset during startup of the eCall session.
0 No error.
1 Timeout for receiving ACK, timer can be configured with AT^SCFG, <acktimeout>.
2 Timeout eCall start timer, timer can be configured with AT^SCFG, <starttimeout>.
3 Timeout eCall session timer, timer can be configured with AT^SCFG, <sessiontimeout>.
5 Timeout eCall callback timer, timer can be configured with AT^SCFG, <callbacktimeout>.
102 Indicates that the reliability of the received messages does not suffice for the message frames to be recognized as trustable confirmation for the MSD transfer, e.g., because of a poor connection.

“voiceprompt“

Reports status change of the audio handler for voiceprompts. This indication

corresponds with AT^SAFH command.
0 Audio handler is not active.
1 Playback of audio file started.
2 Recording of audio file started.

"dtmf" DTMF decoder.
AT^SIND "dtmf" can be used to configure a DTMF decoder capable of listening to remote downlink or local microphone samples. The decoder can be enabled/disabled on the fly, even within an ongoing call. Detecting DTMF signals from the local side is supported even in absence of a call.
The detected DTMF characters are buffered.
If enabled with parameter <mode>=1, the buffered DTMF characters are shown as "dtmf" URC when the DTMF buffer is emptied. The DTMF buffer is emptied either when full (max. 15 DTMF characters) or when the timeout specified with <dtmfBufferTimeout> expires.
Parameter <dtmfSrc> specifies whether to detect DTMF tones sent from a local source or via the network.
Parameter <dtmfSilenceTime> specifies the minimum silence time after which the ME is ready to detect the next valid DTMF character. The benefit of this parameter is to optimize the robustness of DTMF decoding versus data throughput.
Parameter <dtmfMinToneTime> specifies the minimum duration of a tone that can be detected as a DTMF character. All tones shorter than the value specified by this parameter will be ignored.

For use after restart, the presentation <mode> for this indicator can be stored to the user profile with AT&W. The same applies to <dtmfSrc> and to the time parameters (see below). AT&F restores the delivery defaults.

Example for a DTMF character train with 4 characters:
+CIEV: dtmf,"1*2#"
Example for a DTMF character train with the maximum of 15 characters:
+CIEV: dtmf,"004930311021A2B"
Example for a DTMF character train with a single character:
+CIEV: dtmf,"9"

<indValue>(num)

Integer type value in the range stated above for the corresponding <indDescr>.

Notes specific to the EONS feature:
If the indicator is "eons", the <indValue> is a type associated to the operator name according to 3GPP TS 22.101 [46]. This type depends on the source of the operator name.
Priority of types associated to the operator names is defined as follows (the type listed first has the highest priority). If a type cannot be indicated the next one will be used.
0 Not registered.
1 EF_{OPL} and EF_{PNN} (alphanumeric format, can contain up to 24 characters.)
2 Operator Name String in long and short format according to Common PCN Handset Specification (CPHS) [47] (alphanumeric format, can contain up to 16 characters).
3 Name information received by the NITZ service long and short form (alphanumeric format, can contain up to 16 characters). The short form will be displayed only if $EF_{OPShort}$ from CPHS is available.
4 Any operator name stored internal to the ME (alphanumeric format, can contain up to 16 characters).
5 Broadcast MCC-MNC (numeric format which consists of a 3-digit country code plus a 2- or 3-digit network code).
If the type is 2, 4 or 5, AT+COPS with the appropriate <mode> displays the same operator name.

<mode>(num)

Set or query URC presentation mode of a specific indicator <indDescr>.

0(P)	Disables the presentation of a specific URC.
1	Enables the presentation of a specific URC. An error will be returned when <indDescr> is set to "simtray".
2	Requests the presentation mode of the URC status and the current value of a single indicator type.

<mwiVoice>(num)

Indicates number of new voice messages. Refer to <indDescr>.

<mwiFax>(num)

Indicates number of new fax messages. Refer to <indDescr>.

<mwiEmail>(num)

Indicates number of new email messages. Refer to <indDescr>.

<mwiOther>(num)

Indicates number of new other messages. Refer to <indDescr>.

<eonsOperator>(str)(+CSCS)

Operator in format which depends on the type associated to the operator name. Refer to <indValue>.

<servProvider>(str)(+CSCS)

Service Provider Name according to the status settings (USIM Service No. 17) in the USIM Service Table (SST) of the USIM.
Service Provider Name (SPN) will be read from EF_{SPN}.

<nitzUT>(str)(+CSCS)

Universal Time delivered as part of the "nitz" Indicator. Refer to <indDescr>.

<nitzTZ>(num)

Time Zone delivered as part of the "nitz" Indicator. Refer to <indDescr>.

<nitzDST>(num)

Adjustment for Daylight Saving Time as part of the "nitz" Indicator. Refer to <indDescr>.

<lstaLevel>(num)

Warning Level

0-11	User value to limit the indication of radio link errors.

Refer to <indDescr>.

<lstaEdvs>(num)

EDVS (0-11)
Error Downcounter value scaled. Refer to <indDescr>.

<lstaRssi>(num)

value in dBm
Received signal strength indication value. Refer to <indDescr>.

<lstaNo>(num)

Number of reported channels. Refer to <indDescr>.

<lstaMin>(num)

value in dBm
Minimal received signal strength value. Refer to <indDescr>.

<lstaMax>(num)

value in dBm
Maximal received signal strength value. Refer to <indDescr>.

<lstaMean>(num)

value in dBm
Mean value of received signal strength across frequency. Refer to <indDescr>.

<lstaVar>(num)

Variance of signal strength across frequency. Refer to <indDescr>.

<lstaDrxCount>(num)

Number of consecutive DRX cycles that serving cell does not meet S-criteria. Refer to <indDescr>.

<lstaRscp>(num)

value in dBm
Received Signal Code Power. Refer to <indDescr>.

<lstaNoise>(num)

value in dBm
The noise indicator derived from <lstaRscp> and the Io from <lstaEcIo>. Refer to <indDescr>.

<lstaEcIo>(num)

Received energy per chip divided by the power density in the band. Refer to <indDescr>.

<lstaFrRep>(num)

Number of reported frequencies. Refer to <indDescr>.

<lstaFrScnd>(num)

Number of scanned frequencies. Refer to <indDescr>.

<lstaFrStart>(num)

Start frequency of the scan. Refer to <indDescr>.

<lstaFrEnd>(num)

End frequency of the scan. Refer to <indDescr>.

<lstaGrade>(num)

Grade derived from the <lstaMean> value of the power scan results. Refer to <indDescr>.

<dtmfChar>(str)

DTMF character string of the "dtmf" URC.

<dtmfSrc>(num)(&W)

Source of the DTMF signal. Refer to <indDescr>, "dtmf".

0	DTMF source is local
1(D)	DTMF source is network

<dtmfSilenceTime>(num)(&W)

0(D)...40...65535	Minimum silence time in milliseconds after which the ME is ready to detect the next valid DTMF tone. Depends on <dtmfSrc> and DTMF scenario. Refer to <indDescr>, "dtmf".

<dtmfBufferTimeout>(num)(&W)

0(D)...65535	Timeout in milliseconds for emptying the DTMF buffer. If the timeout is disabled with <dtmfBufferTimeout>=0, the "dtmf" URC will be sent for each single DTMF character. Refer to <indDescr>, "dtmf".

<dtmfMinToneTime>(num)(&W)

0(D)...45...100	Minimum duration of a DTMF character the can be detected in milliseconds and in steps of 5 milliseconds. If set to 0 the parameter has no effect on the detection. Refer to <indDescr>, "dtmf".

3.3 AT+CPAS Activity Status

AT+CPAS execute command queries EHS6-A's activity status.

Syntax

Test Command
AT+CPAS=?
Response(s)
+CPAS: (list of supported<pas>s) OK

Exec Command
AT+CPAS
Response(s)
+CPAS: <pas> OK

PIN	✈	Last
-	+	-

Reference(s)
3GPP TS 27.007 [44]

Parameter Description

<pas>(num)	
0	Ready (ME allows commands from TE)
1	Unavailable (ME does not allow commands from TE)
2	Unknown(ME is not guaranteed to respond to instructions)
3	Ringing (ME is ready for commands from TE, but the ringer is active)
4	Call in progress, held, waiting (ME is ready for commands from TE)
5	Asleep (ME is unable to process commands from TE because it is in a low functionality state)

4. Serial Interface Control Commands

The AT Commands described in this chapter allow the external application to determine various settings related to the EHS6-A's serial interface.

4.1 AT\Q Flow Control

AT\Q allows to configure flow control on the asynchronous serial interfaces ASC0 and ASC1 (UARTs). It is strongly recommended to always use RTS/CTS hardware flow control. In particular, when using SLEEP mode (see AT^SPOW) or Multiplex mode (see AT+CMUX), ensure that both ME and TE have RTS/CTS hardware flow control enabled.

The AT\Q setting is always common for all interfaces and can be changed, for compatibility reasons, on each interface, but is only applicable to the ASC0 and ASC1 interfaces. AT\Q settings have no effect on the USB ports because the USB protocol integrates a flow control mechanism of its own.

Syntax

Exec Command
AT\Q[<n>]
Response(s)
OK

PIN	✈	Last
-	+	-

Parameter Description

<n>(num)(&V)(&W)	
[0]	Disable flow control
1	XON/XOFF software flow control Value 1 can be set on ASC0 and ASC1, but XON/XOFF software flow control takes effect only on ASC0. On ASC1, RTS/CTS hardware flow control remains effective even though value 1 has been selected.
2	This value is not supported and will be mapped to RTS/CTS hardware flow control
3(&F)(D)	RTS/CTS hardware flow control

Note

- When using XON/XOFF flow control (AT\Q1) in online mode, +++ should not be used while the data transmission is paused with XOFF. Before entering the command mode with +++ the paused transmission should be resumed using the XON character.

4.2 AT&C Set Data Carrier Detect (DCD) Line Mode

The AT&C command controls the behavior of the ME's DCD line.

AT&C offers full functionality only if the DCD0 line is enabled with AT^SCFG="GPIO/mode/DCD0","std". Otherwise AT&C will respond "+CME ERROR: operation not allowed".

Syntax

Exec Command
AT&C[<value>]
Response(s)
OK

PIN ✈	Last
-	+ -

Reference(s)
V.250

Parameter Description

<value>(num)(&V)(&W)	
[0]	DCD line shall always be on.
1(&F)	DCD line shall be on only when data carrier signal is present.
2	DCD line shall be on when one or more Internet services defined on the related serial channel are in state "Connecting" or "Up" as described below. For details on the various service states refer to AT^SISI, parameter <srvState> or AT^SISO, parameter <srvState>. • Transparent TCP or Transparent UDP client, SOCKET, HTTP, SMTP: DCD shall be on when <srvState>="Connnecting" or "Up" • Transparent TCP Listener: DCD shall be on when <srvState>="Connected" • FTP: DCD shall be on when data channel is connected, i.e. <srvState>="Up"

4.3 AT&D Set Data Terminal Ready (DTR) Line Mode

AT&D determines how the ME responds if the DTR line is changed from ON to OFF state during data connection (CSD or PPP or active Internet Services transparent access mode; refer to AT^SIST).

AT&D offers full functionality only if the DTR0 line is enabled with AT^SCFG="GPIO/mode/DTR0","std". Otherwise AT&D will respond "+CME ERROR: operation not allowed".

Syntax

Exec Command	
AT&D[<value>]	
Response(s)	
OK	

PIN	✈	Last
-	+	-

Reference(s)
V.250

Parameter Description

<value>(num)(&V)(&W)

[0]	ME ignores status of the DTR line.
1	ON->OFF on DTR: Change to command mode while retaining the data connection.
2(&F)	ON->OFF on DTR: Disconnect the data connection (only for CSD and PPP) and change to command mode. For Internet service the behaviour is like AT&D1. During OFF state of the DTR line the auto-answer function (see ATS0) is disabled.

4.4 AT&S Set Data Set Ready (DSR) Line Mode

AT&S determines how the ME sets the DSR line depending on its communication state.

AT&S offers full functionality only if the DSR0 line is enabled with AT^SCFG="GPIO/mode/DSR0","std". Otherwise AT&S will respond "+CME ERROR: operation not allowed".

Syntax

Exec Command
AT&S[<value>]
Response(s)
OK

PIN ✈	Last
-	+ -

Reference(s)
ITU-T V.250 [15]

Parameter Description

<value>(num)(&V)(&W)	
[0](&F)	DSR line is always ON
1	ME in command mode: DSR is OFF. ME in data mode: DSR is ON.

4.5 ATE AT Command Echo

ATE controls if the EHS6-A echoes characters received from TE during AT command state.

Syntax

Exec Command
ATE[<value>]
Response(s)
OK

PIN ✈	Last
-	+ -

Reference(s)
V.250

Parameter Description

<value>(num)(&V)(&W)	
[0]	Echo mode off
1(&F)	Echo mode on

4.6 AT+ICF Character Framing

AT+ICF controls character framing and parity format used for receiving and transmitting data via EHS6-A's asynchronous serial interfaces (UART).

Following settings are supported:

- 7 bits, even parity, 1 stop bit (AT+ICF=5,1)
- 7 bits, odd parity, 1 stop bit (AT+ICF=5,0)
- 8 bits, even parity, 1 stop bit (AT+ICF=2,1)
- 8 bits, no parity, 1 stop bit (AT+ICF=3)
- 8 bits, odd parity, 1 stop bit (AT+ICF=2,0)
- 8 bits, no parity, 2 stop bits (AT+ICF=1)

The selected setting is stored in the user defined profile with next AT&W. It will only be used on next start of the EHS6-A if configured to use a fixed bit rate, i.e. without autobaud usage. The autobaud feature (refer AT+IPR) detects bit rate and character framing currently used by a connected TE. However, this detection suffers some limitations described at Section 4.7.1, Autobauding.
AT+ICF read command will always show the setting stored in the user defined profile, not a currently detected character framing.

If Autobauding is enabled (AT+IPR0=), changing AT+ICF settings is not allowed.

If the current <format> setting uses no parity (e.g. <format>=3) and AT+ICF is used to switch to a format with parity (e.g. <format>=2), it is necessary to explicitly set parameter <parity>, e.g. AT+ICF=2,1. If not done correctly EHS6-A will respond with "+CME ERROR: invalid index". This is because for <format>=3, the parameter <parity> is set to the internal value 'no parity' which is not supported by <format>=2. Please remember that if an optional parameter is omitted for which no default is stated in this document, the value of the parameter remains unchanged.

Syntax

Test Command

```
AT+ICF=?
```

Response(s)

```
+ICF: (list of supported <format>s), (list of supported <parity>s)
OK
```

Read Command

```
AT+ICF?
```

Response(s)

```
+ICF: <format>[, <parity>]
OK
```

Write Command

```
AT+ICF=[<format>[, <parity>]]
```

Response(s)

```
OK
ERROR
+CME ERROR: <err>
```

PIN	✈	Last
-	+	+

Reference(s)

V.250

Parameter Description

`<format>`(num)(&V)(&W)

Specifies the character format used for receiving and transmitting.

1	8 data 0 parity 2 stop
2	8 data 1 parity 1 stop
3(&F)(D)	8 data 0 parity 1 stop
5	7 data 1 parity 1 stop

`<parity>`(num)(&V)(&W)

Specifies the method of calculating the parity bit, if a parity bit is supported by `<format>`.
If `<format>` does not support parity, this parameter has to be omitted.

0	odd
1	even

4.7 AT+IPR Bit Rate

AT+IPR allows to query and set the bit rate of the EHS6-A's asynchronous serial interface (UART).

The test command returns the values of supported automatically detectable bit rates and the values of the supported fixed bit rates.

The read command returns the bit rate currently used on the interface.

The write command specifies the bit rate to be used for the interface. If using a fixed bit rate, make sure that both EHS6-A and TE are configured to the same rate.
In case of Autobaud mode (AT+IPR=0) the detected TE bit rate will not be saved and, therefore, needs to be resynchronized after any restart of the ME (for details refer to Section 4.7.1, Autobauding).
It is not recommended to set bit rates lower than 9600 bps in order to avoid timing problems (see Section 1.7, Communication between Customer Application and EHS6-A for details about timing).

Syntax

Test Command

```
AT+IPR=?
```

Response(s)

```
+IPR: (list of supported auto-detectable <rate>s), (list of supported fixed-only <rate>s)
OK
```

Read Command

```
AT+IPR?
```

Response(s)

```
+IPR: <rate>
OK
```

Write Command

```
AT+IPR=<rate>
```

Response(s)

```
OK
ERROR
+CME ERROR: <err>
```

PIN	✈	Last
-	+	+

Parameter Description

<rate>(num)(&V)(NV)

Bit rate per second (bps)

0	Autobauding See Section 4.7.1, Autobauding for further details.
1200	
2400	
4800	
9600	
19200	
38400	
57600	
115200(D)	

230400
460800
500000
750000
921600

Note

- Generally, AT+IPR should be used as a standalone command as specified in in Section 1.6.2, Concatenating AT Commands.
  If nevertheless combinations with other commands on the same command line cannot be avoided, there are several constraints to be considered:
  - Avoid combinations with the AT commands listed in Section 1.6.2, Concatenating AT Commands.
  - Keep in mind that there shall be a minimum pause between two AT commands as specified in Section 1.7, Communication between Customer Application and EHS6-A.
  - If switching to the new bit rate takes effect while a response is being transmitted, the last bytes may be sent with the new bit rate and thus, not properly transmitted. The following commands will be correctly sent at the new bit rate.
    Please consider this effect especially when local echo is active (ATE1).

4.7.1 Autobauding

To take advantage of Autobaud mode specific attention must be paid to the following requirements:

- Autobaud mode does not take effect immediately after executing the write command AT+IPR=0. Instead the old bit rate remains active. Autobaud mode will be activated with every restart of the ME.
- If Autobaud mode is set, ensure that the ME detects the bit rate set in the TE. To do so, enter an "AT" or "at" string each time after restarting the ME. (Note that other strings, such as "a", "At" or "aT" will not be detected.) After detecting the bit rate the ME will send the "^SYSSTART" URC.
  Other URCs that may have been buffered before the bit rate was detected will be printed after the "^SYSSTART" URC. For example, if SIM PIN1 password request is disabled (AT+CLCK="SC",0,"xxxx") the "+PBREADY" URC may follow after the "^SYSSTART" URC.
- After the successful synchronization between TE and ME the Autobaud mode mechanism of the ME is deactivated until next restart. So, while Autobaud mode is set you will need to restart the ME each time after changing the bit rate of the TE.
- Autobaud mode cannot be used if the ME operates with Java.

4.8 AT+CMUX Multiplex mode

Multiplex mode according to 3GPP TS 27.010 [5] enables the use of virtual channels set up over one single serial interface. Every channel is used as an independent serial link. This way, up to three simultaneous AT command sessions can be handled at a time. For example, the first Mux channel can be used to send or receive data, while two Mux channels are available to control the module with AT commands or to establish a dedicated channel to receive Unsolicited Result Codes (URC), e.g. "+CIEV:" or "RING".

The multiplex driver can be installed on the first serial interface ASC0 and all USB AT command instances. At a time Multiplex mode it can be started only on one of these interfaces. All remaining AT instances can be used in parallel. The second serial interface ASC1 is not recommended to be used for Multiplex mode.

EHS6-A incorporates an internal multiplexer and thus integrates all the functions needed to implement full-featured multiplex solutions. For the application on top, customers have the flexibility to create their own multiplex programs conforming to the multiplexer protocol. To help system integrators save the time and expense of designing multiplexer applications, Cinterion Wireless Modules GmbH offers WinMUX, a ready-to-use multiplex driver for Windows XP, Windows Vista and Windows 7. Another approach is to develop customized solutions based on the sources of the WinMUX driver.
Refer to "Multiplexer User's Guide" [4] which provides a detailed description of the multiplex architecture and step-by-step instructions of how to install and configure the Multiplex mode. The WinMUX driver and its source files can be supplied on request. Please contact your local distributor to obtain the latest installation software and user's guide.

AT+CMUX write command is used to enter Multiplex mode. Setup of the logical channels is initiated by the TE, i.e. the TE acts as initiator. This means that the TE shall ensure that logical channels are established before any further actions on the channels can be started. There is a timeout of five seconds, if the multiplexer protocol is enabled but no multiplexer control channel is established. Afterwards EHS6-A returns to AT command mode.
The parameter maximum frame size (N1) according to 3GPP TS 27.010 [5] is implemented as 98 bytes by default. All other parameters are not available. Refer to "Multiplexer User's Guide" [4] for further details regarding frame size.

Syntax

Test Command

```
AT+CMUX=?
```

Response(s)

```
+CMUX: (list of supported<mode>s)
OK
```

Read Command

```
AT+CMUX?
```

Response(s)

```
+CMUX: <mode>
OK
ERROR
+CME ERROR: <err>
```

Write Command

```
AT+CMUX=<mode>
```

Response(s)

```
OK
ERROR
+CME ERROR: <err>
```

PIN	✈	Last
-	+	+

Reference(s)

3GPP TS 27.007 [44],
3GPP TS 27.010 [5]

Parameter Description

<mode>(num)	
Enable Multiplex mode.	
0	Basic option

Note

- In Multiplex mode, the write command AT+IPR=<rate> is accepted and always returns "OK" but has no effect.

5. Identification Commands

The AT Commands described in this chapter allow the external application to obtain various identification information related to the EHS6-A and linked entities.

5.1 ATI Display product identification information

The ATI execute command delivers a product information text.

Syntax

Exec Command

ATI

Response(s)

Cinterion
EHS6-A
REVISION xx.yyy
OK

Exec Command

ATI1

Response(s)

Cinterion
EHS6-A
REVISION xx.yyy
A-REVISION aa.bbb.cc
OK

Exec Command

ATI176

Response(s)

<imeisv_number>
OK

PIN	✈	Last
-	+	-

Reference(s)

ITU-T V.250 [15]

Parameter Description

<imeisv_number>(num)

IMEISV (International Mobile station Equipment Identity and Software Version number) conforming to the format: <IMEI>.<SVN>. For information on IMEISV refer to 3GPP TS 23.003 and 3GPP TS 27.007 [44].

Notes

- The "Revision" information consists of the following parts: Version xx and variant yyy of software release.
- "A-REVISION aa.bbb.cc" information consists of the following parts:
  Application Revision Number 'aa' as an indication of the supported application ('01' ... no dedicated application is present, ATC is the default application).
  Application Revision Version 'bbb' as an assignment to changes in customer application.
  'cc' as an additional number, e.g. defined by customer.

5.2 AT+CGMI Request manufacturer identification

AT+CGMI returns a manufacturer identification text.

Syntax

Test Command
AT+CGMI=?
Response(s)
OK

Exec Command
AT+CGMI
Response(s)
Cinterion OK

PIN	✈	Last
-	+	-

Reference(s)
3GPP TS 27.007 [44]

5.3 AT+CGMM Request model identification

AT+CGMM returns a product model identification text.

Syntax

Test Command
AT+CGMM=?
Response(s)
OK

Exec Command
AT+CGMM
Response(s)
EHS6-A OK

PIN	✈	Last
-	+	-

Reference(s)
3GPP TS 27.007 [44]

5.4 AT+CGMR Request revision identification of software status

AT+CGMR delivers a product firmware version identification.

Syntax

Test Command
AT+CGMR=?
Response(s)
OK

Exec Command
AT+CGMR
Response(s)
REVISION <number> OK

PIN	✈	Last
-	+	-

Reference(s)
3GPP TS 27.007 [44]

Parameter Description

<number>(str)

Version xx and variant yyy of software release.

5.5 AT+CGSN Request International Mobile Equipment Identity (IMEI)

AT+CGSN delivers the International Mobile Equipment Identity (IMEI). Command is identical with: AT+GSN.

Syntax

Test Command
AT+CGSN=?
Response(s)
OK

Exec Command
AT+CGSN
Response(s)
<sn> OK

PIN	✈	Last
-	+	-

Reference(s)
3GPP TS 27.007 [44]

Parameter Description

<sn>(str)

International Mobile Equipment Identity (IMEI) used to identify a GSM mobile equipment to the GSM network

5.6 AT+GSN Request International Mobile Equipment Identity (IMEI)

AT+GSN delivers the International Mobile Equipment Identity (IMEI). Command is identical with AT+CGSN

Syntax

Test Command
AT+GSN=?
Response(s)
OK

Exec Command
AT+GSN
Response(s)
<sn> OK

PIN	✈	Last
-	+	-

Reference(s)
V.250

Parameter Description

<sn>(str)

International Mobile Equipment Identity (IMEI) used to identify a GSM mobile equipment to the GSM network.

5.7 AT+CIMI Request International Mobile Subscriber Identity (IMSI)

AT+CIMI delivers the International Mobile Subscriber Identity (IMSI). The IMSI permits the TE to identify the individual SIM attached to the ME.

Syntax

Test Command
AT+CIMI=?
Response(s)
OK

Exec Command
AT+CIMI
Response(s)
<imsi> OK ERROR +CME ERROR: <err>

PIN	✈	Last
+	+	-

Reference(s)
3GPP TS 27.007 [44]

Parameter Description

<imsi>(str)

International Mobile Subscriber Identity (string without quotes).

6. Security Commands

The AT Commands described in this chapter allow the external application to determine various security related settings.

6.1 AT+CPIN PIN Authentication

The AT+CPIN write command can be used to enter one of the passwords listed below. The read command can be used to check whether or not the ME is waiting for a password, or which type of password is required.

This may be for example the SIM PIN1 to register to the GSM or UMTS network, or the SIM PUK1 to replace a disabled SIM PIN1 with a new one, or the PH-SIM PIN if the client has taken precautions for preventing damage in the event of loss or theft etc. If requested by the ME AT+CPIN may also be used for the SIM PIN2 or SIM PUK2.

If no PIN1 request is pending (for example if PIN1 authentication has been done and the same PIN1 is entered again) EHS6-A responds "+CME ERROR: Incorrect parameters"; no further action is required.

Syntax

Test Command

```
AT+CPIN=?
```

Response(s)

```
OK
```

Read Command

```
AT+CPIN?
```

Response(s)

```
+CPIN: <code>
OK
ERROR
+CME ERROR: <err>
```

Write Command

```
AT+CPIN=<pin>[, <new pin>]
```

Response(s)

```
OK
ERROR
+CME ERROR: <err>
```

PIN ✈	Last
- +	-

Reference(s)

3GPP TS 27.007 [44]

Parameter Description

<pin>(str)

Password (string type), usually SIM PIN1.
If the requested password was a PUK, such as SIM PUK1 or PH-FSIM PUK or another password, then <pin> must be followed by <new pin>.

<new pin>(str)

If the requested code was a PUK: specify a new password or restore the former disabled password.

<code>(text)	
SIM PIN authentication	
READY	PIN has already been entered. No further entry needed.
SIM PIN	ME is waiting for SIM PIN1.
SIM PUK	ME is waiting for SIM PUK1 if PIN1 was disabled after three failed attempts to enter PIN1.
SIM PIN2	ME is waiting for PIN2. This is only applicable when an attempt to access a PIN2 related feature was acknowledged with +CME ERROR: 17 ("SIM PIN2 required"), for example when the client attempts to edit the FD phonebook). In this case the read command AT+CPIN? also prompts for SIM PIN2. See also AT+CPIN2.
SIM PUK2	ME is waiting for PUK2 to unblock a disabled PIN2. As above, this is only necessary when the preceding command was acknowledged with +CME ERROR: 18 ("SIM PUK2 required") and only if the read command AT+CPIN? also prompts for SIM PUK2. See also AT+CPIN2.
Phone security locks set by client or factory	
PH-SIM PIN	ME is waiting for phone-to-SIM card password if "PS" lock is active and the client inserts other SIM card than the one used for the lock. ("PS" lock is also referred to as phone or antitheft lock).
PH-NET PUK	ME is waiting for network personalisation unblocking password
PH-NETSUB PIN	ME is waiting for network subset personalisation password
PH-NETSUB PUK	ME is waiting for network subset unblocking password
PH-SP PIN	ME is waiting for service provider personalisation password
PH-SP PUK	ME is waiting for service provider personalisation unblocking password
PH-CORP PIN	ME is waiting for corporate personalisation password
PH-CORP PUK	ME is waiting for corprorate personalisation un-blocking password

Notes

- Successful PIN authentication only confirms that the entered PIN was recognized and correct. The output of the result code OK does not necessarily imply that the mobile is registered to the desired network.
  Typical example: PIN was entered and accepted with OK, but the ME fails to register to the network. This may be due to missing network coverage, denied network access with currently used SIM card, no valid roaming agreement between home network and currently available operators etc.
  EHS6-A offers various options to verify the present status of network registration: For example, the AT+COPS command indicates the currently used network. With AT+CREG you can also check the current status and activate an unsolicited result code which appears whenever the status of the network registration changes (e.g. when the ME is powered up, or when the network cell changes).
- See AT+CPWD for information on passwords.
- See AT+CLCK for information on lock types.

6.2 AT+CPIN2 PIN2 Authentication

AT+CPIN2 controls the authentication of SIM PIN2.
The read command returns an alphanumeric string indicating whether or not SIM PIN2 authentication is required.
The write command allows the EHS6-A to verify the SIM PIN2 password. This may be for example the SIM PIN2 to benefit from the features listed below, or the SIM PUK2 to replace a PIN2 with a new one. Note that PIN2 can only be entered if PIN1 authentication was done.
If the EHS6-A is requesting SIM PUK2, use <pin> to enter the PUK2, followed by <new pin> to specify the new PIN2.

Syntax

Test Command

```
AT+CPIN2=?
```

Response(s)

```
OK
```

Read Command

```
AT+CPIN2?
```

Response(s)

```
+CPIN2: <code>
OK
ERROR
+CME ERROR: <err>
```

Write Command

```
AT+CPIN2=<pin>[, <new pin>]
```

Response(s)

```
OK
ERROR
+CME ERROR: <err>
```

PIN	✈	Last
-	+	-

Parameter Description

<pin>(str)

Password (string type), usually SIM PIN2 or, if requested, SIM PUK2.

<new pin>(str)

If the requested code was SIM PUK2: new password (PIN2).

<code>(text)

READY	ME is not pending for any password.
SIM PIN2	ME is waiting for SIM PIN2. This <code> is returned only when PIN2 authentication has not yet been done or has failed ("+CME ERROR: 17").
SIM PUK2	ME is waiting for SIM PUK2. This <code> is returned only when PIN2 authentication has failed and ME is pending for SIM PUK2 (i.e. "+CME ERROR: 18").

Note

- Functions accessible only after PIN2 authentication:
  AT+CACM: Accumulated call meter (ACM) reset or query
  AT+CAMM: Accumulated call meter maximum (ACMmax) set or query
  AT+CLCK: Facility lock to "FD" (Fixed dialing phonebook)
  AT+CPWD: Change "P2"password
  AT+CPUC: Price per unit and currency table
  AT+CPIN2: Enter SIM PIN2 or SIM PUK2 if requested.

  For example, SIM PIN2 will be needed when you attempt to choose the "FD" phonebook and ME returns "+CME ERROR: 17".
  Once the required <pin> has been entered correctly, PIN2 authentication code changes to READY.

Examples

EXAMPLE 1

Change PIN2

```
AT+CPWD="P2","0000","8888"          (where "0000" = old PIN2 and "8888" = new PIN2)
OK
```

EXAMPLE 2

Unblock a disabled PIN2

```
AT+CPIN2?
+CPIN2: SIM PUK2                    PIN2 has been disabled, PUK2 must be entered
OK                                  to define a new PIN2
AT+CPIN2="12345678","8888"          where "12345678" is the PUK2, and "8888" the new
                                    PIN2.
```

6.3 AT+CLCK Facility lock

AT+CLCK can be used to lock, unlock or interrogate a network or ME <facility>. The command can be aborted when network facilities are being set or interrogated.

Syntax

Test Command

AT+CLCK=?

Response(s)

+CLCK: list of supported <facility>s
OK

Write Command

AT+CLCK=<facility>, <mode>[, <password>][, <class>]

Response(s)

if <mode> is not equal 2 and command successful:
OK
if <mode>= 2 and command successful:
+CLCK: <status>[, <class>]
[+CLCK: <status>[, <class>]]
[+CLCK: ...]
OK
ERROR
+CME ERROR: <err>

PIN	✈	Last
-	±	-

Reference(s)

3GPP TS 27.007 [44],
3GPP TS 22.004 [24],
3GPP TS 22.088 [32],
3GPP TS 23.088,
3GPP TS 24.088

Parameter Description

<facility>(str)

Phone security locks set by client or factory

Primarily intended for the client to take safety precautions, "SC", "PS" and "FD" can be configured individually. "PS" may also be factory set.
Parameter <class> is not applicable to security locks.
See examples below for further details.

“SC“	SIM (lock USIM cards) USIM requests password upon ME power-up and when this lock command is issued. <password>: SIM PIN1.
“PS“	PH SIM (lock PHone to USIM card). ME requests password when other than current USIM card is inserted. <password>: PH-SIM PIN.
“FD“	SIM Fixed Dialing lock <password>: SIM PIN2. If "FD" lock is enabled numbers or public MMI *# codes can be used only if they start with matching numbers or characters stored in the "FD" phonebook. The capacity of the "FD" phonebook is depending on the SIM card. If "FD" lock is enabled the following applies:

- Handling of Supplementary Services:
  The "FD" lock is effective only for AT+CCFC <mode> 3 (registering the CF destination number). All other Supplementary Services and functions provided by AT+CCFC are not restricted by the "FD" lock.
- GPRS commands can be used only if the "FD" phonebook contains an entry with phone number "*99#". This single entry enables all GPRS commands, including AT commands and modem compatibility commands like "ATD*99***1#" or "ATD*98***1#".
  Indication is "+CME ERROR: call barred".

Factory defined USIM locks:

Typical examples of factory set USIM locks are prepaid phones or network locks, used to restrict the operation of a mobile to a specific provider or operator. The client should be aware that each of these lock types can only be unlocked if the associated password is available. The locks can only be set by the manufacturer and need to be agreed upon between the parties concerned, e.g. provider, operator, distributor etc. on the one side and the manufacturer on the other side. For details contact your local dealer or Gemalto M2M GmbH.
Parameter <class> is not applicable to SIM locks.
<password> and instructions for unlocking must be obtained from the network provider.

“PN“	Network Personalisation
“PU“	Network subset Personalisation
“PP“	Service Provider Personalisation
“PC“	Corporate Personalisation

Supplementary Service Call Barring:

Supplementary Service "Call Barring" allows to specify conditions under which calls will be disallowed by the network.
The availability of the Supplementary Services varies with the network. To benefit from call barring the client will need to subscribe them, though a limited number of call barring types may be included in the basic tariff package.
When you attempt to set a <facility> or <class> which is not provisioned, not yet subscribed to, or not supported by the module, the setting will not take effect regardless of the response returned. The responses in these cases vary with the network (for example "OK", "+CME ERROR: operation not allowed", "+CME ERROR: operation not supported" etc.). To make sure check the extended error response with AT+CEER and the lock status with <mode>=2.
<password>: Network password supplied from the provider or operator. Usually there is one password which applies to all call barring options. For details contact your provider.

“AO“	BAOC (Bar All Outgoing Calls)
“OI“	BOIC (Bar Outgoing International Calls)
“OX“	BOIC-exHC (Bar Outgoing International Calls except to Home Country)
“AI“	BAIC (Bar All Incoming Calls)
“IR“	BIC-Roam (Bar Incoming Calls when Roaming outside the home country)
“AB“	All Barring services (applicable only for <mode>=0)
“AG“	All outGoing barring services (applicable only for <mode>=0)
“AC“	All inComing barring services (applicable only for <mode>=0)

<mode>(num)	
0	Unlock
1	Lock
2	Query status

<status>(num)	
0	Lock is inactive
1	Lock is active

<password>(str)

Password string used to lock and to unlock a <facility>. Length and authority for passwords depend on the <facility> in question and are therefore listed in the section on parameter <facility>. Passwords can be modified with AT+CPWD.

<class>(num)

Integer or sum of integers each representing a class of information, i.e. a bearer service, telecommunication service or bearer service group as defined in 3GPP TS 22.004 [24].

1	Voice
2	Class 2 ("data") comprises all those individual data classes between 16 and 128, that are supported both by the network and the MS. This means, a setting made for class 2 applies to all individual data classes (if supported). In addition, you can assign a different setting to a specific class. For example, you can activate Call Forwarding for all data classes, but deactivate it for data class 64, "dedicated packet access".
4	Fax
8	SMS
16	Data circuit sync
32	Data circuit async
64	Dedicated packet access
128	Dedicated PAD access
1...[7]...255	Combination of some of the above classes. For example, the default setting 7 represents the sum of the integers 1, 2 and 4 (voice, data and fax). The value 255 covers all classes. If parameter "class" is omitted, the default value 7 is used.

Note

- The AT+CLCK command offers the full range of <class> parameters according to the 3GPP Technical Specifications. However, when you attempt to use a service option which is not provisioned or not yet subscribed to, the setting will not take effect regardless of the response returned.
  The responses in these cases vary with the network (for example "OK", "Operation not allowed", "Operation not supported" etc.). To make sure check the extended error response with AT+CEER and the lock status with <mode>=2.

Examples

EXAMPLE 1

Lock USIM card (<facility>= "SC")

AT+CLCK="SC",1,"9999"	The "SC" parameter enables or disables the SIM PIN authentication (PIN 1) when you power up the ME.
OK	USIM card locked. As a result, SIM PIN 1 must be entered to enable ME to register to the network.

AT+CLCK="SC",0,"9999" OK	Unlocks SIM card. When powered up, ME registers to the network without requesting SIM PIN1. Note: Depending on the services offered by the provider, this feature is not supported by all SIM card types. If so, the command returns ERROR when you attempt to unlock the card.

To query the status of the SIM card lock:

AT+CLCK="SC",2 +CLCK: 1 OK	Query the status of SIM card lock. USIM card is locked. SIM PIN1 must be entered to enable ME to register to the network.

EXAMPLE 2

Phone lock (<facility>="PS")

AT+CPIN? OK	Make sure that PIN1 authentication is valid.

To lock the ME to the currently inserted USIM card, first specify a password for <facility> "PS":

AT+CPWD="PS",,"1234" OK	If "PS" lock has not been set before: enter new password.

Optionally, if "PS" password was defined before, change existing password:

AT+CPWD="PS","1234","3333" OK	To replace existing "PS" password: Enter old and new password.

Then, activate the Phone Lock:

AT+CLCK="PS",1,"3333" OK	Locks the mobile to the current SIM card.

To operate the mobile with the USIM card for which "PS" lock was activated:

AT+CPIN? +CPIN: SIM PIN OK AT+CPIN="9999" OK	No additional password is required for operation (USIM recognized by mobile).

To operate the mobile with other USIM card than the one used for the "PS" lock:
Enter SIM PIN of present card, followed by "PS" lock password.

AT+CPIN? +CPIN: SIM PIN OK AT+CPIN="1111" OK	PIN authentication accepted.
AT+CPIN? +CPIN: PH-SIM PIN OK AT+CPIN="3333" OK	"PS" lock password is required. "PS" Lock password has been accepted. ME is fully operational now.

To deactivate the Phone Lock:

AT+CLCK="PS",0,"3333" OK	Phone Lock password has to be provided again. Now the mobile can be used with any USIM card, without the need of the phone lock password.

6.4 AT+CPWD Change Password

AT+CPWD allows to define a new password for a password protected <facility> lock function. Each password is a string of digits, the length of which varies with the associated <facility>. The test command returns a list of pairs which represent the available facilities and the maximum length of the associated password. See AT+CLCK for more information on the various lock features.

Specifically the command can be used to

- change PIN1 or PIN2,
- change the password supplied from your provider for the "call barring" supplementary service,
- set individual phone security passwords,

To delete a password use the following syntax: AT+CPWD=<facility>,<old password>.

Syntax

Test Command

AT+CPWD=?

Response(s)

+CPWD: list of supported (<facility>, <password length>)
OK

Write Command

AT+CPWD=<facility>, <old password>[, <new password>]

Response(s)

New password has been registered for the facility lock function.
OK
If parameter <old password> was not correct:
+CME ERROR: 16 (+CME ERROR: incorrect password)
If the password for the selected <facility> has been invalidated due to too many failed attempts:
+CME ERROR: ...
If error is related to ME functionality:
+CME ERROR: <err>

PIN	✈	Last
+	±	-

Reference(s)

3GPP TS 27.007 [44]

Parameter Description

<facility>(str)

Phone security locks set by client or factory:

Primarily intended for the client to take safety precautions, passwords "SC" (SIM PIN) and "P2" (SIM PIN2) are usually predefined, but can be configured individually. The password for lock facility "PS" may also be factory set.

“SC“	SIM PIN. USIM requests password upon ME power-up and when this lock command is issued. If incorrectly entered three times, the SIM PUK is required to perform authentication. Input of the SIM PUK password is possible only with AT command AT+CPIN or ATD. <password length>: 4 to 8 digits.

“PS“	Phone locked to USIM card. ME requests password when other than current USIM card is inserted. "PS" lock is frequently referred to as "phone lock", or "device lock".
“P2“	SIM PIN 2, e.g. required for authentication with facility lock "FD" (cf. AT+CLCK). If incorrectly entered three times, the SIM PUK 2 is required to perform authentication. Input of the SIM PUK 2 password is possible only with AT command AT+CPIN2 or ATD. <password length>: 4 to 8 digits.

Factory defined USIM locks:

Typical examples of factory set USIM locks are prepaid phones or network locks, used to restrict the operation of a mobile to a specific provider or operator. The client should be aware that each of these lock types can only be unlocked if the associated password is available. The locks can only be set by the manufacturer and need to be agreed upon between the parties concerned, e.g. provider, operator, distributor etc. on the one side and the manufacturer on the other side. For details contact your local dealer or Gemalto M2M GmbH.

“PN“	Network Personalisation
“PU“	Network subset Personalisation
“PP“	Service Provider Personalisation
“PC“	Corporate Personalisation

Supplementary Service Call Barring:

Supplementary Service "Call Barring" allows to specify conditions under which calls will be disallowed by the network.
The availability of the Supplementary Services varies with the network. To benefit from call barring the client will need to subscribe them, though a limited number of call barring types may be included in the basic tariff package.
<password length>: The Network Password needs to be supplied from the network provider or network operator. Usually there is one 4 digit password which applies to all call barring options. For details contact your provider.

“AO“	BAOC (Bar All Outgoing Calls)
“OI“	BOIC (Bar Outgoing International Calls)
“OX“	BOIC-exHC (Bar Outgoing International Calls except to Home Country)
“AI“	BAIC (Bar All Incoming Calls)
“IR“	BIC-Roam (Bar Incoming Calls when Roaming outside the home country)
“AB“	All Barring services
“AG“	All outGoing barring services
“AC“	All inComing barring services

<password length>(num)

4...16	Length of password. The range of permitted length for a password depends on the associated <facility>. It is available from the test command response, or in the description of parameter <facility>.

<old password>(str)

Password specified for the facility.
Parameter <old password> can be ignored if no old password was allocated to the facility.
Take into account that a password may have already been set by factory, or that the service is subject to a password issued by the provider. See notes above or contact provider.

<new password>(str)

New password. Mandatory, if <old password> was an unblocking key (such as the Master Phone Code).

Note

- When changing PIN2 (<facility>="P2") it is recommended to check the new state of PIN2 by using the AT+CPIN2 command.

Examples

EXAMPLE 1

To change PIN2

AT+CPWD="P2","0000","8888"	(where "0000" = old PIN2 and "8888" = new PIN2)
OK	PIN2 Password has been changed to "8888"

EXAMPLE 2

To set password used to enable or disable barring of all outgoing calls:

AT+CPWD="AO","0000","3333"	Requests the network to change the password for supplementary service "call barring".
OK	Usually this request will affect all barring services, even though the request is issued for Supplementary Service BAOC ("Barring of all outgoing calls") only. Refer to the respective network provider for detail.

7. Call related Commands

The AT Commands described in this chapter are related to Mobile Originated (MOC, i.e. outgoing) Calls and Mobile Terminated (MTC, i.e. incoming) Calls.

7.1 ATA Connect to Incoming Call

ATA connects the EHS6-A to an incoming voice or data call, which is indicated by a "RING" URC. AT+CRC allows to customize the format of the incoming call URC.

Syntax

Exec Command

ATA

Response(s)

In case of incoming data call, if successfully connected (ME switches to data mode):
CONNECT <text>
In case of voice call, if successfully connected:
OK
When ME returns to command mode after call release:
OK
If incoming call is not available, i.e. already disconnected or hanged up:
NO CARRIER

PIN	✈	Last
+	-	-

Reference(s)

ITU-T V.250 [15]

Parameter Description

<text>(str)

Connection speed

Presented only if ATX parameter setting is greater 0.
Possible connection speed values:

“2400“

“4800“

“9600“

Notes

- Additional AT commands on the same command line are ignored.
- ATA may be aborted if receiving a character during execution. It can't be aborted in some connection setup states, such as handshaking.

7.2 ATD Mobile originated call to specified number

ATD can be used to set up outgoing voice and data calls. It can also be used to send *# codes for Supplementary Services and other functions. The termination character ";" shall be added when a voice call is originated.

Using ATD during an active call:

- When a user originates a second voice call while there is already an active voice call, the first call will automatically be put on hold.

Syntax

Exec Command

ATD<n>[<mgsm>][;]

Response(s)

If successfully connected and non-voice call (ME switches to online data mode):
CONNECT <text>
If voice call and command input is completed:
OK
If no dialtone (parameter setting ATX3 or ATX4):
NO DIALTONE
If busy (parameter setting ATX3 or ATX4):
BUSY
If connection cannot be set up:
NO CARRIER
NO ANSWER
ERROR
+CME ERROR: <err>

PIN	✈	Last
±	-	-

Reference(s)

ITU-T V.250 [15]

Parameter Description

<n>(text)

String of dialing digits and optional V.250 modifiers: 0-9, *, #, +, A, B, C, D and p
The following V.250 modifiers are ignored: ,(comma), T, !, W ,@

DTMF transmission: If the dial string <n> contains the call modifier "p" the digits after this call modifier till the end are handled as DTMF tones (0-9,*,#), which are transmitted at connect state for voice calls. When encountering the DTMF separator subsequently, the module will insert a pause.

<mgsm>(str)

String of GSM modifiers:
I Activates CLIR (disables presentation of own phone number to called party, if no *#31#-code is within the dial string)
i Deactivates CLIR (enables presentation of own phone number to called party, if no *#31#-code is within the dial string)
G Activate Closed User Group explicit invocation for this call only.
g Deactivate Closed User Group explicit invocation for this call only.

Notes

- <mgsm> is not supported for data calls.
- <n> is default for last number that can be dialed by ATDL.
- See also ATX for <text>.
- Parameter 'G' or 'g' will be ignored if Closed User Group was already activated, respectively deactivated with AT+CCUG command before. Call by call invocation of CUG uses the settings provisioned by the provider or, if available, the settings of the parameters <index> and <info> made with AT+CCUG.
- Emergency calls:
  If no SIM is inserted, call numbers 000, 08, 110, 112, 118,119, 911 and 999 cause an emergency call setup.
  If a SIM with ECC file is inserted, 112 and 911 and all additional call numbers stored in the ECC file cause an emergency call setup.
  If a SIM without or empty ECC file is inserted, call numbers 112 and 911 and in addition all call numbers specified with AT^SCFG, "Call/ECC", parameter <ecc> will cause an emergency call setup.

7.3 ATD><mem><n> Mobile originated call using specific memory and index number

ATD><mem><n> can be used to set up an outgoing call to the specified number. The termination character ";" shall be added when a voice call is originated.

Syntax

Exec Command

ATD><mem><n>[<mgsm>][;]

Response(s)

If successfully connected and non-voice call (ME switches to online data mode):
CONNECT <text>
If voice call and command input completed:
OK
If no dialtone (parameter setting ATX3 or ATX4):
NO DIALTONE
If busy (parameter setting ATX3 or ATX4):
BUSY
If connection cannot be set up:
NO CARRIER
NO ANSWER
ERROR
+CME ERROR: <err>

PIN	✈	Last
+	-	-

Reference(s)

ITU-T V.250 [15]

Parameter Description

<mem>(text)

Phonebook storage:
For detailed description of storages see AT+CPBS.

FD	Fixed Dialing phonebook
SM	SIM phonebook
LD	Last number Dialed phonebook

<n>(num)

Integer type memory location in the range of locations available in the selected memory, i.e. the index number returned by AT+CPBR.

<mgsm>(str)

String of GSM modifiers:
I Activates CLIR (disables presentation of own phone number to called party, if no *#31#-code is within the dial string)
i Deactivates CLIR (enables presentation of own phone number to called party, if no *#31#-code is within the dial string)

Examples

EXAMPLE 1

To query the location number of the phonebook entry:

```
AT+CPBR=1,xx
```

TA returns the entries available in the active phonebook.

EXAMPLE 2

To dial a number from the SIM phonebook, for example the number stored to location 15:

```
ATD>SM15;
OK
```

EXAMPLE 3

To dial a phone number stored in the last dial memory on the SIM card:

```
ATD>LD9;
OK
```

7.4 ATD><n> Mobile originated call from active memory using index number

ATD><n> can be used to set up an outgoing call to the stored number. The termination character ";" shall be added when a voice call is originated.

Syntax

Exec Command

ATD><n>[<mgsm>][;]

Response(s)

If successfully connected and non-voice call (ME switches to online data mode):
CONNECT <text>
If voice call and command input is completed:
OK
If no dialtone (parameter setting ATX3 or ATX4):
NO DIALTONE
If busy (parameter setting ATX3 or ATX4):
BUSY
If connection cannot be set up:
NO CARRIER
NO ANSWER
ERROR
+CME ERROR: <err>

PIN	✈	Last
+	-	-

Reference(s)

ITU-T V.250 [15]

Parameter Description

<n>(num)

Integer type memory location in the range of locations available in the selected memory, i.e. the index number returned by AT+CPBR.

<mgsm>(str)

String of GSM modifiers:
I Activates CLIR (disables presentation of own phone number to called party)
i Deactivates CLIR (enables presentation of own phone number to called party)

Note

- Parameter <mgsm> only if no *# code is within the dialing string.

7.5 ATD><str> Mobile originated call from active memory using corresponding field

ATD><str> searches the active phonebook for a given string <str> and dials the assigned phone number. The termination character ";" shall be added when a voice call is originated.

Syntax

Exec Command

ATD><str>[<mgsm>][;]

Response(s)

If successfully connected and non-voice call (ME switches to online data mode):
CONNECT <text>
If voice call and command input is completed:
OK
If no dialtone (parameter setting ATX3 or ATX4):
NO DIALTONE
If busy (parameter setting ATX3 or ATX4):
BUSY
If connection cannot be set up:
NO ANSWER
NO CARRIER
ERROR
+CME ERROR: <err>

PIN	Last
+	-

Reference(s)

ITU-T V.250 [15]

Parameter Description

<str>(str)(+CSCS)

String type value ("x") that should equal an alphanumeric field in at least one phonebook entry in the searched memories; used character set should be the one selected with AT+CSCS. <str> can contain escape sequences as described in chapter "Supported character sets".
If AT+CSCS is set to "UCS2", with respect to the coding of UCS2-characters only phonebook entries that contain an alphanumeric string with a size less than the half of the parameter <tlength> from AT+CPBW can be dialed.

<mgsm>(str)

String of GSM modifiers:
I Activates CLIR (disables presentation of own phone number to called party, if no *#31#-code is within the dial string)
i Deactivates CLIR (enables presentation of own phone number to called party, if no *#31#-code is within the dial string)

Note

- Parameter <mgsm> only if no *# code is within the dialing string.

7.6 ATDL Redial last number used

ATDL redials the last voice and data call number used in the ATD command. If terminated with semicolon ";" ATDL dials the last voice call number stored in the "LD" phonebook. Otherwise, ATDL dials the last data call number (not contained in the "LD" phonebook).

Syntax

Exec Command

ATDL[;]

Response(s)

If successfully connected and non-voice call (ME switches to online data mode):

CONNECT <text>

If voice call and command input is completed:

OK

If no dialtone (parameter setting ATX3 or ATX4):

NO DIALTONE

If busy (parameter setting ATX3 or ATX4):

BUSY

If connection cannot be set up:

NO CARRIER

NO ANSWER

ERROR

+CME ERROR: <err>

PIN	✈	Last
+	-	-

Reference(s)

ITU-T V.250 [15]

7.7 ATH Disconnect existing connection

ATH releases all active calls and held calls, but not waiting calls.

Syntax

Exec Command
ATH[<n>]
Response(s)
OK

PIN	✈	Last
-	-	-

Reference(s)
ITU-T V.250 [15]

Parameter Description

<n>(num)	
[0]	Disconnect from command line and terminate call

Note

- ATH terminates every circuit switched call (voice, data), even if it is issued via another interface. This behavior is in accordance with ITU-T V.250; (07/97, "Hook control": "ATH is terminating any call in progress.").

7.8 AT+CHUP Hang up call

AT+CHUP releases all active calls, but neither waiting nor held calls.

Syntax

Test Command
AT+CHUP=?
Response(s)
OK ERROR +CME ERROR: <err>

Exec Command
AT+CHUP
Response(s)
OK ERROR +CME ERROR: <err>

PIN ✈	Last
+	-

Reference(s)
3GPP TS 27.007 [44]

7.9 AT^SHUP Hang up call(s) indicating a specific 3GPP TS 24.008 release cause

The AT^SHUP write command terminates calls known to the ME and indicates a specific 3GPP TS 24.008 [39] release cause specified by the user. The command can be used for voice and data calls. Calls will be terminated regardless of their current call status, which may be any of the states listed with AT+CLCC.

Syntax

Test Command

```
AT^SHUP=?
```

Response(s)

```
OK
```

Write Command

```
AT^SHUP=<cause>[, <cn>]
```

Response(s)

```
OK
ERROR
```

PIN	✈	Last
+	-	-

Parameter Description

<cause>(num)

Release cause

3GPP TS 24.008 [39] release cause to be indicated to the network.
The EHS6-A will release the selected connection(s) with release cause indication "cause" and location "user" (0) in the "disconnect" protocol message to the network. It depends on the network whether or not the release cause will be forwarded to the remote party.

1	Send 3GPP TS 24.008 [39] release cause "unassigned (unallocated) number"
16	Send 3GPP TS 24.008 [39] release cause "normal call clearing "
17	Send 3GPP TS 24.008 [39] release cause "user busy "
18	Send 3GPP TS 24.008 [39] release cause "no user responding "
27	Send 3GPP TS 24.008 [39] release cause "destination out of order "
31	Send 3GPP TS 24.008 [39] release cause "normal, unspecified"

<cn>(num)

Call number

The "call number" is an optional index used in the list of current calls indicated by AT+CLCC. The AT^SHUP command will terminate the call identified by the given call number. The default call number "0" is not assigned to any call, but signifies "all calls". As "0" is the default value, it may be omitted.

[0]	Terminate all known calls.
1...7	Terminate the specific call number <cn>.

7.10 ATS0 Set number of rings before automatically answering a call

ATS0 controls the automatic answering feature for data calls. The setting is global for all interfaces, but an incoming call is answered only on the interface where the ATS0 write command was executed most recently. An exception is the second serial interface ASC1: Take care not to activate autoanswering on ASC1, because on this interface calls might be autoanswered regardless whether the connection can be handled.
The write command is SIM PIN protected, the read command is not.

Syntax

Read Command
ATS0?
Response(s)
<n> OK ERROR

Write Command
ATS0=<n>
Response(s)
OK ERROR

PIN	✈	Last
±	-	-

Reference(s)
ITU-T V.250 [15]

Parameter Description

<n>(num)(&V)(&W)	
000(&F)(D)	Automatic answer mode is disabled.
001-255	Enable automatic answering after specified number of rings.

7.11 ATO Switch from command mode to data mode / PPP online mode

ATO is the corresponding command to the +++ escape sequence: If the ME is in command mode during a data connection ATO causes the ME to return to data mode.

Syntax

Exec Command

ATO[<n>]

Response(s)

If connection is not successfully resumed:
NO CARRIER
or
TA returns to data mode from command mode
CONNECT <text>
Note: <text> output only if ATX parameter setting with value > 0.

PIN	✈	Last
-	-	-

Reference(s)

ITU-T V.250 [15]

Parameter Description

<n>(num)

[0]	Switch from command mode to data mode

7.12 +++ Switch from data mode or PPP online mode to command mode

+++ escape sequence is only available during a circuit switched data (CSD) call or a packet switched connection. The +++ character sequence causes the EHS6-A to pause data mode and return to AT command mode. This allows to enter AT commands while maintaining the data connection to the remote device. By the way the same task can be performed by toggling the DTR line if AT&D is set to 1. ATO is used to resume data or PPP online mode.
To prevent the +++ character sequence from being misinterpreted as data, it must be preceded and followed by a pause of at least 1000 ms. The +++ characters must be entered in quick succession, all within 1000 ms.

Syntax

Exec Command
+++
Response(s)
OK

PIN ✈	Last
-	-

Reference(s)
ITU-T V.250 [15]

Note

- To return from command mode to data or PPP online mode: Enter ATO.

7.13 AT+CBST Select Bearer Service Type

AT+CBST write command selects the bearer service <name>, the data rate <speed> and the connection element <ce> to be used when data calls are originated. The settings are global for all interfaces, and also apply to mobile terminated data calls. See 3GPP TS 22.002 [23] for a list of allowed combinations of subparameters.

Syntax

Test Command

AT+CBST=?

Response(s)

+CBST: (list of supported<speed>s), (list of supported<name>s), (list of supported<ce>s)
OK

Read Command

AT+CBST?

Response(s)

+CBST: <speed>, <name>, <ce>
OK

Write Command

AT+CBST=<speed>[, <name>[, <ce>]]

Response(s)

OK
ERROR

PIN	✈	Last
-	+	-

Reference(s)

3GPP TS 27.007 [44],
3GPP TS 22.002 [23]

Parameter Description

<speed>(num)(&V)(&W)	
0	Automatic Speed Selection
4	2400 bps (V.22bis)
6	4800 bps (V.32)
7(&F)	9600 bps (V.32)
68	2400 bps (V.110)
70	4800 bps (V.110)
71(P)	9600 bps (V.110)

<name>(num)(&W)	
0(&F)	Asynchronous modem (UDI or 3.1 kHz modem)
1	Synchronous modem (UDI or 3.1 kHz modem)
4	Asynchronous modem (RDI)
5	Synchronous modem (RDI)

<ce>(num)(&W)	
Transparent mode is not supported.	
1(&F)	Non-transparent

7.14 AT+CSTA Select type of address

Set command selects the type of number for further dialing commands ATD according to 3GPP Technical Specifications.

Syntax

Test Command

```
AT+CSTA=?
```

Response(s)

```
+CSTA: (list of supported<type>s)
OK
```

Read Command

```
AT+CSTA?
```

Response(s)

```
+CSTA: <type>
OK
```

Write Command

```
AT+CSTA=<type>
```

Response(s)

```
OK
ERROR
```

PIN	✈	Last
-	+	-

Reference(s)

3GPP TS 27.007 [44]

Parameter Description

<type>(num)	
145	When dialing string includes international access code character "+"
129	Otherwise

7.15 AT+CRLP Configure RLP Parameters for Outgoing Non-Transparent Data Calls

The AT+CRLP write command sets radio link protocol (RLP) parameters used when non-transparent data calls are originated. The read command returns the current settings for the supported RLP version 0.

Syntax

Test Command

AT+CRLP=?

Response(s)

+CRLP: (list of supported<iws>s), (list of supported<mws>s), (list of supported<T1>s), (list of supported<N2>s)
OK

Read Command

AT+CRLP?

Response(s)

+CRLP: <iws>, <mws>, <T1>, <N2>
OK

Write Command

AT+CRLP=[<iws>[, <mws>[, <T1>[, <N2>]]]]

Response(s)

OK
ERROR
+CME ERROR: <err>

PIN	✈	Last
-	+	-

Reference(s)

3GPP TS 27.007 [44]

Parameter Description

<iws>(num)(&V)(&W)

Interworking window size (IWF to MS)

0...61(&F)

<mws>(num)(&V)(&W)

Mobile window size (MS to IWF)

0...61(&F)

<T1>(num)(&V)(&W)

Acknowledgement timer (T1 in 10 ms units)

48...[78](&F)...255

<N2>(num)(&V)(&W)

Re-transmission attempts N2

1...6(&F)...255

7.16 AT+CLCC List of current calls

The execute command lists all current calls. If the command is successful, but no calls are available, no information response is sent to TE.

Syntax

Test Command

```
AT+CLCC=?
```

Response(s)

```
OK
```

Exec Command

```
AT+CLCC
```

Response(s)

```
[+CLCC: <idx>, <dir>, <stat>, <mode>, <mpty>[, <number>, <type>[, <alpha>]]]
[+CLCC: <idx>, <dir>, <stat>, <mode>, <mpty>[, <number>, <type>[, <alpha>]]]
[+CLCC: ...]
OK
ERROR
+CME ERROR: <err>
```

PIN	✈	Last
+	-	-

Reference(s)

3GPP TS 27.007 [44]

Parameter Description

<idx>(num)

Call identification number as described in subclause 6.5.5.1 of 3GPP TS 22.030 [25]. This number can be used in AT+CHLD command operations

<dir>(num)

0	Mobile originated call (MOC)
1	Mobile terminated call (MTC)

<stat>(num)

State of the call

0	Active
1	Held
2	Dialing (MOC)
3	Alerting (MOC)
4	Incoming (MTC)
5	Waiting (MTC)

<mode>(num)

Bearer/teleservice

0	Voice
1	Data

3	Voice followed by data, voice mode
9	Unknown

<mpty>(num)

0	Call is not one of multiparty (conference) call parties
1	Call is one of multiparty (conference) call parties

<number>(str)

Phone number in format specified by <type>

<type>(num)

Type of address octet as defined by 3GPP TS 24.008 [39], subclause 10.5.4.7. For possible values see the <type> parameters specified for phonebook related AT commands, for example AT+CPBR and AT+CPBW.

145	Dialing string <number> includes international access code character '+'
161	National number
128	Number is restricted
129	Otherwise

<alpha>(str)(+CSCS)

Alphanumeric representation of <number> corresponding to the entry found in phonebook (see for example AT+CPBW, parameter <text>).
Due to time constraints on the necessary evaluation of the phonebook, this parameter may show a default value in early call phases (e.g. for <stat>= "dialing", "incoming" or "alerting"), even if a phonebook entry is present for the number concerned.

7.17 AT^SXCALLSTAT Set Reporting Call Status

AT^SXCALLSTAT enables / disables voice call status reporting using an unsolicited result code. The URC may be repeated so that for each call one line is displayed.

Syntax

Test Command

AT^SXCALLSTAT=?

Response(s)

^SXCALLSTAT: (list of supported<n>s)
OK

Read Command

AT^SXCALLSTAT?

Response(s)

^SXCALLSTAT: <n>
OK

Write Command

AT^SXCALLSTAT=[<n>]

Response(s)

OK
ERROR
+CME ERROR: <err>

PIN	✈	Last
+	-	-

Unsolicited Result Code

Unsolicited Call Status information

^SXCALLSTAT: <n>, <stat>

URC "^SXCALLSTAT" displays the current call state. The state is displayed in the state it has at the time of display, not in the state it had when the signal was generated.

Parameter Description

<n>(num)

[0]	Presentation of URC "^SXCALLSTAT" disabled
1	Presentation of URC "^SXCALLSTAT" enabled

<idx>(num)

Call identification number

<stat>(num)

State of the call

0	Active
1	Held
2	Dialing (MOC)
3	Alerting (MOC)

4	Incoming (MTC)
5	Waiting (MTC)
6	Disconnected
7	Connected (indicates the completion of a call setup first time for MT and MO calls, this is reported in addition to state active)

7.18 AT+CR Service reporting control

AT+CR configures the TA whether or not to transmit an intermediate result code +CR: <serv> to the TE when a call is being set up.
Setting the value of <mode> to 1 may lead to connection failure, if the TE waits for default result code/URC.

Syntax

Test Command

AT+CR=?

Response(s)

+CR: (list of supported<mode>s)
OK
ERROR

Read Command

AT+CR?

Response(s)

+CR: <mode>
OK
ERROR

Write Command

AT+CR=<mode>

Response(s)

OK
ERROR

PIN	✈	Last
+	+	-

Reference(s)

3GPP TS 27.007 [44]

Intermediate Result Code

If enabled, an intermediate result code is transmitted during connect negotiation when the TA has determined the speed and quality of service to be used, before any error control or data compression reports are transmitted, and before any final result code (e.g. CONNECT) appears.

+CR: <serv>

Parameter Description

<mode>(num)(&V)(&W)	
0(&F)(P)	Disable
1	Enable

<serv>(str)	
“REL ASYNC“	Asynchronous non-transparent
“GPRS [<L2P>]“	GPRS The optional [<L2P>] proposes a layer 2 protocol to use between ME and TE. It is defined by AT+CGDATA.
“SYNC“	Synchronous transparent
“REL SYNC“	Synchronous non-transparent
“ASYNC“	Asynchronous transparent

7.19 AT+CRC Incoming Call Indication Format

AT+CRC controls the format of the incoming call indication.

Syntax

Test Command

AT+CRC=?

Response(s)

+CRC: (list of supported<mode>s)
OK
ERROR

Read Command

AT+CRC?

Response(s)

+CRC: <mode>
OK
ERROR

Write Command

AT+CRC=[<mode>]

Response(s)

OK
ERROR

PIN	✈	Last
-	+	-

Reference(s)

3GPP TS 27.007 [44]

Unsolicited Result Codes

URC 1

RING

Incoming call indication if <mode>=0.

URC 2

+CRING: <type>

Incoming call indication if <mode>=1.

Parameter Description

<mode>(num)(&V)(&W)	
[0](&F)(P)	Disable extended format.
1	Enable extended format. Using this mode may lead to connection failures, if the Customer Application expects URCs in a another format (e.g. set by default).

<type>(str)	
“REL ASYNC“	Asynchronous non-transparent
“FAX“	Facsimile

“VOICE“	Voice
“GPRS <PDP_Type>,<PDP_addr>[,[<L2P>][,<APN>]]“	GPRS network request for PDP context activation with parameters <PDP_type>, <PDP_addr> [,[<L2P>][,<APN>]]

7.20 AT+CECALL Initiate eCall

The AT+CECALL write command can be used to trigger an eCall to the network. You can either make a test call, a reconfiguration call, a manually initiated eCall or an automatically initiated eCall.
OK or ERROR result code shows up instantly, no matter whether the eCall is established. If the eCall is successfully established, no further result codes will be sent. To get detailed information on all eCall states you can use dedicated indicators enabled with AT^SIND: ecallda, ecallco, ecaller. If voiceprompts are involved it is recommended to enable the AT^SIND indicators related to "voiceprompt".

Syntax

Test Command

```
AT+CECALL=?
```

Response(s)

```
+CECALL: (list of supported <type_of_ecall>s)
OK
```

Read Command

```
AT+CECALL?
```

Response(s)

```
+CECALL: <type_of_ecall>
OK
ERROR
+CME ERROR: <err>
```

Write Command

```
AT+CECALL=<type_of_ecall>[, <ecall_nr>]
```

Response(s)

```
OK
ERROR
+CME ERROR: <err>
```

PIN	✈	Last
-	-	-

Parameter Description

<type_of_ecall>(num)

0(P)	Test eCall (originate voice call)
1	Reconfiguration eCall
2	Manually initiated eCall
3	Automatically initiated eCall

<ecall_nr>(str)

String of dialing digits. Phone number of PSAP test server. If parameter is set, this number will be used for <type_of_ecall>= 0 (Test eCall). Number on SIM will be ignored.

7.21 ATS6 Set pause before blind dialing

ATS6 is implemented for compatibility reasons only, and has no effect.

Syntax

Read Command	
ATS6?	
Response(s)	
<n> OK	

Write Command	
ATS6=<n>	
Response(s)	
OK ERROR	

PIN	✈	Last
-	+	-

Reference(s)
ITU-T V.250 [15]

Parameter Description

<n>(num)(&V)(&W)

000(P)...255

Notes

- Command ATS6 is dummy, and has no effect on module behavior.
- Read command will return value written by user or default value n=0.
- Write command will return OK or ERROR. OK - when parameter <n> is in range, ERROR otherwise.
- Despite OK returned in case of any parameter from range, no changes will be made.
- Parameter is volatile.

7.22 ATS7 Set number of seconds to wait for connection completion

ATS7 is implemented for compatibility reasons only, and has no effect.

Syntax

Read Command	
ATS7?	
Response(s)	
<n> OK	

Write Command	
ATS7=<n>	
Response(s)	
OK ERROR	

PIN	✈	Last
-	+	-

Reference(s)
ITU-T V.250 [15]

Parameter Description

<n>(num)(&V)(&W)

000...060(&F)

Notes

- Command ATS7 is dummy, and has no effect on module behavior.
- Values greater than 60 (maximum 255) cause no error, but<n> will be restored to the maximum value of 60.
- Read command will return value written by user or default value n=60.
- Write command will return OK or ERROR. OK - when parameter <n> is in range, ERROR otherwise.
- Despite OK returned in case of any parameter from range, no changes will be made.
- Parameter is volatile.

7.23 ATS8 Comma Dial Pause Time

ATS8 is implemented for compatibility reasons only, and has no effect.

Syntax

Read Command
ATS8?
Response(s)
<n> OK
Write Command
ATS8=<n>
Response(s)
OK

PIN	✈	Last
-	+	-

Reference(s)
ITU-T V.250 [15]

Parameter Description

<n>(num)(&V)(&W)

000(&F)...255

Notes

- Command ATS8 is dummy, and has no effect on module behavior.
- Read command will return value written by user or default value n=0.
- Write command will return OK or ERROR. OK - when parameter <n> is in range, ERROR otherwise.
- Despite OK returned in case of any parameter from range, no changes will be made.
- Parameter is volatile.

7.24 ATS10 Set disconnect delay after indicating the absence of data carrier

ATS10 is implemented for compatibility reasons only, and has no effect.

Syntax

Read Command

ATS10?

Response(s)

<n>
OK

Write Command

ATS10=<n>

Response(s)

OK
ERROR

PIN	✈	Last
-	+	-

Reference(s)

ITU-T V.250 [15]

Parameter Description

<n>(num)(&V)(&W)

001...002(&F)...254	Number of tenths of seconds to wait before disconnecting after ME has indicated the absence of received line signal

Notes

- Command ATS10 is dummy, and has no effect on module behavior.
- Read command will return value written by user or default value n=2.
- Write command will return OK or ERROR. OK - when parameter <n> is in range, ERROR otherwise.
- Despite OK returned in case of any parameter from range, no changes will be made.
- Parameter is volatile.

8. Network Service Commands

The AT Commands described in this chapter are related to various network services. More commands related to this area can be found in Chapter 9., Supplementary Service Commands.

8.1 AT+COPN Read operator names

The AT+COPN command returns the list of operator names from the ME. Each operator code <numericn> that has an alphanumeric equivalent <alphan> in the ME memory is returned.

Syntax

Test Command

```
AT+COPN=?
```

Response(s)

```
OK
ERROR
+CME ERROR: <err>
```

Exec Command

```
AT+COPN
```

Response(s)

```
+COPN: <numericn>,<alphan>
[+COPN: ...]
OK
ERROR
+CME ERROR: <err>
```

PIN	✈	Last
+	+	-

Reference(s)

3GPP TS 27.007 [44]

Parameter Description

<numericn>(str)

Operator in numeric format

<alphan>(str)

Operator in long alphanumeric format; can contain up to 16 characters.

8.2 AT+COPS Operator Selection

AT+COPS queries the present status of the EHS6-A's network registration and allows to determine whether automatic or manual network selection shall be used.

Three operator selection modes are available:

- Automatic
  EHS6-A searches for the home operator automatically. If successful the EHS6-A registers to the home network. If the home network is not found, EHS6-A goes on searching. If a permitted operator is found, EHS6-A registers to this operator.
  If no operator is found the EHS6-A remains unregistered.
- Manual
  Desired operator can be determined using the AT+COPS write command. If the operator is found, EHS6-A registers to it immediately. If the selected operator is forbidden, the EHS6-A remains unregistered.
- Manual/automatic
  The ME first tries to find the operator determined via AT+COPS write command. If the ME fails to register to this operator, then it starts to select another (permitted) operator automatically.

The AT+COPS test command consists of several parameter sets, each representing an operator present in the network.
Each set contains the following information:

- an integer indicating the availability of the operator,
- long alphanumeric format of the operator's name,
- short alphanumeric format of the operator's name,
- numeric format representation of the operator.
- an integer indicating the acccess technology of the operator.

The list of operators comes in the following order: Home network, networks referenced in SIM and other networks.

The AT+COPS read command returns the current <mode> and the currently selected operator. If no operator is selected, <format> and <opName> are omitted.

The AT+COPS write command forces an attempt to select and register to the network operator. If the selected operator is not available, no other operator will be selected (except <mode>=4). The selected operator name <format> will apply to further read commands, too.

Command settings are effective over all serial interfaces of the EHS6-A.

Syntax

Test Command

```
AT+COPS=?
```

Response(s)

```
+COPS: [list of supported (<opStatus>, long alphanumeric <opName>, short alphanumeric <opName>, numeric <opName>, <AcT>)s ]
OK
ERROR
+CME ERROR:<err>
```

Read Command

```
AT+COPS?
```

Response(s)

```
+COPS:<mode>[, <format>[, <opName>][, <AcT>]]
OK
ERROR
+CME ERROR:<err>
```

Write Command

AT+COPS=<mode>[, <format>[, <opName>][, <AcT>]]

Response(s)

OK
ERROR
+CME ERROR:<err>

PIN	✈	Last
±	-	-

Reference(s)

3GPP TS 27.007 [44]

Parameter Description

<opStatus>(num)

Operator Status

0	Unknown operator
1	Operator available
2	Current operator (registered)
3	Operator forbidden

<opName>(str)(&V)

Operator Name

If test command: Operator name in long and short alphanumeric format and numeric format.
If read command: Operator name as per <format>.
If write command: Operator name in numeric format.

<mode>(num)(&V)

0	Automatic mode; <opName> field is ignored. Default after SIM PIN authentication has completed and "+PBREADY" URC has shown up. See also <mode>=2.
1	Manual operator selection Write command requires <opName> in numeric format, i.e. <format> shall be 2. Read command returns the current <mode> and the currently selected <opName>. If no operator is selected, <format> and <opName> are omitted.
2(P)	Manually deregister from network and remain unregistered until <mode>=0 or 1 or 4 is selected. Please keep in mind that the AT+COPS write command is SIM PIN protected. When SIM PIN is disabled or after SIM PIN authentication has completed and "+PBREADY" URC has shown up the powerup default <mode>=2 automatically changes to <mode>=0, causing the ME to select a network.
3	Set only <format> (for AT+COPS read command).
4	Automatic / manual selection; if manual selection fails, automatic mode (<mode>=0) is entered (<opName> field will be present).

<format>(num)(&V)(&W)

Parameter is global for all instances.

0(&F)(D)	Long alphanumeric format of <opName>. Allows up to 16 characters for <opName>.

1	Short alphanumeric format of <opName>. Allows up to 8 characters for <opName>.
2	Numeric format of <opName>. This is the GSM Location Area Identification (LAI) number, which consists of the 3-digit Mobile Country Code (MCC) plus the 2- or 3-digit Mobile Network Code (MNC).

<AcT>(num)(&V)

Radio Access Technology

Indicates the currently used radio access technology. See also AT+CREG for more detailed information on the used radio access technology. To change the radio access technology the AT^SXRAT command can be used.

0	GSM
2	UTRAN

8.3 AT^SXRAT Selection of Radio Access Technology

The AT^SXRAT command forces the selection of the Radio Access Technology (RAT) in the protocol stack. On a later network registration (AT+COPS, AT+CGATT) this setting is used.

The AT^SXRAT write command allows to set the RAT and preferred RAT:

- When the ME is registered, setting only <AcT>=0 or 2 can be used to instantly change the RAT.
- When the ME is not registered and the SIM card is not locked, <AcT>=0 or 2 can be set prior to entering SIM PIN1 in order to determine the RAT before registering.
- When <AcT>=1 is set and the <AcT_pref> setting is changed then the newly selected preferred RAT will be used first for the next registration attempt with AT+COPS. The selected <AcT_pref> setting is stored non-volatile if <AcT>=1. However, depending on network capability, it is possible that the ME changes to the non-preferred RAT if this more suitable.

In Airplane mode (AT+CFUN=4) the AT^SXRAT read and test command can be used, but not the write command.

Syntax

Test Command

```
AT^SXRAT=?
```

Response(s)

```
^XRAT:[list of present operator(<AcT>, list of present operator(<AcT_pref>]
OK
ERROR
+CME ERROR: <err>
```

Read Command

```
AT^SXRAT?
```

Response(s)

```
^SXRAT:<AcT>, <AcT_pref>
OK
ERROR
+CME ERROR:<err>
```

Write Command

```
AT^SXRAT=<AcT>[, <AcT_pref>]
```

Response(s)

```
OK
ERROR
+CME ERROR:<err>
```

PIN	✈	Last
-	±	-

Parameter Description

<AcT>(num)	
Access technology	
0	GSM
1(P)	GSM / UMTS dual mode If this mode is selected additionally a preferred RAT can be configured, which is stored in NVRAM selecting which RAT shall be attached first. In dual mode, GSM and UMTS Access Technology will be active and full Inter-RAT measurements and handovers are provided.
2	UTRAN

<AcT_pref>(num)	
Access technology preferred	
This parameter is stored in NVRAM and used for next network registration in case of <AcT>=1.	
0	RAT GSM
2(D)	RAT UMTS

8.4 AT^SXEONS Display EONS Names

AT^SXEONS queries the present status of the EHS6-A's network registration and uses the methods of the Enhanced Operator Name String (EONS) specification for handling operator name strings.
The AT^SXEONS command delivers further information in respect to AT+COPS associated to the EONS operator names, such as EONS short <opName> and EONS long <opName>.

Syntax

Test Command

AT^SXEONS=?

Response(s)

OK
ERROR
+CME ERROR: <err>

Exec Command

AT^SXEONS

Response(s)

^SXEONS: list of present operator (<opStatus>, long alphanumeric <opName>, short alphanumeric <opName>, numeric <opName>[, <AcT>][, EONS long alphanumeric <opName>][, EONS short alphanumeric <opName>])
OK
ERROR
+CME ERROR: <err>

PIN	✈	Last
+	-	-

8.5 AT+CREG Network Registration Status

AT+CREG serves to monitor the EHS6-A's network registration status. Information can be reported by the AT+CREG? read command and by +CREG: URCs.

Syntax

Test Command

AT+CREG=?

Response(s)

+CREG: (list of supported<Mode>s)
OK

Read Command

AT+CREG?

Response(s)

+CREG: <Mode>, <regStatus>[, <netLac>, <netCellId>[, <AcT>]]
OK
ERROR
+CME ERROR: <err>

Write Command

AT+CREG=[<Mode>]

Response(s)

OK
ERROR
+CME ERROR: <err>

PIN	✈	Last
-	+	-

Reference(s)

3GPP TS 27.007 [44]

Unsolicited Result Codes

URC 1

If <Mode>=1 and there is a change in the ME's network registration status:

+CREG: <regStatus>

URC 2

If <Mode>=2 and there is a change of the ME's network registration status or at least one of the additional network information elements:

+CREG: <regStatus>[, <netLac>, <netCellId>[, <AcT>]]

Parameter Description

<Mode>(num)(&V)(&W)	
[0](&F)(D)	Disables +CREG URC. Indication of network registration status +CREG: <regStatus> is possible by AT+CREG? read command.
1	Enables indication of network registration status +CREG: <regStatus> both by AT+CREG? read command and by +CREG URC.
2	Enables extended status information +CREG:<regStatus>[,<net-Lac>,<netCellId>[, <AcT>]], both by read command AT+CREG? and by +CREG URC. Parameters <regStatus>, <netLac>, <netCellId>, <AcT> are only returned when ME is registered to network.

<regStatus>(num)(&V)	
0	Not registered, ME is currently not searching for new operator
1	Registered to home network
2	Not registered, but ME is currently searching for a new operator.
3	Registration denied
4	Unknown (not used)
5	Registered, roaming ME is registered at a foreign network (national or international network)

<netLac>(str)

Two byte location area code in hexadecimal format (e.g. "00C3" equals 195 in decimal).

<netCellId>(str)

Two byte cell ID in hexadecimal format (e.g. "0000A13F")

<AcT>(str)

Radio access technology

“0“	GSM
“2“	UTRAN
“3“	GSM w/EGPRS
“4“	UTRAN w/HSDPA
“5“	UTRAN w/HSUPA
“6“	UTRAN w/HSDPA and w/HSUPA

Example

AT+CREG=2	Activate extended URC mode.
OK	
AT+COPS=0	Force ME to automatically search a network operator.
OK	
+CREG: 2	URC reports that ME is currently searching.
+CREG: 1,"149B","00200EB4",2	URC reports that operator in UMTSnetwork has been found.
AT+COPS?	Check network registration with AT+COPS.
+COPS: 0,0,"Telekom.de",2	
OK	
+CREG: 1,"149B","0020FC9C",2	URC appears again to report that the cellID has changed.

8.6 AT+CSQ Signal quality

The AT+CSQ execute command indicates the received signal strength <rssi> and the channel bit error rate <ber>.

Syntax

Test Command

AT+CSQ=?

Response(s)

+CSQ: (list of supported<rssi>s), (list of supported<ber>s)
OK

Exec Command

AT+CSQ

Response(s)

+CSQ: <rssi>,<ber>
OK

PIN	✈	Last
-	+	-

Reference(s)

3GPP TS 27.007 [44]

Parameter Description

<rssi>(num)

0	-113 dBm or less
1	-111 dBm
2..30	-109... -53 dBm
31	-51 dBm or greater
99	not known or not detectable

According to 3GPP TS 27.007 [44], the <rssi> value is not applicable to 3G networks. It is therefore recommended to use also AT^SMONI which delivers additional information, in particular the values RSCP, EC/n0, SQual and SRxLev RX level. Nevertheless, please consider that connection quality in 3G networks is depending on further factors. For example, despite good RSCP values for signal quality, data throughput may vary depending on the number of subscribers sharing the same cell.

<ber>(num)

To check the bit error rate there must be a dedicated channel opened to obtain realistic values. If no dedicated channel is opened, there is no BER to be determined. In this case the indicated value may be 0 or 99, depending on the SIM card.

0..7	as RXQUAL values in the table in 3GPP TS 45.008 [48] section 8.2.4.
99	not known or not detectable

Note

- The results of AT+CSQ are valid only after the ME has successfully finished network registration. Otherwise, the commands returns only +CSQ: 99,99.

8.7 AT+CPOL Preferred Operator List

AT+CPOL read command queries the list of the preferred operators.
AT+CPOL write command allows to edit the list of the preferred operators.
The response of AT+CPOL read command also depends on the setting of AT+CPLS.
If <index> is given but <operator> is left out, the entry is deleted.

Syntax

Test Command

AT+CPOL=?

Response(s)

+CPOL: (list of supported <index>s), (list of supported <format>s)
OK
ERROR
+CME ERROR: <err>

Read Command

AT+CPOL?

Response(s)

+CPOL: <index>, <format>, <operator>[, <gsm>, <gsm_compact>, <utran>]
+CPOL: ...
OK
ERROR
+CME ERROR: <err>

Write Command

AT+CPOL=[<index>][, <format>[[, <operator>][, <gsm>, <gsm_compact>, <utran>]]]

Response(s)

OK
ERROR
+CME ERROR: <err>

PIN	✈	Last
+	+	-

Reference(s)

3GPP TS 27.007 [44]

Parameter Description

<index>(num)

The order number of the operator in the SIM preferred operator list.

<format>(num)

0	Long alphanumeric format <operator>
1	Short alphanumeric format <operator>
2	Numeric format <operator>

<operator>(str)

The operator in the format specified in <format>.

<gsm>(num)	
0	AcT GSM disabled
1	AcT GSM enabled

<gsm_compact>(num)	
0	AcT GSM Compact disabled

<utran>(num)	
0	AcT UTRAN disabled
1	AcT UTRAN enabled

Note

- The Access Technology selection parameters <gsm>, <gsm_compact>, <utran> are required for SIM cards or UICCs containing PLMN selector with Access Technology.

8.8 AT+CPLS Select Preferred Operator List

AT+CPLS is used to select a preferred PLMN list defined in Elementary Files of the SIM card or active application of the USIM. The setting takes effect for the AT+CPOL command.

Syntax

Test Command

AT+CPLS=?

Response(s)

+CPLS: (list of USIM supported <plmn-selector>s)
OK

Read Command

AT+CPLS?

Response(s)

+CPLS: <plmn-selector>
OK
ERROR
+CME ERROR: <err>

Write Command

AT+CPLS=[<plmn-selector>]

Response(s)

OK
ERROR
+CME ERROR: <err>

PIN	Last
+	-

Reference(s)

3GPP TS 27.007 [44]

Parameter Description

<plmn-selector>(num)	
0(P)	User controlled PLMN with $EF_{PLMNwAcT}$/$EF_{PLMNsel}$ If <plmn-selector> is omitted from the write command, the default value 0 is used instead.
1	Operator controlled PLMN selector with $EF_{OPLMNwAcT}$
2	HPLMN selector with $EF_{HPLMNwAcT}$

8.9 AT+CTZR Time Zone Reporting

The AT+CTZR command enables and disables event reporting for changes of time zone and daylight saving time. If reporting is enabled the EHS6-A returns unsolicited result codes whenever the time zone changes.

Syntax

Test Command

```
AT+CTZR=?
```

Response(s)

```
+CTZR:(list of supported <mode>s)
OK
```

Read Command

```
AT+CTZR?
```

Response(s)

```
+CTZR: <mode>
OK
ERROR
+CME ERROR: <err>
```

Write Command

```
AT+CTZR=<mode>
```

Response(s)

```
OK
ERROR
+CME ERROR: <err>
```

PIN	✈	Last
-	+	-

Reference(s)

3GPP TS 27.007 [44]

Unsolicited Result Codes

URC 1

```
+CTZV: <timezone>, <time>
```

The URC indicates that the time zone has changed.

URC 2

```
+CTZV: <dst>
```

The URC provides information on daylight saving time.

URC 3

```
+NITZINFO: <timezone_variance>, <time>
```

The URC provides information on daylight saving time.

Parameter Description

<mode>(num)	
0(P)	Disable event reporting by URCs
1	Enable time event reporting by URCs

<timezone>(num)

Integer value indicating the time zone

<time>(str)

Time in format "yy/MM/dd,hh:mms", wherein characters indicates year, month, day, hour, minutes, seconds.

<dst>(num)

Parameter indicates daylight saving time as follows:

0	No adjustment for daylight daving time
1	+1 hour adjustment for daylight saving time
2	+2 hour adjustment for daylight saving time

<timezone_variance>(str)

Timezone variance

Time in format "GMT+HH:MM" or "GMT-HH:MM", e.g. "GMT+5:30".

8.10 AT+CTZU Automatic Time Zone Update

The AT+CTZU command enables and disables automatic time zone update via NITZ. In addition, AT+CTZR can be used to activate indicators reporting time zone information change.

Syntax

Test Command

```
AT+CTZU=?
```

Response(s)

```
+CTZU:(list of supported <mode>s)
OK
```

Read Command

```
AT+CTZU?
```

Response(s)

```
+CTZU: <mode>
OK
ERROR
+CME ERROR: <err>
```

Write Command

```
AT+CTZU=<mode>
```

Response(s)

```
OK
ERROR
+CME ERROR: <err>
```

PIN	✈	Last
-	+	-

Reference(s)

3GPP TS 27.007 [44]

Parameter Description

<mode>(num)	
0(P)	Disable automatic time zone update via NITZ
1	Enable automatic time zone update via NITZ.

8.11 AT^SGCOPS Operator Selection for GPRS-ONLY SIM Cards

AT^SGCOPS has been designed for use with GPRS-ONLY SIM cards. Intended only for PS data connectivity GPRS-ONLY SIM cards do not support registering to CS services. As a result, the standard command AT+COPS is not fully usable for GPRS-ONLY SIM cards: Despite successful registration to PS domain services the AT+COPS? read command returns "+COPS: 2" and the AT+COPS write command returns an error message ("+CME ERROR: SIM WRONG").

Therefore, for GPRS-ONLY SIM cards, please use AT^SGCOPS instead of AT+COPS. The command syntax of the AT^SGCOPS read and write commands is identical with AT+COPS. See AT+COPS for parameter descriptions.

Syntax

Read Command

```
AT^SGCOPS?
```

Response(s)

```
^SGCOPS:<mode>[, <format>[, <opName>][, <AcT>]]
OK
ERROR
+CME ERROR:<err>
```

Write Command

```
AT^SGCOPS=<mode>[, <format>[, <opName>][, <AcT>]]
```

Response(s)

```
OK
ERROR
+CME ERROR:<err>
```

PIN	✈	Last
±	-	-

8.12 AT^SMONI Monitoring Serving Cell

The AT^SMONI command supplies information of the serving cell.

Syntax

Test Command

AT^SMONI=?

Response(s)

OK

Exec Command

AT^SMONI

Response(s)

See: Section 8.12.1, AT^SMONI Responses

OK

Write Command

AT^SMONI=255

Response(s)

See: Section 8.12.2, AT^SMONI Enhanced Responses

OK

ERROR

+CME ERROR: <err>

PIN	✈	Last
-	-	-

Notes

- The parameters LAC and cell are presented as hexadecimal digits, the remaining parameters are composed of decimal digits.
- If the BS supports frequency hopping during a connection, the dedicated channel (ARFCN) is not stable. This mode is indicated by chann = 'h'.
- It may happen for a short time that following parameters have no values after an inter-system change from GSM to UMTS: EC/n0, RSCP, SQual and SRxLev. In this case these parameter values are displayed with the "-" character.
- The service state 'SEARCH' (Searching) could mean a PLMN search or a cell search. This can also happen for a short time when ME is leaving connected mode.

8.12.1 AT^SMONI Responses

ME is not connected:

- ME is camping on a GSM (2G) cell:

```
Syntax:
^SMONI: ACT,ARFCN,BCCH,MCC,MNC,LAC,cell,C1,C2,NCC,BCC,GPRS,ARFCN,TS,timAdv,dBm,Q,ChMod
Example:
^SMONI: 2G,71,-61,262,02,0143,83BA,33,33,3,6,G,NOCONN
```

- ME is camping on a UMTS (3G) cell:

```
Syntax:
^SMONI: ACT,UARFCN,PSC,EC/n0,RSCP,MCC,MNC,LAC,cell,SQual,SRxLev,PhysCh, SF,Slot,EC/
n0,RSCP,ComMod,HSUPA,HSDPA
```

```
Example:
^SMONI: 3G,10564,296,-7.5,-79,262,02,0143,00228FF,-92,-78,NOCONN
```

- ME is searching and could not (yet) find a suitable GSM (2G) cell:

```
Syntax:
^SMONI: ACT,ARFCN,BCCH,MCC,MNC,LAC,cell,C1,C2,NCC,BCC,GPRS,ARFCN,TS,timAdv,dBm,Q,ChMod
Example:
^SMONI: 2G,SEARCH,SEARCH
```

- ME is searching and could not (yet) find a suitable UMTS (3G) cell:

```
Syntax:
^SMONI: ACT,UARFCN,PSC,EC/n0,RSCP,MCC,MNC,LAC,cell,SQual,SRxLev,PhysCh, SF,Slot,EC/
n0,RSCP,ComMod,HSUPA,HSDPA
Example:
^SMONI: 3G,SEARCH,SEARCH
```

ME is connected (call in progress):

- GSM (2G) cell:

```
Syntax:
^SMONI: ACT,ARFCN,BCCH,MCC,MNC,LAC,cell,C1,C2,NCC,BCC,GPRS,ARFCN,TS,timAdv,dBm,Q,ChMod
Example:
^SMONI: 2G,673,-80,262,07,4EED,A500,35,35,7,4,G,643,4,0,-80,0,S_FR
```

- UMTS (3G) cell:

```
Syntax:
^SMONI: ACT,UARFCN,PSC,EC/n0,RSCP,MCC,MNC,LAC,cell,SQual,SRxLev,PhysCh, SF,Slot,EC/
n0,RSCP,ComMod,HSUPA,HSDPA
Example:
^SMONI: 3G,10737,131,-5,-93,260,01,7D3D,C80BC9A,21,11,EDCH,256,4,-5,-93,0,01,06
```

Columns for GSM (2) Serving Cell parameters:

Column	Description
ACT	Access Technology
ARFCN	ARFCN (Absolute Radio Frequency Channel Number) of the BCCH carrier
BCCH	Receiving level of the BCCH carrier in dBm (level is limited from -110dBm to -47dBm)
MCC	Mobile Country Code (first part of the PLMN code)
MNC	Mobile Network Code (second part of the PLMN code)
LAC	Location Area Code
cell	Cell ID
C1	Coefficient for base station selection
C2	Coefficient for base station selection
NCC	PLMN colour code
BCC	Base station colour code
GPRS	GPRS state

Columns for UMTS (3G) Serving Cell parameters:

Column	Description
ACT	Access Technology
UARFCN	UARFCN (UTRAN Absolute Radio Frequency Channel Number) of the BCCH carrier
PSC	Primary Scrambling Code
EC/n0	Carrier to noise ratio in dB = measured Ec/Io value in dB. Please refer to 3GPP 25.133, section 9.1.2.3, Table 9.9 for details on the mapping from EC/n0 to EC/Io.
RSCP	Received Signal Code Power in dBm
MCC	Mobile Country Code (first part of the PLMN code)
MNC	Mobile Network Code (second part of the PLMN code)
LAC	Location Area Code
cell	Cell ID
SQual	Quality value for base station selection in dB (see 3GPP 25.304)
SRxLev	RX level value for base station selection in dB (see 3GPP 25.304)

Columns for UMTS (3) Dedicated Channel parameters:
Note: Physical channels in downlink are considered.

Column	Description
PhysCh	Physical Channel Type (DPCH, FDPCH)
SF	Spreading Factor (4,8,16,32,64,128,256,512)
Slot	Slot Format for DPCH (0-16) (see 3GPP TS 25.211 V7.10.0 Table 11) Slot Format for FDPCH (0-9) (see 3GPP TS 25.211 V7.10.0 Table 16C)
EC/n0	Carrier to noise ratio in dB
RSCP	Received Signal Code Power in dBm
ComMod	Compressed Mode (0-1) (indicates valid transmission gap pattern)
HSUPA	HSUPA Status (a.k.a. E-DCH Status) indicated by xy: x = Cell Capability Indicator: 0 - HSUPA capability not indicated, 1 - HSUPA Capable Cell. Please consider that some providers/MNOs don't support this flag and that it is provided "for display indication only", see 3GPP TS 25.331 [41] (later than version 6.9.0) section 10.2.48.8.8. y = ME Call Status: 0 - HSUPA inactive, 1 - HSUPA active
HSDPA	HSDPA Status indicated by xy: x = Cell Capability Indicator: 0 - HSDPA capability not indicated, 1 - HSDPA Capable Cell. Please consider that some providers/MNOs don't support this flag and that it is provided "for display indication only", see 3GPP TS 25.331 [41] (later than version 6.8.0), section 10.2.48.8.8. y = ME Call Status: 0 - HSDPA inactive, 1 - HSDPA suspended, 2 - HSDPA active

8.12.2 AT^SMONI Enhanced Responses

The AT^SMONI=255 write command supplies information of the serving and dedicated cell.

ME is not connected:

- ME is camping on a GSM (2G) cell and registered to the network:

```
Syntax:
^SMONI:
ACT,ARFCN,BCCH,MCC,MNC,LAC,cell,C1,C2,NCC,BCC,GPRS,PWR,RXLev,ARFCN,TS,timAdv,dBm,Q,ChM
od
Example:
^SMONI: 2G,990,-75,262,03,0139,02C9,28,28,3,0,G,0,-104,NOCONN
```

- ME is camping on a UMTS (3G) cell and registered to the network:

```
Syntax:
^SMONI: ACT,UARFCN,PSC,EC/n0,RSCP,MCC,MNC,LAC,cell,SQual,SRxLev,PhysCh, SF,Slot,EC/
n0,RSCP,ComMod,HSUPA,HSDPA
Example:
^SMONI: 3G,10737,131,-7.5,-103,260,01,7D3D,C80BC9A,21,11,NOCONN
```

- ME is camping on a GSM cell but not registered to the network (only emergency call allowed):

```
Syntax:
^SMONI:
ACT,ARFCN,BCCH,MCC,MNC,LAC,cell,C1,C2,NCC,BCC,GPRS,PWR,RXLev,ARFCN,TS,timAdv,dBm,Q,ChM
od
Example:
^SMONI: 2G,673,-89,262,07,4EED,A500,16,16,7,4,G,5,-107,LIMSRV
```

- ME is camping on a UMTS cell but not registered to the network (only emergency call allowed):

```
Syntax:
^SMONI: ACT,UARFCN,PSC,EC/n0,RSCP,MCC,MNC,LAC,cell,SQual,SRxLev,PhysCh, SF,Slot,EC/
n0,RSCP,ComMod,HSUPA,HSDPA
Example:
^SMONI: 3G,10564,96,-7.5,-79,262,02,0143,00228FF,-92,-78,LIMSRV
```

ME is connected (call in progress):

- GSM (2G) cell:

```
Syntax:
^SMONI:
ACT,ARFCN,BCCH,MCC,MNC,LAC,cell,C1,C2,NCC,BCC,GPRS,PWR,RXLev,ARFCN,TS,timAdv,dBm,Q,ChM
od
Example:
^SMONI: 2G,852,-80,262,03,4E2D,6C2D,28,32,3,5,E,0,-104,816,1,3,-71,0,A_FR
```

- UMTS (3G) cell:

```
Syntax:
^SMONI: ACT,UARFCN,PSC,EC/n0,RSCP,MCC,MNC,LAC,cell,SQual,SRxLev,PhysCh, SF,Slot,EC/
n0,RSCP,ComMod,HSUPA,HSDPA
Example:
^SMONI: 3G,10737,131,-5,-93,260,01,7D3D,C80BC9A,21,11,DPCH,256,4,-5,-93,0,00,00
```

Columns for GSM (2G) Serving Cell parameters:

Column	Description
ACT	Access Technology
ARFCN	ARFCN (Absolute Radio Frequency Channel Number) of the BCCH carrier
BCCH	Receiving level of the BCCH carrier in dBm (level is limited from -110dBm to -47dBm)
MCC	Mobile Country Code (first part of the PLMN code)

Column	Description
MNC	Mobile Network Code (second part of the PLMN code)
LAC	Location Area Code
cell	Cell ID
C1	Coefficient for base station selection
C2	Coefficient for base station selection
NCC	PLMN colour code
BCC	Base station colour code
GPRS	GPRS state
PWR	Maximal power level used on RACH channel in dBm
RxLev	Minimal receiving level (in dBm) to allow registration

Columns for UMTS (3G) Serving Cell parameters:

Column	Description
ACT	Access Technology
UARFCN	UARFCN (UTRAN Absolute Radio Frequency Channel Number) of the BCCH carrier
PSC	Primary Scrambling Code
EC/n0	Carrier to noise ratio in dB = measured Ec/Io value in dB. Please refer to 3GPP 25.133, section 9.1.2.3, Table 9.9 for details on the mapping from EC/n0 to EC/Io.
RSCP	Received Signal Code Power in dBm
MCC	Mobile Country Code (first part of the PLMN code)
MNC	Mobile Network Code (second part of the PLMN code)
LAC	Location Area Code, see note
cell	Cell ID
SQual	Quality value for base station selection in dB (see 3GPP 25.304)
SRxLev	RX level value for base station selection in dB (see 3GPP 25.304)

Columns for GSM (2G) Dedicated Channel parameters:

Column	Description
ARFCN	ARFCN (Absolute Radio Frequency Channel Number) of the BCCH carrier
TS	Timeslot number
timAdv	Timing advance in bits
dBm	Receiving level of the traffic channel carrier in dBm
Q	Receiving quality (0-7)
ChMod	Channel mode (--: Signalling, S_HR: Half rate, S_FR: Full rate, S_EFR: Enhanced Full Rate, A_HR: AMR Half rate, A_FR: AMR Full rate)

Columns for UMTS (3) Dedicated Channel parameters:
Note: Physical channels in downlink are considered.

Column	Description
PhysCh	Physical Channel Type (DPCH, FDPCH)
SF	Spreading Factor (4,8,16,32,64,128,256,512)
Slot	Slot Format for DPCH (0-16) (see 3GPP TS 25.211 V7.10.0 Table 11) Slot Format for FDPCH (0-9) (see 3GPP TS 25.211 V7.10.0 Table 16C)
EC/n0	Carrier to noise ratio in dB
RSCP	Received Signal Code Power in dBm
ComMod	Compressed Mode (0-1) (indicates valid transmission gap pattern)
HSUPA	HSUPA Status (a.k.a. E-DCH Status) indicated by xy: x = Cell Capability Indicator: 0 - HSUPA capability not indicated, 1 - HSUPA Capable Cell. Please consider that some providers/MNOs don't support this flag and that it is provided "for display indication only", see 3GPP TS 25.331 [41] (later than version 6.9.0) section 10.2.48.8.8. y = ME Call Status: 0 - HSUPA inactive, 1 - HSUPA active
HSDPA	HSDPA Status indicated by xy: x = Cell Capability Indicator: 0 - HSDPA capability not indicated, 1 - HSDPA Capable Cell. Please consider that some providers/MNOs don't support this flag and that it is provided "for display indication only", see 3GPP TS 25.331 [41] (later than version 6.8.0), section 10.2.48.8.8. y = ME Call Status: 0 - HSDPA inactive, 1 - HSDPA suspended, 2 - HSDPA active

8.12.3 Service states

Depending on the service state, an additional textual output is generated (refer also to the response examples):

- 'SEARCH' (Searching) - The MS is searching, but could not (yet) find a suitable cell. This output appears after restart of the MS or after loss of coverage.
- 'NOCONN' (No connection) - The MS is camping on a cell and registered to the network. The service state is 'idle', i.e. there is no connection established or a dedicated channel in use.
- 'LIMSRV' (Limited Service) - The MS is camping on a cell but not registered to the network. Only emergency calls are allowed. The MS enters this state, for example, when
  - no SIM card is inserted, or PIN has not been given,
  - neither Home PLMN nor any other allowed PLMN are found,
  - registration request was not answered or denied by the network (use command AT+CREG to query the registration status),
  - authentication failed.

8.13 AT^SMONP Monitoring Neighbour Cells

The AT^SMONP supplies information of active cells and all neighbour cells. The active cell information will be delivered additively because an ME can be situated in Soft Handover or Softer Handover.

Syntax

Test Command

AT^SMONP=?

Response(s)

OK

Exec Command

AT^SMONP

Response(s)

See: Section 8.13.1, AT^SMONP Responses

OK

Write Command

AT^SMONP=255

Response(s)

See: Section 8.13.2, AT^SMONP Enhanced Responses

OK

ERROR

+CME ERROR: <err>

PIN	✈	Last
-	-	-

Notes

- Due to the fact that not all necessary information of the neighbour cells can be decoded during a connection, there are several constraints to be considered:
  - Only neighbour cells that have already been visible in IDLE mode will be further updated, as long as they are still included in the list.
  - Though new neighbour cells can be added to the list (e.g. due to handover), their C1 and C2 parameters cannot be displayed until the connection is released. In this case "-" is presented for C1 and C2.
- The neighbour cells have the same PLMN as the serving cell.
- In case of a GSM (2G) serving cell the ME shows GSM (2G) and UMTS (3G) neighbour cells. If ME is registered to a UMTS (3G) network then no neighboring GSM (2G) cells are shown or neighboring GSM (2G) cells are shown with incomplete parameter values. Parameters for which no values are available are shown as "-".

8.13.1 AT^SMONP Responses

Responses of AT^SMONP execute command:

- In case of a GSM (2G) serving cell:

```
Syntax:
2G:
ARFCN1,rs1,dBm1,MCC1,MNC1,NCC1,BCC1,C11,C21,LAC1,cell1
ARFCN2,rs2,dBm2,MCC2,MNC2,NCC2,BCC2,C12,C22,LAC2,cell2
...
ARFCNn,rsn,dBmn,MCCn,MNCn,NCCn,BCCn,C1n,C2n,LACn,celln
```

```
3G:
UARFCN1,PSC1,EC/n01,RSCP1
UARFCN2,PSC2,EC/n02,RSCP2
...
UARFCNn,PSCn,EC/n0n,RSCPn


Example:
2G:
653,26,-84,262,07,3,0,22,22,0141,3B2F
660,20,-90,262,07,3,3,16,16,0143,83B9
687,19,-91,262,07,3,1,15,15,0141,3B31
678,14,-95,262,07,3,3,10,10,0141,3B2F
671,14,-96,262,07,3,1,10,10,0141,8F67
643,10,-99,262,07,3,7,6,6,0141,83BB
3G:
10564,296,-6.5,-68
10564,96,-10.5,-83
OK
```

- In case of a UMTS (3G) serving cell:

```
Syntax:
3G:
UARFCN1,PSC1,EC/n01,RSCP1,SQual1,SRxLev1
UARFCN2,PSC2,EC/n02,RSCP2,SQual2,SRxLev2
...
UARFCNn,PSCn,EC/n0n,RSCPn,SQualn,SRxLevn

2G:
ARFCN1,RSSI1,NCC1,BCC1,SRxLev1
ARFCN2,RSSI2,NCC2,BCC2,SRxLev2
...
ARFCNn,RSSIn,NCCn,BCCn,SRxLevn


Example:
3G:
10663,212,-8.0,-76,20,39
10663,346,-12.5,-81,11,34
10663,52,-14.0,-83,8,32
10663,208,-19.5,-87,-3,28
10663,214,-22.0,-90,-8,25
10663,263,-24.0,-100,-27,15
2G:
----,----,-,-,----
OK
```

Columns for GSM (2G) parameters:

Column	Description
ARFCN	Absolute Radio Frequency Channel Number of the BCCH carrier
rs	RSSI value 0 - 63 (RSSI = Received signal strength indication)
dBm	Receiving level in dBm
MCC	Mobile Country Code (first part of the PLMN code)

Column	Description
MNC	Mobile Network Code (second part of the PLMN code)
NCC	Network colour Code
BCC	Base Station colour code
C1	cell selection criterion
C2	cell reselection criterion
LAC	Location area code
cell	Cell identifier

Columns for UMTS (3G) parameters:

Column	Description
UARFCN	UTRAN Absolute Radio Frequency Channel Number of the BCCH carrier
PSC	Primary Scrambling Code
EC/n0	Carrier to noise ratio in dB = measured Ec/Io value in dB. Please refer to 3GPP 25.133, section 9.1.2.3, Table 9.9 for details on the mapping from EC/n0 to EC/Io.
RSCP	Received Signal Code Power in dBm
SQual	Quality value for base station selection in dB (see 3GPP 25.304)
SRxLev	RX level value for base station selection in dB (see 3GPP 25.304)

8.13.2 AT^SMONP Enhanced Responses

Responses of write command AT^SMONP=255:

- In case of a GSM (2G) serving cell:

```
Syntax:
2G:
ARFCN1,rs1,dBm1,MCC1,MNC1,NCC1,BCC1,C11,C21,LAC1,cell1,C311,C321
ARFCN2,rs2,dBm2,MCC2,MNC2,NCC2,BCC2,C12,C22,LAC2,cell2,C312,C322
...
ARFCNn,rsn,dBmn,MCCn,MNCn,NCCn,BCCn,C1n,C2n,LACn,celln,C31n,C32n
3G:
UARFCN1,PSC1,EC/n01,RSCP1
UARFCN2,PSC2,EC/n02,RSCP2
...
UARFCNn,PSCn,EC/n0n,RSCPn


Example:
2G:
653,26,-84,262,07,3,0,22,22,0141,3B2F,0,0
660,20,-90,262,07,3,3,16,16,0143,83B9,0,0
687,19,-91,262,07,3,1,15,15,0141,3B31,0,0
678,14,-95,262,07,3,3,10,10,0141,3B2F,0,0
671,14,-96,262,07,3,1,10,10,0141,8F67,0,0
643,10,-99,262,07,3,7,6,6,0141,83BB,0,0
3G:
10564,296,-6.5,-68
```

```
10564,96,-10.5,-83
OK
```

- In case of a 3G serving cell:

```
Syntax:
3G:
UARFCN1,PSC1,EC/n01,RSCP1,SQual1,SRxLev1,set1,rank1
UARFCN2,PSC2,EC/n02,RSCP2,SQual2,SRxLev2,set2,rank2
...
UARFCNn,PSCn,EC/n0n,RSCPn,,SQualn,SRxLevn,setn,rankn

2G:
ARFCN1,RSSI1,NCC1,BCC1,SRxLev1,rank1
ARFCN2,RSSI2,NCC2,BCC2,SRxLev2,rank2
...
ARFCNn,RSSIn,NCCn,BCCn,SRxLevn,rankn


Example:
3G:
10663,212,-8.0,-76,20,39,AS,-12
10663,346,-12.5,-81,11,34,SN,-25
10663,52,-14.0,-83,8,32,SN,-28
10663,208,-19.5,-87,-3,28,SN,-32768
10663,214,-22.0,-90,-8,25,SN,-32768
10663,263,-24.0,-100,-27,15,SN,-32768
2G:
----,----,-,-,----,------
OK
```

Columns for GSM (2G) parameters:

Column	Description
ARFCN	Absolute Radio Frequency Channel Number of the BCCH carrier
rs	RSSI value 0 - 63 (RSSI = Received signal strength indication)
dBm	Receiving level in dBm
MCC	Mobile Country Code (first part of the PLMN code)
MNC	Mobile Network Code (second part of the PLMN code)
NCC	Network colour Code
BCC	Base Station colour code
C1	cell selection criterion
C2	cell reselection criterion
LAC	Location area code
cell	Cell identifier
C31	cell reselection criterion
C32	cell reselection criterion
SRxLev	RX level value for base station selection in dB (see 3GPP 25.304)
rank	Rank of this cell as neighbor for inter-RAT cell reselection

Columns for UMTS (3G) parameters:

Column	Description
UARFCN	UTRAN Absolute Radio Frequency Channel Number of the BCCH carrier
PSC	Primary Scrambling Code
EC/n0	Carrier to noise ratio in dB = measured Ec/Io value in dB. Please refer to 3GPP 25.133, section 9.1.2.3, Table 9.9 for details on the mapping from EC/n0 to EC/Io.
RSCP	Received Signal Code Power in dBm
SQual	Quality value for base station selection in dB (see 3GPP 25.304)
SRxLev	RX level value for base station selection in dB (see 3GPP 25.304)
set	3G neighbour cell set (AS: ASET, SN: Sync Nset, AN: Async Nset)
rank	Rank of this cell as neighbor for inter-RAT cell reselection

8.14 AT^SNMON Network monitoring

The AT^SNMON command can be used to monitor various network information. Please note, that the write command only returns a line with the current parameter values, if <mode> is set to 2 (Query current values).

Syntax

Test Command

AT^SNMON=?

Response(s)

^SNMON: "INS", (list of supported <mode>s)
OK
ERROR
+CME ERROR: <err>

Write Command

Start informal network scan.

AT^SNMON="INS", <mode>

Response(s)

If <mode>= 0 or 1:
OK
ERROR
+CME ERROR: <err>

If <mode>= 2:
In case of <rat>= 0:
^SNMON: "INS", <mode>, <rb>, <rat>, <cid>, <lac>, <plmn>, <arfcn>, <rssi>, <dbm>, <gprs_avail>

In case of <rat>= 2:
^SNMON: "INS", <mode>, <rb>, <rat>, <cid>, <lac>, <plmn>, <uarfcn>, <rscp>, <dbm>, <psc>

In case of no cell found for specific band then all values behind <rb> will be omitted:
^SNMON: "INS", <mode>, <rb>

In case of <mode>= 0 or 1 only result code is presented

OK
ERROR
+CME ERROR: <err>

PIN	Last
-	-

Reference(s)

3GPP TS 45.008 [48]

Parameter Description

<mode>(num)

This parameter determines the action to be taken for the monitoring command.

0(P)	Disable ^SNMON URC
1	Enable ^SNMON URC (currently not supported)
2	Query current values

<rb>(num)

Radio Band

In the response of the read command this parameter determines the radio band of the cell that was scanned.

1	GSM 900
2	GSM 1800
4	GSM 850
8	GSM 1900
16	WCDMA 2100 (BC1)
32	WCDMA 1900 (BC2)
64	WCDMA 850 (BC5)
128	WCDMA 900 (BC8)
256	WCDMA 800 (BC6)

<rat>(num)

Radio Access Technology

Parameter determines the radio access technology of the cell that was scanned.

0	GSM
2	UTRAN

<cid>(str)

Cell ID

Parameter determines the 16 bit (GSM) or 28 bit (UMTS) cell ID in hexadezimal format of the cell that was scanned.

<lac>(str)

Location Area Code

Parameter determines the two byte location area code in hexadecimal format (e.g. "00C1" equals 193 in decimal) of the cell that was scanned.

<plmn>(str)

Parameter determines the PLMN code of the cell that was scanned.

<arfcn>(num)

Parameter determines the ARFCN of the cell that was scanned.

<rssi>(num)

Received signal level of the BCCH carrier. The indicated value is composed of the measured value in dBm plus an offset. This is in accordance with a formula specified in 3GPP TS 45.008 [48]

<dbm>(str)

Signal Strength

Parameter determines the receive signal strength in dBm of the cell that was scanned.

<uarfcn>(num)

Parameter determines the UARFCN of the cell that was scanned.

<rscp>(num)

RSCP.

Parameter determines the received signal code power level of the cell that was scanned.

<psc>(num)

PSC.

Parameter determines the primary scrambling code of the cell that was scanned.

<gprs_avail>(num)

GPRS availibility

0	GPRS not available
1	GPRS available

Notes

- The AT^SNMON="INS" command can be used even if no SIM is present or no SIM-PIN was entered.
- The AT^SNMON="INS" command depends on the registration state. Network scan is only possible if the module is not registered. To perform a scan it is needed to deregister manually from the network.
- The AT^SNMON="INS" command may be aborted internally by any other network related activity that interferes with the network scan.
- The time required for an informal network scan depends not only on the number of radio bands to be scanned, but also on ripple and existing ghost peaks on the scanned radio bands.

9. Supplementary Service Commands

The AT commands described in this chapter are related to Supplementary Services.

9.1 AT+CACM Accumulated call meter (ACM) reset or query

The AT+CACM read command returns the current ACM value.

The AT+CACM write command resets the Advice of Charge related to the accumulated call meter (ACM) value in SIM file EF(ACM). ACM contains the total number of home units for both the current and preceding calls.

Syntax

Test Command

```
AT+CACM=?
```

Response(s)

```
OK
```

Read Command

```
AT+CACM?
```

Response(s)

```
+CACM: <acm>
OK
ERROR
+CME ERROR: <err>
```

Write Command

```
AT+CACM=[<passwd>]
```

Response(s)

```
OK
ERROR
+CME ERROR: <err>
```

PIN	✈	Last
+	+	-

Reference(s)

3GPP TS 27.007 [44]

Parameter Description

<acm>(str)

Three bytes of the current ACM value in hexadecimal format (e.g. "00001E" indicates decimal value 30) 000000 - FFFFFF.

<passwd>(str)

SIM PIN2

9.2 AT+CAMM Accumulated call meter maximum (ACMmax) set or query

The AT+CAMM read command returns the current ACMmax value.

The AT+CAMM write command sets the Advice of Charge related to the accumulated call meter maximum value in SIM file EF (ACMmax). ACMmax contains the maximum number of home units allowed to be consumed by the subscriber.

Syntax

Test Command

```
AT+CAMM=?
```

Response(s)

```
OK
```

Read Command

```
AT+CAMM?
```

Response(s)

```
+CAMM: <acmmax>
OK
ERROR
+CME ERROR: <err>
```

Write Command

```
AT+CAMM=<acmmax>[, <passwd>]
```

Response(s)

```
OK
ERROR
+CME ERROR: <err>
```

PIN	✈	Last
+	+	-

Reference(s)

3GPP TS 27.007 [44]

Parameter Description

<acmmax>(str)

Three bytes of the max. ACM value in hexadecimal format (e.g. "00001E" indicates decimal value 30) 000000 disable ACMmax feature 000001-FFFFFF.

<passwd>(str)

SIM PIN2

9.3 AT+CAOC Advice of Charge Information

AT+CAOC controls the Advice of Charge supplementary service function mode.

Syntax

Test Command

AT+CAOC=?

Response(s)

+CAOC: (list of supported<Mode>s)
OK

Read Command

AT+CAOC?

Response(s)

+CAOC: <Mode>
OK

Exec Command

AT+CAOC

Response(s)

+CAOC: <ccmValue>
OK
ERROR
+CME ERROR: <err>

Write Command

AT+CAOC=[<Mode>]

Response(s)

If <Mode>=0, ME returns the current <ccmValue> value:
+CAOC: <ccmValue>
OK
ERROR
+CME ERROR: <err>

PIN	✈	Last
+	+	-

Reference(s)

3GPP TS 27.007 [44]

Unsolicited Result Code

+CCCM: <ccmValue>

If activated a URC is sent everytime the CCM value changes

Parameter Description

<Mode>(num)(&V)

0	Query current <ccmValue> value.
1(P)	Deactivate URC reporting of <ccmValue> value.
2	Activate URC reporting of <ccmValue> value.

<ccmValue>(str)

Current value in hexadecimal format, e.g. "00001E" indicates decimal value 30). The three bytes are coded as ACM_{max} value on the USIM; for details refer to 3GPP TS 11.11 [16], 3GPP TS 31.101 [17], 3GPP TS 31.102 [18].

9.4 AT+CCUG Closed User Group

The AT+CCUG write command serves to activate or deactivate the explicit CUG invocation, to set the desired index, and to specify if Preferential Group or Outgoing Access shall be suppressed.

The AT+CCUG read command returns if the Explicit CUG invocation is activated (in parameter <n>), which CUG <index> is chosen, and if Preferential Group or Outgoing Access is suppressed (in parameter <info>).

Syntax

Test Command

AT+CCUG=?

Response(s)

list of supported <n>, range of supported <index>, range of supported <info>
OK
ERROR
+CME ERROR: <err>

Read Command

AT+CCUG?

Response(s)

+CCUG:<n>, <index>, <info>
OK
ERROR
+CME ERROR: <err>

Write Command

AT+CCUG=[[<n>][, <index>][, <info>]]

Response(s)

OK
ERROR
+CME ERROR: <err>

PIN	✈	Last
+	+	-

Reference(s)

3GPP TS 27.007 [44],
3GPP TS 22.085 [31],
3GPP TS 24.085

Parameter Description

<n>(num)

Explicit CUG invocation options

0(P)	Deactivate explicit CUG invocation
1	Activate explicit CUG invocation

<index>(num)

0(P)...9	Explicit selection of CUG index
10	No index (preferred CUG taken from subscriber data)

<info>(num)

State of the call

0(P)	No information

1	Suppress outgoing access
2	Suppress preferential CUG
3	Suppress preferential CUG and Outgoing Access.

Notes

- The active settings for omitted parameters are retained without changes.
- Explicit CUG invocation means that at each call setup, CUG information is added to the called number.
- When starting a call with ATD, Parameter 'G' or 'g' of command ATD will have no effect if the option selected for this single call is identical to the option already selected with AT+CCUG.
- Current settings are saved in the ME automatically.
- ATZ or AT&F do not influence the current settings.
- Some combinations of parameters may lead to rejection of CUG calls by the network. For more information, please consult 3GPP TS 24.085.

9.5 AT+CCFC Call forwarding number and conditions control

AT+CCFC controls the call forwarding supplementary service. Registration, erasure, activation, deactivation and status query are supported.

Syntax

Test Command

AT+CCFC=?

Response(s)

+CCFC: (list/range of supported <reason>s)
OK

Write Command

AT+CCFC=<reason>, <mode>[, <number>[, <type>[, <class>[, <time>]]]]

Response(s)

If <mode> is not equal 2 and command successful:
OK
If <mode>= 2, <reason> is not equal 2 and command successful:
+CCFC: <status>, <class>[, <number>, <type>]
OK
If <mode>= 2, <reason>= 2 and command successful:
+CCFC: <status>, <class>[, <number>, <type>[, <subaddress>, <satype>[, <time>]]]
OK
If error is related to ME functionality
ERROR
+CME ERROR: <err>

PIN	✈	Last
+	±	-

Reference(s)

3GPP TS 27.007 [44],
3GPP TS 22.004 [24],
3GPP TS 22.082 [29],
3GPP TS 24.082

Parameter Description

<reason>(num)

Reason for call forwarding

0	Unconditional
1	Mobile busy
2	No reply
3	Not reachable
4	All call forwarding (includes reasons 0, 1, 2 and 3)
5	all conditional call forwarding (includes reasons 1, 2 and 3)

<mode>(num)

Network operation to be performed for Supplementary service "call forwarding"

0	Disable call forwarding (disable service)
1	Enable call forwarding (enable service)
2	Query status of call forwarding (query service status)

3	Register <number> and activate Call forwarding (register service)
4	Erase <number> and deactivate call forwarding (erase service)

<number>(str)

String type phone number of forwarding address in format specified by <type>. If you select <mode>= 3, the phone <number> will be registered in the network. This allows you to disable / enable CF to the same destination without the need to enter the phone number once again. Depending on the services offered by the provider the registration may be mandatory before CF can be used. The number remains registered in the network until you register another number or erase it using <mode> = 4.

<type>(num)

Type of address octet

145	Dialing string <number> includes international access code character '+'
129	Otherwise

<class>(num)

Integer or sum of integers each representing a class of information, i.e. a bearer service, telecommunication service or bearer service group as defined in 3GPP TS 22.004 [24]

1	Voice
2	Data <class> 2 (data) comprises all those <class> values between 16 and 128, that are supported both by the network and the MS. This means, a setting made for <class> 2 applies to all remaining data classes (if supported). In addition, you can assign a different setting to a specific class. For example, you can activate Call Forwarding for all data classes, but deactivate it for a specific data class.
4	Fax (only for compatibility reasons, not supported by EHS6-A)
8	SMS
16	Data circuit sync
32	Data circuit async
64	Dedicated packet access
128	Dedicated PAD access
1...[7]...255	combination of some of the above classes. For example, the default setting 7 represents the sum of the integers 1, 2 and 4 for voice, data and fax (fax only for compatibilty reasons). The value 255 covers all classes. If the <class> parameter is omitted, the default value 7 is used.

<subaddress>(str)

Only for compatibility reasons, not supported by EHS6-A

<satype>(num)

Only for compatibility reasons, not supported by EHS6-A

<time>(num)

5...[20]...30	Time to wait before call is forwarded, rounded to a multiple of 5 sec. (only for <reason>=no reply)

<status>(num)

0	Call Forwarding not active
1	Call Forwarding active

Notes

- You can register, disable, enable and erase <reason> 4 and 5 as described above. However, querying the status of <reason> 4 and 5 with AT+CCFC will result in an error ("+CME ERROR: operation not supported"). As an alternative, you may use the ATD command followed by *'# codes to check the status of these two reasons. See Star-Hash (*#) Network Commands for a complete list of *# GSM codes.
- Most networks will not permit registration of new parameters for conditional call forwarding (reasons 1,2,3,5) while unconditional call forwarding is enabled.
- The AT+CCFC command offers a broad range of call forwarding options according to the GSM specifications. However, when you attempt to set a call forwarding option which is not provisioned or not yet subscribed to, the setting will not take effect regardless of the response returned. The responses in these cases vary with the network (for example "OK", "Operation not allowed", "Operation not supported" etc.). To make sure check the call forwarding status with <mode>=2.
- Some networks may choose to have certain call forwarding condtions permanently enabled (e.g. forwarding to a mailbox if the mobile is not reachable). In this case, erasure or deactivation of call forwarding for these conditions will not be successful, even if the CCFC request is answered with response "OK".
- The command has been implemented with the full set of <class> parameters according to 3GPP TS 27.007 [44]. For actual applicability of SS "call forwarding" to a specific service or service group (a specific <class> value) please consult table A.1 of 3GPP TS 22.004 [24].
- There is currently no release of 3GPP TS 22.004 [24], in which the "Call Forwarding" Supplementary Service is defined as applicable to SMS services.

9.6 AT+CCWA Call Waiting

The AT+CCWA write command controls the "Call Waiting" supplementary service according to 3GPP TS 22.083 [30]. Activation, deactivation and status query are supported. The read command returns the current value of <n>.

Syntax

Test Command

AT+CCWA=?

Response(s)

+CCWA: (list of supported <n>s)
OK

Read Command

AT+CCWA?

Response(s)

+CCWA: <n>
OK

Write Command

AT+CCWA=[[<n>][, <mode>][, <class>]]

Response(s)

If <mode> is not equal 2 and command successful:
OK
If <mode>= 2 and command successful:
+CCWA: <status>, <class>
[+CCWA: <status>, <class>]
[+CCWA: ...]
OK
If error is related to ME functionality
+CME ERROR: <err>

PIN	✈	Last
+	-	-

Reference(s)

3GPP TS 27.007 [44],
3GPP TS 22.004 [24],
3GPP TS 22.083 [30],
3GPP TS 24.083

Unsolicited Result Code

Indication of a call that is currently waiting and can be accepted.

+CCWA: <calling number>, <type of number>, <class>, , <CLI validity>

If <n>=1 and the call waiting supplementary service is enabled in the network, URC "+CCWA" indicates a waiting call to the TE. It appears while the waiting call is still ringing.

Parameter Description

<n>(num)	
0	Disable display of "+CCWA" URC
1	Enable display of "+CCWA" URC

<mode>(num)

Network operation to be performed for Supplementary service call waiting

0	Disable call waiting (disable service)
1	Enable call waiting (enable service)
2	Query status of call waiting (query service status)

<class>(num)

Integer or sum of integers each representing a class of information, i.e. a bearer service, telecommunication service or bearer service group as defined in 3GPP TS 22.004 [24].
In the write command, parameter <class> specifies the class of the active call during which an incoming call of any class is to be regarded as a waiting call.
In URC "+CCWA: <calling number>, <type of number>, <class>, , <CLI validity>", parameter <class> specifies the class of the waiting call.

1	Voice
2	Data <class> 2 (data) comprises all those <class> values between 16 and 128, that are supported both by the network and the MS. This means, a setting made for <class> 2 applies to all remaining data classes (if supported). In addition, you can assign a different setting to a specific class. For example, you can activate call waiting for all data classes, but deactivate it for a specific data class.
4	Fax (only for compatibility reasons, not supported by EHS6-A)
[7]	Voice, data and fax (1+2+4)
8	SMS
16	Data circuit sync
32	Data circuit async
64	Dedicated packet access
128	Dedicated PAD access
1...[7]...255	Combination of some of the above classes. For example, the default setting 7 represents the sum of the integers 1, 2 and 4 for voice, data and fax (fax only for compatibilty reasons). If parameter "class"is omitted, the default value 7 is used.

<status>(num)

0	Call waiting service is not active
1	Call waiting service is active

<calling number>(str)

Phone number of waiting caller in the format specified by parameter <type of number>.

<type of number>(num)

Type of address octet in integer format (refer to 3GPP TS 24.008 [39] subclause 10.5.4.7)

145	<calling number> includes international access code character '+'
128	Number restricted
129	Otherwise

<CLI validity>(num)

0	CLI valid

1	CLI has been withheld
2	CLI is not available

Notes

- With the AT+CHLD command, it is possible to establish a multiparty call or to set the active voice call on hold and then accept a waiting voice call (not possible with fax and data call). See also AT+CHLD.
- Users should be aware that if call waiting is activated (<mode>=1), the presentation of URCs needs to be enabled, too (<n>=1).
  Otherwise, on the one hand, a waiting caller would be kept waiting due to lack of BUSY signals, while, on the other hand, the waiting call would not be indicated to the called party.
- The AT+CCWA command offers a broad range of options according to the GSM specifications. However, when you attempt to enable call waiting for a <class> for which the service is not provisioned or not supported , the setting will not take effect regardless of the response returned. The responses in these cases vary with the network (for example "OK", "Operation not allowed", "Operation not supported" etc.). To make sure check the current call waiting settings with <mode>=2.
- The AT+CCWA command has been implemented with the full set of <class> parameters according to 3GPP TS 27.007 [44]. For actual applicability of SS call waiting to a specific service or service group (a specific <class> value) please consult table A.1 of 3GPP TS 22.004 [24].
- Despite the specifications stated in 3GPP TS 22.004 [24] call waiting is not handled uniformly among all networks:
  3GPP TS 22.004 [24], Annex A, provides the following specification:
  "The applicability of call waiting refers to the telecommunication service of the active call and not of the waiting call. The incoming, waiting, call may be of any kind." Nevertheless, networks do differ on the actual implementation of the service. For example, the activation of call waiting for <class> 4, "fax", causes some networks to send a call waiting indication if a call "of any kind" comes in during an active fax call, but others may (with the same settings active) indicate a waiting fax call during any kind of active call. Thus, the only reliable way to receive or prevent a call waiting indication under any circumstances and in any network, is to activate or deactivate call waiting for all tele- and bearer services (<class> 255).

Examples

EXAMPLE 1

Parameter <n>

```
at+ccwa=1                    To enable the presentation of the URC
OK
```

EXAMPLE 2

Parameter <mode>

```
at+ccwa=,1                   To activate the supplementary service in the network for voice, data,
                             and fax calls (default classes).
                             Note that parameter <n> is left out. In this case, the current value of <n>
                             will be retained.
OK
at+ccwa=,2                   To query the network status of call waiting for default classes
at+ccwa=1,1                  Call Waiting is activated during voice calls.
at+ccwa=1,2                  Call Waiting is activated during data calls.
at+ccwa=1,4                  Call Waiting is activated during fax calls.
OK
```

EXAMPLE 3

Parameter <class>

```
AT+CCWA=,0,1                 To deactivate call waiting for voice calls.
OK
```

9.7 AT+CHLD Call Hold and Multiparty

The AT+CHLD command controls the Supplementary Services Call Hold and Multiparty. Calls can be put on hold, recovered, released and added to a conversation.
Like for all Supplementary Services, the availability and detailed functionality of Call Hold and Multiparty services depends on the configuration of the network. The EHS6-A can only request the service, but the network decides whether and how the request will be answered.

Syntax

Test Command	
AT+CHLD=?	
Response(s)	
+CHLD: (list of supported <n>s) OK	

Write Command	
AT+CHLD=[<n>]	
Response(s)	
OK ERROR +CME ERROR: <err>	

PIN	✈	Last
+	-	-

Reference(s)
3GPP TS 27.007 [44]

Parameter Description

<n>(num)	
0	Release all held calls or set User Determined User Busy (UDUB) for a waiting call: • If a call is waiting, release the waiting call. The calling party will receive a "BUSY" indication (Supplementary Service User Determined User Busy "UDUB") • Otherwise, terminate all held calls (if any).
1	Terminate all active calls (if any) and accept "the other call" as the active call: • If a call is waiting, the waiting call will be accepted. • Otherwise, if a held call is present, the held call becomes active.
1X	Terminate a specific call X. The call may be active, held or waiting. The remote party of the terminated call will receive a "NO CARRIER" indication. Parameter X is the call number <idx> in the list of current calls indicated by AT+CLCC.
2	Place all active calls on hold (if any) and accept "the other call" as the active call: • If a call is waiting, the waiting call will be accepted. • Otherwise, if a held call is present, the held call becomes active.
2X	Place all active calls on hold except call X. Parameter X is the call number <idx> in the list of current calls indicated by AT+CLCC.
3	Add a held call to the active calls in order to set up a conference (multiparty) call.

4	Connect the two calls of a multiparty call and disconnects the subscriber from both calls (ECT).
6	Put an active call on hold or a held call to active, while another call is waiting.
7	Disconnect users in multiparty without accepting incoming call.
8	Release all calls.

Notes

- The AT+CHLD command offers a broad range of options according to 3GPP Technical Specifications. However, if you attempt to invoke an option which is not provisioned by the network, or not subscribed to, invocation of this option will fail. The responses in these cases may vary with the network (for example "Operation not allowed", "Operation not supported" etc.).
- The handling of the supplementary service Call hold and Multiparty varies with the types of calls. This is because only voice calls can be put on hold, while data calls cannot. The following procedures apply: With AT+CHLD=2 the user can simultaneously place a voice call on hold and accept another waiting voice or data call. If the waiting call is a data call, it is also possible to put the voice call on hold. The user needs to wait for the RING signal and manually answer the data call with ATA. To switch back from the active data call to the held voice call the active call must be terminated with AT+CHLD=1. If all active and held calls are voice calls it is possible to switch back and forth with AT+CHLD=2.
- In conflict situations, e.g. when a waiting call comes while there are already held calls, the above procedures apply to the waiting call only. For example, <n>=0 rejects the waiting call, but does not affect the held calls.
- See also the AT+CCWA command for details on how to display waiting calls.

Example

```
^SYSSTART
at+cpin="9999"
OK
+CREG: 2
+CREG: 1,"0145","0016"                  The mobile is now registered.
at+ccwa=1,1,1                           You activate the indication of waiting calls during
                                        voice calls.
OK
atd"03038639268";                       You make a voice call.
OK
+CCWA: "+491791292364",145,32,,0        You receive a URC indicating a waiting data call.
at+chld=2                               You put the voice call on hold.
OK
RING                                    You now receive the RING of the data call.
RING
RING
ATA                                     You accept the data call.
OK
CONNECT 9600/RLP                        The data connection is set up.
hello
+++                                     With "+++" you go in command mode.
OK
at+clcc                                 You interrogate the status of all established calls.
+CLCC: 1,0,1,0,0,"03038639268",129
+CLCC: 2,1,0,1,0,"+491791292364",145
OK
at+chld=1                               The active data call is terminated and the held voice
                                        call becomes active.
OK
at+clcc
+CLCC: 1,0,0,0,0,"03038639268",129
OK
```

9.8 AT+CLIP Calling Line Identification Presentation

AT+CLIP refers to the supplementary service CLIP (Calling Line Identification Presentation) that enables a called subscriber to get the calling line identity (CLI) of the calling party when receiving a mobile terminated call. The AT+CLIP write command enables or disables the presentation of the CLI at the TE. It has no effect on the execution of the supplementary service CLIP in the network.
The AT+CLIP read command gives the status of <n>, and also triggers an interrogation of the provision status of the CLIP service according to 3GPP TS 22.081 [28] (given in <m>). If no SIM card is available or the SIM-PIN is not entered, the command response is "ERROR".

Syntax

Test Command

```
AT+CLIP=?
```

Response(s)

```
+CLIP: (list of supported<n>s)
OK
```

Read Command

```
AT+CLIP?
```

Response(s)

```
+CLIP: <n>,<m>
OK
ERROR
+CME ERROR: <err>
```

Write Command

```
AT+CLIP=<n>
```

Response(s)

```
OK
ERROR
+CME ERROR: <err>
```

PIN	✈	Last
±	-	-

Reference(s)

3GPP TS 27.007 [44],
3GPP TS 22.081 [28]

Unsolicited Result Code

```
+CLIP: <number>, <type>[, , [, [<alpha>][, <CLI validity>]]]
```

Parameter Description

<n>(num)(&V)(&W)	
[0](&F)	Suppress unsolicited result codes
1	Display unsolicited result codes

<m>(num)(&V)	
0	CLIP not provisioned
1	CLIP provisioned
2	Unknown

<number>(str)

String type phone number of calling address in format specified by <type>.

<type>(num)

Type of address octet as defined by 3GPP TS 24.008 [39], subclause 10.5.4.7. For possible values see the <type> parameters specified for phonebook related AT commands, for example AT+CPBR and AT+CPBW.

145	International access code
161	National number
128	Number is restricted
129	Otherwise

<alpha>(str)

String type alphanumeric representation of <number> corresponding to the entry found in phonebook; used character set is the one selected with AT+CSCS.

<CLI validity>(num)

0	CLI valid
1	CLI has been withheld by the originator.
2	CLI is not available due to interworking problems or limitations of originating network. <number> shall be an empty string ("") and <type> value will not be significant.

When CLI is not available (<CLI validity>=2), <number> shall be an empty string ("") and <type> value will not be significant. Nevertheless, ME shall return the recommended value 128 for <type> (TON/NPI unknown in accordance with 3GPP TS 24.008 [39], subclause 10.5.4.7).

When CLI has been withheld by the originator, (<CLI validity>=1) and the CLIP is provisioned with the "override category" option (refer 3GPP TS 22.081 [28] and 3GPP TS 23.081), <number> and <type> is provided. Otherwise, ME shall return the same setting for <number> and <type> as if the CLI was not available.

9.9 AT+CLIR Calling Line Identification Restriction

The AT+CLIR command refers to the supplementary service CLIR (Calling Line Identification Restriction).

Syntax

Test Command
AT+CLIR=?
Response(s)
+CLIR: (list of supported <n>s) OK
Read Command
AT+CLIR?
Response(s)
+CLIR<n>, <m> OK ERROR +CME ERROR: <err>
Write Command
AT+CLIR=<n>
Response(s)
OK ERROR +CME ERROR: <err>

PIN	✈	Last
+	-	-

Reference(s)

3GPP TS 27.007 [44]

Parameter Description

<n>(num)

Parameter shows the settings for outgoing calls:

[0](P)	Presentation indicator is used according to the subscription of the CLIR service
1	CLIR invocation
2	CLIR suppression

<m>(num)

Parameter shows the subscriber CLIR service status in the network:

0	CLIR not provisioned
1	CLIR provisioned in permanent mode
2	Unknown (e.g. no network, etc.)
3	CLIR temporary mode presentation restricted
4	CLIR temporary mode presentation allowed

Note

- The settings made with AT+CLIR=1 or AT+CLIR=2 are used for all outgoing calls until the ME is switched off or AT+CLIR=0 is used.

9.10 AT+COLP Connected Line Identification Presentation

AT+COLP refers to the supplementary service COLP (Connected Line Identification Presentation) that enables a calling subscriber to get the connected line identity (COL) of the called party after setting up a mobile originated call. The command enables or disables the presentation of the COL at the TE. It has no effect on the execution of the supplementary service COLR in the network.

Syntax

Test Command

AT+COLP=?

Response(s)

+COLP: (list of supported <n>s)
OK

Read Command

AT+COLP?

Response(s)

+COLP: <n>,<m>
OK
ERROR
+CME ERROR: <err>

Write Command

AT+COLP=[<n>]

Response(s)

OK
ERROR
+CME ERROR: <err>

PIN	Last
+	- -

Reference(s)

3GPP TS 27.007 [44]

Unsolicited Result Code

Call response format:

+COLP: <number>, <type>

Parameter Description

<n>(num)	
0	Disable - suppress unsolicited result codes
1	Enable - display unsolicited result codes

<m>(num)	
0	COLP not provisioned (no presentation)
1	COLP provisioned
2	Unknown

<number>(str)

String type phone number of connected address in format specified by <type>

<type>(num)

Type of address octet in integer format; 145 when dialling string includes international access code character "+", otherwise 129.

9.11 AT+CNAP Calling Name Presentation

AT+CNAP refers to the supplementary service CNAP (Calling Name Presentation) that enables a called subscriber to get a calling name indication (CNI) of the calling party when receiving a mobile terminated call.
The AT+CNAP write command enables or disables the presentation of CNI at the TE. It has no effect on the execution of the supplementary service CNAP in the network.
The AT+CNAP read command gives the status of <n>, and also triggers an interrogation of the provision status of the CNAP service according to 3GPP TS 22.096 (given in <m>). If no SIM card is available or the SIM-PIN is not entered, the command response is "ERROR".

Syntax

Test Command

```
AT+CNAP=?
```

Response(s)

```
+CNAP: (list of supported<n>s)
OK
```

Read Command

```
AT+CNAP?
```

Response(s)

```
+CNAP: <n>,<m>
OK
ERROR
+CME ERROR: <err>
```

Write Command

```
AT+CNAP=<n>
```

Response(s)

```
OK
ERROR
+CME ERROR: <err>
```

PIN	✈	Last
±	-	-

Reference(s)

3GPP TS 27.007 [44]

Unsolicited Result Code

```
+CNAP: <name>[, <CNI validity>]
```

When CNAP is enabled at the TE (and is permitted by the calling subscriber), this URC is delivered after every "RING" or "+CRING" URC when a mobile terminated call occurs.

Parameter Description

<n>(num)(&V)(&W)

[0](&F)	Suppress unsolicited result codes
1	Display unsolicited result codes

<m>(num)(&V)

Parameter shows the subscriber CNAP service status in the network and may be:

0	CNAP not provisioned
1	CNAP provisioned

2	Unknown
3	Name presentation restricted

`<name>`(str)

Up to 80 characters long string containing the calling party name corresponding to the entry found in phonebook; used character set is the one selected with `AT+CSCS`.

`<CNI validity>`(num)

0	CNI valid
1	CNI has been withheld by the originator.
2	CNI is not available due to interworking problems or limitations of originating network.

When CNI is not available (`<CNI validity>`=2), `<name>` shall be an empty string ("").

9.12 AT+CPUC Price per unit and currency table

The AT+CPUC read command returns the current parameters of PUC.

The AT+CPUC write command sets the parameters of Advice of Charge related price per unit and currency table. SIM PIN2 is usually required to set the parameters.

Syntax

Test Command

```
AT+CPUC=?
```

Response(s)

```
OK
```

Read Command

```
AT+CPUC?
```

Response(s)

```
+CPUC: <currency>,<ppu>
OK
ERROR
+CME ERROR: <err>
```

Write Command

```
AT+CPUC=<currency>,<ppu>[,<passwd>]
```

Response(s)

```
OK
ERROR
+CME ERROR: <err>
```

PIN	✈	Last
+	+	-

Reference(s)

3GPP TS 27.007 [44]

Parameter Description

<currency>(str)(+CSCS)

Three-character currency code (e.g. "GBP", "EUR"). If the currency name is longer than three characters, all characters will be cut off after the third position. Before they are written to the SIM Card, these characters are converted to the standard GSM alphabet.

<ppu>(str)

Price per unit; dot is used as a decimal separator (e.g. "2.66"). The length is limited to 20 characters. If the string length is exceeded, the command is terminated with an error. This string may only contain digits and a dot. Leading zeros are removed from the string. The minimum and maximum value are determined by the structure of the SIM-PUCT file. The maximum price per unit value is 999 999 999.00. When successfully entered, this value is rounded to maximum accuracy.
Note: Due to storage in mantisse (range 0-4095) and exponent (-7 to 7) it is possible that rounding errors occur.

<passwd>(str)

SIM PIN2. String parameter which can contain any combination of digits. The maximum string length is limited to 8 digits. If this value is exceeded, the command terminates with an error message. If the PIN2 is incorrect, a CME error (+CME ERROR: incorrect password) is output. Parameter may be ommitted only if SIM PIN2 was correctly entered before.

Example

To change currency and/or price per unit you have two ways:

You can enter PIN2 along with the AT+CPUC command:

AT+CPUC="EUR","0.10","8888"	(where "8888" = PIN2)
OK	

Alternatively, you can first use the AT+CPIN2 command to enter PIN2.

AT+CPUC="EUR","0.10"	
OK	Successful
AT+CPUC="EUR","0.10"	
+CME ERROR: SIM PIN2 required	Attempt not successful. PIN2 authentication has expired.

9.13 AT+CSSN Supplementary service notifications

AT+CSSN enables or disables the presentation of URCs for supplementary services.

Syntax

Test Command

AT+CSSN=?

Response(s)

+CSSN: (list of supported<n>s), (list of supported<m>s)
OK

Read Command

AT+CSSN?

Response(s)

+CSSN: <n>, <m>
OK

Write Command

AT+CSSN=<n>[, <m>]

Response(s)

OK
ERROR
+CME ERROR: <err>

PIN	✈	Last
-	-	-

Reference(s)

3GPP TS 27.007 [44]

Unsolicited Result Codes

URC 1

+CSSI: <code 1>

When <n>=1 and a supplementary service notification is received after a mobile originated call setup, intermediate result code "+CSSI: <code 1>" is sent to TE before any other MO call setup result codes

URC 2

+CSSU: <code 2>

When <m>=1 and a supplementary service notification is received during a mobile terminated call setup or during a call, unsolicited result code "+CSSU: <code 2>" is sent to TE.

Parameter Description

<n>(num)	
0(P)	Suppress "+CSSI" URCs
1	Activate "+CSSI" URCs

<m>(num)	
0(P)	Suppress "+CSSU" URCs
1	Activate "+CSSU" URCs

<code 1>(num)	
0	Unconditional call forwarding is active

1	Some of the conditional call forwardings are active
2	Call has been forwarded
3	Waiting call is pending

<code 2>(num)	
0	The incoming call is a forwarded call.
5	Held call was terminated by other party
10	Additional incoming call forwarded

Note

- URCs will be displayed only if the call concerned is a voice call, but some URCs will be displayed as well as for data calls (like "+CSSI"=0).

9.14 AT+CUSD Unstructured Supplementary Service Data

AT+CUSD allows to control the handling of Unstructured Supplementary Service Data (USSD) according to 3GPP TS 22.090 [33]. Both network and mobile initiated operations are supported. The interaction of this command with other AT commands based on other supplementary services is described in the related technical specifications.

Parameter <ussdMode> is used to control the presentation of "+CUSD" URCs to the TE, which will be caused by a USSD response from the network or by different network or USAT initiated operations. Therefore, it is recommended to always have "+CUSD" URCs enabled.

If parameter <ussdReq> is given, a mobile initiated USSD send request or a USSD response to a network or USAT initiated operation is sent to the network. A possible response USSD of the network is again presented by a subsequent "+CUSD" URC.

Syntax

Test Command

AT+CUSD=?

Response(s)

+CUSD: (list of supported<ussdMode>s)
OK

Read Command

AT+CUSD?

Response(s)

+CUSD: <ussdMode>
OK

Write Command

AT+CUSD=<ussdMode>[, <ussdReq>[, <ussdDCS>]]

Response(s)

OK
ERROR
+CME ERROR: <err>

PIN	✈	Last
+	-	-

Reference(s)

3GPP TS 27.007 [44],
3GPP TS 22.090 [33],
3GPP TS 24.090

Unsolicited Result Code

+CUSD: <ussdStatus>[, <ussdRsp>[, <ussdDCS>]]

"+CUSD" URC indicates a USSD response from the network, respectively caused by a network or USAT initiated operation.

Parameter Description

<ussdMode>(num)	
0	Disable "+CUSD" URC presentation.
1	Enable "+CUSD" URC presentation. If a USSD send request is sent via ATD this setting is activated implicitly.
2	Cancel session (not applicable to read command response).

<ussdReq>(str)(+CSCS)

Unstructured Supplementary Service Data (USSD) to be sent to the network.
If <ussdReq> parameter is not given, network is not interrogated. AT+CUSD write command only supports setting <ussdDCS>=15.

<ussdRsp>(str)(+CSCS)

Unstructured Supplementary Service Data (USSD) received from the network.
If <ussdDCS> indicates that 3GPP TS 23.038 [34] GSM 7 bit default alphabet is used, the ME converts GSM alphabet into current TE character set according to rules of 3GPP TS 27.005 [43], Annex A. See also Section 1.8, Supported character sets. However, in case of invalid or omitted <ussdDCS>, conversion of <ussdRsp> is not possible.

<ussdDCS>(num)

3GPP TS 23.038 [34] Cell Broadcast Data Coding Scheme (default 0).
In case of an incoming USSD with invalid or omitted data coding scheme information <ussdDCS> will not be presented.

<ussdStatus>(num)

0	No further user action required (network initiated USSD notification, or no further information needed after mobile initiated operation).
1	Further user action is required (network initiated USSD request, or further information is needed after mobile initiated operation). If <ussdStatus>=1 the URC ends with ">" to prompt the TE for the response data. The input action is terminated with <CTRL-Z> or aborted with <ESC>.
2	USSD exchange is terminated by network.
3	A (ME local) client has responded, i.e. the interface was not idle and a busy indication was sent to the network.
4	Operation not supported (e.g. wrong input value given).
5	Network timeout.

Note

- It is recommended to finalize or escape a pending USSD user interaction before further actions are done to prevent blocking situations.

10. Internet Service Commands

EHS6-A has an embedded TCP/IP stack that is driven by AT commands and enables the host application to easily access the Internet. The advantage of this solution is that it eliminates the need for the application manufacturer to implement own TCP/IP and PPP stacks, thus minimizing cost and time to integrate Internet connectivity into a new or existing host application. This chapter is a reference guide to all the AT commands and responses defined for use with the TCP/IP stack.

Access is provided to the following Internet Services:

1. Socket Services:
   - Non-Transparent or Transparent TCP Client
   - Non-Transparent or Transparent TCP Listener
   - Non-Transparent or Transparent UDP Client
   - Non-Transparent UDP Endpoint
2. FTP Client
3. HTTP Client
4. SMTP Client

Two design strategies for using Internet Service AT commands - URC mode or polling mode:
The EHS6-A offers two modes of controlling an Internet session opened with AT^SISO. To select the mode that best suits the preferences of your application design use the AT^SCFG command, parameter "Tcp/WithURCs" (refer to <tcpWithUrc>).

- URC mode (delivery default):
  The progress of an Internet session is URC driven. The URCs notify the host whether data can be sent or received, whether data transfer has completed, whether the service can be closed or whether an error has occurred. This mechanism eliminates the need to poll the service until the necessary progress information is received.
  To enable the URC mode select: AT^SCFG="Tcp/WithURCs",on.
- Polling mode:
  In polling mode, the presentation of URCs related to the Internet Services is disabled. The host is responsible to retrieve all the status information needed for controlling the Internet session. This is done by polling, where the host application keeps sending the commands AT^SISR, AT^SISW, AT^SISI.
  To enable the polling mode select: AT^SCFG="Tcp/WithURCs",off.
  The disabled URCs are the following: "^SISR" URC, "^SISW" URC and "^SIS" URC for parameter <urcCause>=0 (Internet service events), but not for <urcCause>=1 or 2 (needed for Socket listener and always enabled).

Step-by-step overview of how to configure and use TCP/IP communications with EHS6-A:

- Select URC mode or polling mode as described above.
- First of all, create a GPRS connection profile with AT^SICS. The connection profile is a set of basic parameters which determines the type of connection to use for an Internet service. The connection type is also referred to as bearer. Up to 6 connection profiles can be defined, each identified by the <conProfileId>. For each configured connection profile there must be a free PDP context in AT+CGDCONT.
- Secondly, use AT^SISS to create a service profile based on one of the connection profiles. Up to 10 service profiles can be defined, each identified by the <srvProfileId>. The service profile specifies the type of Internet service to use, e.g., Socket, FTP, HTTP, SMTP. To assign a connection profile to a service profile, the <conProfileId> of AT^SICS must be entered as "conId" value of the AT^SISS parameter <srvParmTag>.
  This offers great flexibility to combine connection profiles and service profiles.
- Once the connection profile and the service profile are created, an Internet session can be opened by entering the AT^SISO write command and the desired <srvProfileId>.
  In URC mode, the "^SISR" or "^SISW" URC indicates whether the service is ready to receive or send data. This means, that the AT^SISR or AT^SISW command shall be entered after the URC was received. If an error

occurs the "^SIS" URC is delivered instead.
In polling mode, you can enter the AT^SISR or AT^SISW command straight after AT^SISO though you may need to do so several times until the service confirms that data can be sent or received.

- The first parameter of the AT^SISR or AT^SISW commands is always the <srvProfileId>, the second parameter is the number of bytes which the host either wants to send to or is able to receive from the module. The way the module handles the data transfer follows the rules of the ordinary socket interface and is aware that a host may be limited by its input buffer size. The maximum data size supported by EHS6-A is 1500 bytes in both directions (read or write). To send or receive more than 1500 bytes, the read or write action shall be repeated until the data transfer has completed. Each read or write action requires that the command response (of AT^SISR or AT^SISW) confirms that the service is ready to send or receive data.
  To end an upload data stream set the <eodFlag> in the last AT^SISW command.
- For the Socket service in Transparent Mode, the AT command AT^SIST provides a specific mode of data exchange and accepts <srvProfileId> only. In that mode the service is connected to the interface in a transparent manner and exchanging data is not related to the AT^SISW and AT^SISR cycles. To resume AT command mode enter the +++ escape sequence or, if enabled by AT&D, toggle the DTR line.
- The AT^SISI command shall be used to monitor the progress of the session. The command reports the service state of the used service profile and indicates the number of bytes received, the number of bytes sent and, in the case of sending, the number of bytes acknowledged or unacknowledged at TCP layer.
- If an error occurs during a session you can enter the AT^SISE command and the <srvProfileId> to identify the reason. This is especially important in polling mode.
- The AT^SICI command can be used any time to query the current status of one or all connection profile(s).
- Finally, to end a session, enter the AT^SISC write command and the <srvProfileId>.

Overview of the Transparent TCP Listener service:

- AT^SISW and AT^SISR are not supported for the Transparent TCP Listener service.
- The handling of connected clients is similiar to the Transparent TCP or UDP client (the specific transparent access mode, the handling of DCD and DTR line and the +++ handling.
- AT^SISS allows some specific options for the Transparent TCP Listener service to configure auto answering ("autoconnect"), connect timeout ("connecttimeout"), address filtering ("addrfilter").
- The Transparent TCP Listener service supports the service states <srvState> 2 (ALLOCATED - service is defined), 4 (Up - Listening for client connects), 7 (Alerting - a client tries to connect), 8 (Connected) and 9 (Released - client disconnected and unread data available). If the client connection is released locally (by AT^SISH), then the service directly switches from state Connected back to Listening (throwing away potentially unread received data).
- The Transparent TCP Listener service uses the socket states <socketState> 1 (Not Assigned - in service state 2), 3 (Listener - in service states 4 and 7) and 4 (Server - in service states 8 and 9).
- After opening the Transparent TCP Listener service with AT^SISO no "^SISW" URC appears. The Transparent TCP Listener service is immediately after the "OK" response for the AT^SISO command waiting for incoming client connects (can be verified with AT^SISI which shows state '4').
- An incoming client connect request is indicated by the URC "^SIS". This URC will show <urcCause> "3" if autoconnect is enabled and <urcCause> "1" if autoconnect is disabled.
  If autoconnect is enabled the client connect request will be accepted automatically and the transparent data mode is entered (indicated by an immediately following "CONNECT" URC).
  If autoconnect is disabled, then the client connect request can be rejected by using AT^SISC=<srvProfileId> or accepted by using AT^SISO=<srvProfileId> (wherw <srvProfileId>= <urcInfoId> given in "^SIS" URC). Accepting with AT^SISO opens a new Transparent TCP Listener service instance with a new dynamically assigned <srvProfileId>. For details see sections Section 10.14, Internet Service URC "^SIS" and Section 10.15.4, Accepting / Rejecting Socket Connect Request from Remote Client
  If the client connect request is not accepted within the configured 'connecttimeout', then the client connect request is rejected automatically and the URC "^SIS" is sent with <urcCause> set to '4'.
- After a client connection was accepted any following client connect is rejected automatically without displaying the "^SIS" URC until the client connection is closed. There is a counter <rejCounter> in the response of the AT^SISO read command to indicate such hidden rejects.
- If the client closes the connection while transparent access mode is active, then the transparent mode will be left with the "NO CARRIER" result code. If the client closes the connection while transparent mode is suspended and command mode is active, then the URC "^SIS" is displayed with <urcCause> set to '0'. So handling is the same as for Transparent TCP or UDP client service.

If the client connection was closed but there are still received data which were not yet read via the transparent access mode, then service is in state RELEASED and those data can be read by AT^SIST or thrown away by using AT^SISH.

- To close a client connection use AT^SISH, toggle DTR line. Afterwards the service is listening again.
- Only 1 connected client is supported per interface even if 2 Transparent TCP Listener services are configured and running. If 2 Transparent TCP Listener services are open on the same interface and one is already connected with a client then it is not possible to connect a 2nd client to the other Transparent TCP Listener service. The client connect to the 2nd Transparent TCP Listener service is indicated by the "^SIS" URC but even if auto answering is configured it is not executed. Accepting the 2nd client connect using AT^SIST is also not possible. To accept the 2nd connect, the active connection to the 1st client needs to be terminated before. Afterwards accept the 2nd client connect using AT^SIST (auto answering for the 2nd alerting client remains disabled). Please note, that the 'connecttimeout' handling is still active for the 2nd client connect).
  To have 2 connected clients to Transparent TCP Listener services you need to execute the 2 Transparent TCP Listener services on different interfaces.

Maximum number of profiles defined / used:

- Up to 6 connection profiles can be created (with AT^SICS).
- Up to 10 service profiles can be created (with AT^SISS).
- A connection profile can be created on one interface and then viewed or changed on all other interfaces.
- A service profile can be used only on one interface at a time:
  - Service profiles can only be opened on the interface where they have been defined with AT^SISS.
  - Accordingly, on each interface the read commands AT^SISO? and AT^SISI? deliver full status information for the service profiles configured / opened on this interface, while service profiles related to other interfaces are only listed by <srvProfileId> and service type name (= <srvParmTag> value "srvType") without any status parameters.
  - Changes to a service profile are allowed only on the same interface where it was created, trying to change it on another interface is denied with "+CME ERROR: invalid index". If queried with the read command AT^SISS? the entire profile is returned on the interface where the service profile was created, while on all other interfaces only the service type of the profile is stated.
  - To free a service profile for use on another interface, use the AT^SISS command and select service type = "none". This action deletes the entire profile and restores all parameters of the profile to their initial power-up state (all values are empty). For example, to remove the service profile 3, set AT^SISS=3,srvType,none. After this, a new profile 3 can be created on any other interface.

Address notation

Server addresses must be provided as IPv4 addresses in standard dot format, e.g. "192.168.1.2", or as server address names resolvable by a DNS server.

Timeouts

Timeouts are not part of the Internet AT command functionality implemented in EHS6-A and, if desired, are the responsibility of the host application. It is recommended that the host application validates URCs and AT command responses and reacts adequately, for example by sending a close message or starting a timer.

Socket service used with UDP protocol

The significant differences between the TCP and UDP protocols imply that UDP sometimes requires particular procedures or even specific parameters. Details on how to handle UDP services can be found in extra notes or are included in the general parameter descriptions.
The EHS6-A offers two kinds of Socket service with UDP protocol. One is referred to as UDP client intended for connections to a given remote host. In this case the IP address and the UDP port of the remote host are set as a fixed parameter in the service profile. The other type is referred to as UDP endpoint where IP address and UDP port of the remote hosts are handled in each read (AT^SISR) and write (AT^SISW) request. This enables the host application to communicate with different remote hosts.

Using the DCD line to detect the connection status of Internet services

With AT&C you can configure the DCD line of the used serial interface to indicate whether an Internet service is active. For Socket, HTTP the states "Up" or "Connecting" are indicated, for FTP and transparent TCP only the state "Up", for the Transparent TCP Listener service the states "Up", "Alerting", "Connected" and "Released".

Secure connection (TLS)
All services support Transport Layer Security (TLS), except UDP client and Socket Listener. To set TLS simply add "s" to the address type, such as socktcps, ftps, https, smtps. For details see AT^SISS <srvParmTag> parameter "address". To create customized TLS certificates please refer to AT^SJMSEC and [3]. The processes of switching on/off certificate verification and adding/removing certificates for socktcps, ftps and smtps are same as those of https. Please refer to the description for https in AT^SJMSEC and [3]. The certificates should be installed on the FFS, and the boundary is determined by the size of FFS.

10.1 AT^SICS Internet Connection Setup Profile

AT^SICS serves to create and edit Internet connection profiles. A connection profile can be assigned to one or more service profiles defined with AT^SISS, and thus, determines which type of connection is to be established when opening a service profile with AT^SISO.

The AT^SICS read command requests the current settings of all Internet connection profiles.

The AT^SICS write command specifies all parameters of a connection profile identified by <conProfileId>. To add or change the settings the write command needs to be executed for each single <conParmTag>. All profile parameters set with AT^SICS are volatile. To save profile settings in non-volatile memory please refer to AT^SIPS.

EHS6-A is designed to use PAP authentication (Password Authentication Protocol) when parameters "user" and "passwd" are given within the connection profile. If credentials are omitted, no authentication is performed. The list below shows which <conParmTag> parameters are mandatory (= m) or optional (= o).

Table 10.1: Applicability of AT^SICS <conParmTag> values

<conParmTag>	<conParmValue-conType> GPRS0
"conType"	m
"user"	o
"passwd"	o
"apn"	m
"inactTO"	o
"dns1"	o

Syntax

Test Command

```
AT^SICS=?
```

Response(s)

```
OK
```

Read Command

```
AT^SICS?
```

Response(s)

```
^SICS: <conProfileId>, <conParmTag>, <conParmValue>
[^SICS: ...]
OK
```

Write Command

```
AT^SICS=<conProfileId>, <conParmTag>, <conParmValue>
```

Response(s)

```
OK
ERROR
+CME ERROR: <err>
```

PIN ✈ Last

\- + -

Parameter Description

<conProfileId>(num)

0...5	Internet connection profile identifier. The <conProfileId> identifies all parameters of a connection profile, and, when a service profile is created with AT^SISS the <conProfileId> needs to be set as "conId" value of the AT^SISS parameter <srvParmTag>.

<conParmTag>(str)

Internet connection parameter.

“conType“	Type of Internet connection. For supported values of <conParmValue> refer to <conParmValue-conType>.
“user“	User name string: maximum 31 characters (where "" is default).
“passwd“	Password string: maximum 31 characters (where ***** is default).
“apn“	Access point name string value: maximum 99 characters (where "" is default).
“inactTO“	Inactivity timeout value in seconds: 0 ... 2^{16}-1, default = 20 Number of seconds the bearer remains open although the service no longer needs the bearer connection. Setting the value to 0 does not deactivate the timer. If the value is set to 0, the bearer is closed immediately after the service no longer needs the connection. Short timeout may result in problems when using the <eodFlag> (set in the last AT^SISW command to terminate an upload data stream). It is possible that the bearer will get closed before the flag will be transmitted. As result the server will not receive the flag. Considering this avoid setting the timeout value below 3 seconds when using the <eodFlag>.
“dns1“	Primary DNS server address (IPv4 address in dotted-four-byte format). This value determines whether to use the DNS server addresses dynamically assigned by the network or a specific DNS server address given by the user. "dns1" = "0.0.0.0" (default) means that the CSD or GPRS connection profile uses dynamic DNS assignment. Any other address means that the Primary DNS is manually set. The default value applies automatically if no other address is set. Note that the AT^SICS read command only returns a manually configured IP address, while the value "0.0.0.0" is not indicated at all, no matter whether assumed by default or explicitly specified. See also note below.

<conParmValue>(str)(+CSCS)

Parameter value; type and supported content depend on related <conParmTag>.

<conParmValue-conType>(str)

Supported connection type values in <conParmValue> for <conParmTag> value "conType".

“GPRS0“	Packet switched connection type IPv4. Settings of Packet Domain related commands are not used, e.g. AT+CGDCONT. However, for each configured connection profile there must be a free PDP context in AT+CGDCONT. After entering AT^SISO EHS6-A automatically tries to attach to a Packet Domain. Yet, the only exception is AT+CGATT which can be used any time to detach from the Packet Domain and thus disconnect the bearer opened with AT^SISO.
“none“	Clears the connection profile.

Notes

- Before opening a service profile based on a connection profile recently used, check with AT^SICI that the previous connection was properly closed. If AT^SICI confirms that the connection profile is in <conState> 0 (Down) the connection profile may be used again.
- If a GPRS network does not support or is not correctly configured for automatic DNS address assignment the TCP/IP stack cannot resolve fully qualified domain names. In this case, a warning message will be returned when trying to open an Internet service configured for automatic DNS address assignment.

10.1.1 Example: GPRS connection profile

`at^sics=0,conType,GPRS0` `OK`	Select connection type GPRS0.
`AT^SICS=0,"inactTO", "20"` `OK`	Inactivity timeout = 20s.
`AT^SICS=0,dns1,"193.254.160.1"` `OK`	IP address of Primary DNS server.

`AT^SICS=0,passwd,t-d1`
 	
`OK`
	Password for GPRS services provided by the German operator T-D1.

`AT^SICS=0,apn,"internet.t-d1.de"`
 	
`OK`
	APN to access the GPRS services provided by the German operator T-D1.

10.2 AT^SICI Internet Connection Information

The AT^SICI read command requests the current status of the Internet connection profiles currently defined with AT^SICS.

The AT^SICI write command displays the status of the specified Internet connection profile. If the connection profile is not defined yet, the command returns a "+CME ERROR" response.

Syntax

Test Command

AT^SICI=?

Response(s)

^SICI: (list of supported <conProfileId>s)
OK

Read Command

AT^SICI?

Response(s)

[^SICI: <conProfileId>, <conState>, <numServices>, <conAddr>]
[^SICI: ...]
OK

Write Command

AT^SICI=<conProfileId>

Response(s)

^SICI: <conProfileId>, <conState>, <numServices>, <conAddr>
OK
ERROR
+CME ERROR: <err>

PIN	✈	Last
-	-	-

Parameter Description

<conProfileId>(num)

Internet connection profile. Internet connection profile identifier as defined by AT^SICS (<conProfileId>).

0...5

<conState>(num)

State of the Internet connection profile.

0	Down - Internet connection is defined but not connected.
1	Connecting - A service has been opened and so the Internet connection is initated.
2	Up - Internet connection is established and usable by one or more services.
3	Limited Up - Internet connection is established, but temporarily no network coverage.
4	Closing - Internet connection is terminating.

<numServices>(num)

Number of services using this Internet connection profile.

0...9

<conAddr>(str)

Local IPv4 address of the Internet connection profile ("0.0.0.0" if no address is associated yet).

Notes

- Before opening a service profile based on a connection profile recently used, check with AT^SICI that the previous connection was properly closed. If AT^SICI confirms that the connection profile is in <conState> 0 (Down) the connection profile may be used again.
- If AT^SICI is used simultaneously on different instances only one request can be handled at a time. On the other instance(s) "+CME ERROR: operation temporary not allowed" will be displayed. If so, repeat the command on this instance.
- After closing the last service which uses this connection profile, parameter value <numServices> is decreased after the expiry of the inactivity timeout "inactTO" of AT^SICS only.

10.2.1 Checking Connection Profile Status

at^sici? ^SICI: 1,2,1,"10.10.0.161" OK	Query the current status of the connection profile. One connection profile has been created at <conProfileId>=1, and one service is opened using this connection profile. The Internet connection is in <conState>=2 ("Up").

Assume the network connection is temporarily not available. (If URC presentation mode of network registration is enabled the state is shown by the URC "+CREG: 2").

at^sici?	Query once again the current status of the connection profile.
^SICI: 1,3,1,"10.10.0.161"	Parameter <conState> has changed to state "Limited up".
OK	

The network connection is temporarily not available but the Internet connection is still established, so the host may decide to stop the data transfer to minimize the risk of losing data due to memory limitations.

at^sici?	Query once again the current status of the connection profile.
^SICI: 1,2,1,"10.10.0.161"	After re-establishing the network connection, <conState> reverts to state "Up".
OK	

Another service has been opened with AT^SISO:

at^sici?	Query once again the current status of the connection profile.
^SICI: 1,2,2,"10.10.0.161"	After opening another service, parameter <numServices> has increased.
OK	

After closing one service with AT^SISC:

at^sici?	Query once again the current status of the connection profile.
^SICI: 1,2,1,"10.10.0.161" OK	Parameter <numServices> has decreased.

After closing the last service with AT^SISC:

at^sici?	Query once again the current status of the connection profile.
^SICI: 1,2,1,"10.10.0.161" OK	The bearer is still open because of the inactivity timeout "inactTO" of AT^SICS.
at^sici?	Query the current status.
^SICI: 1,0,0,"0.0.0.0" OK	The inactivity timeout "inactTO" of AT^SICS has expired, therefore the bearer is closed now. Parameter <numServices> has decreased.

10.3 AT^SIPS Internet Profile Storage

AT^SIPS saves and loads the settings of the Internet connection and service profiles in the non-volatile memory. AT^SIPS can also be used to reset the settings to their default values without saving.

Syntax

Test Command

AT^SIPS=?

Response(s)

^SIPS: (list of supported <type>s), (list of supported <action>s), (list of supported <ProfileId>s)
OK

Write Command

AT^SIPS=<type>, <action>[, <ProfileId>]

Response(s)

OK
ERROR
+CME ERROR: <err>

PIN	✈	Last
-	+	-

Parameter Description

<type>(str)

Internet profile storage type parameter.

“connection“	Handle AT^SICS parameter set.
“service“	Handle AT^SISS parameter set.
“all“	Handle AT^SICS parameters AT^SISS parameters listed above.

<action>(str)

Internet profile storage action parameter

“reset“	Reset current profile(s) for given <type> to default settings without saving. If <ProfileId> is given only specific profile will be reset.
“save“	Stores current profile(s) for given <type>. If <ProfileId> is given only specific profile will be stored.
“load“	Loads current profile(s) for given <type>. If <ProfileId> is given only specific profile will be loaded.

<ProfileId>(num)

Internet connection or service profile storage identifier

0...9	In case of connection profile, max = 5, please see <conProfileId>. In case of a service profile, max = 9, please see <srvProfileId>. If parameter is omitted, AT^SIPS applies to all possible profile identifiers of used <type>.

10.4 AT^SISS Internet Service Setup Profile

AT^SISS serves to set up the necessary parameters in the Internet service profiles. Any service profile can then be used to control a data link in conjunction with AT^SISI, AT^SISO, AT^SISC, AT^SISR, AT^SISW, AT^SIST, AT^SISH and AT^SISE.

The AT^SISS read command requests the current settings of all Internet service profiles. One line is issued for every possible parameter of a given <srvParmTag> "srvType" value.

The AT^SISS write command specifies the parameters for a service profile identified by <srvProfileId>. At first the type of Internet service needs to be selected via <srvParmTag> value "srvType". This determines the applicability of all other <srvParmTag> values related to this "srvType" and sets their defaults. Changing the <srvParmTag> "srvType" of an existing service profile will reset all <srvParmTag> default values to suit the new "srvType".
To change the settings the write command needs to be executed for each single <srvParmTag>. All profile parameters set with AT^SISS are volatile. To save profile settings in non-volatile memory please refer to AT^SIPS.

The list below shows which <srvParmTag> parameters apply to each Internet service and which of them are mandatory (= m) or optional (= o).

Table 10.2: Applicability of AT^SISS <srvParmTag> values

<srvParmTag>	Socket	FTP	HTTP	SMTP
SrvType	m	m	m	m
conId	m	m	m	m
address	m	m	m	m
tcpMR	o	o	o	o
tcpOT	o	o	o	o
cmd		m	m	m
path		o		m
files		m		m
ftpath		o		
ftMode		o		
smFrom				m
smRcpt				m
smCC				o
smSubj				m
smMsg				m
smAuth				m
hcContent			o	
hcContLen			m	
hcAgent			o	
hcProp			o	
user		o	o	o
passwd		o	o	o

Syntax

Test Command

AT^SISS=?

Response(s)

OK

Read Command

AT^SISS?

Response(s)

^SISS: <srvProfileId>, <srvParmTag>, <srvParmValue>
[^SISS: ...]
OK
ERROR
+CME ERROR: <err>

Write Command

AT^SISS=<srvProfileId>, <srvParmTag>, <srvParmValue>

Response(s)

OK
ERROR
+CME ERROR: <err>

PIN ✈ Last

- + -

Parameter Description

<srvProfileId>(num)

Internet service profile identifier.
The <srvProfileId> is used to reference all parameters related to the same service profile. Furthermore, when using the AT commands AT^SISO, AT^SISR, AT^SISW, AT^SIST, AT^SISH and AT^SISC the <srvProfileId> is needed to select a specific service profile.

0...9

<srvParmTag>(u)

Internet service profile parameter.

srvType	Type of Internet service to be configured with consecutive usage of AT^SISS. For supported values of <srvParmValue> refer to <srvParmValue-srv-Type>.
user	User name string for FTP, HTTP, SMTP authentication. Parameter is optional: The user name can be set by <srvParmTag> parameter "user" and/or as part of "address" parameter. If set in both parameters at the same time, only the one given in the "address" parameter will be used, ignoring the one given in <srvParmTag> parameter "user". For HTTP only simple authentication is supported. Length: 32 octects
passwd	Password string for FTP, HTTP, SMTP authentication. Parameter is optional: The password can be set by <srvParmTag> parameter "passwd" and/or as part of the "address" parameter. If set in both parameters at the same time, only the one given in the "address" parameter will be used, ignoring the one given in <srvParmTag> parameter "passwd". Length: 32 octects
conId	Internet connection profile to be used, for details refer AT^SICS.

address

String value containing the URL for the specific service:
When GSM alphabet is enabled (see AT+CSCS) keep in mind that escape sequences are required for some special characters: For example, underscore "_" shall be escaped with \11. See also Section 1.8, Supported character sets for more information on character set and escape sequences.

1. Non-transparent Socket
   - TCP client URL
     "socktcp[s]://<host>:<remotePort>[;keepidle=<value>][;keepcnt=<value>][;keepintvl=<value>]"
   - TCP server URL
     "socktcp://listener:<localPort>[;keepidle=<value>][;keepcnt=<value>][;keepintvl=<value>]"
   - UDP endpoint URL
     "sockudp://:<localPort>"
   - UDP client URL
     "sockudp://<host>:<remotePort>[;port=<localPort>]"
2. Transparent Socket
   - Transparent TCP client
     "socktcp[s]://<host>:<remotePort>;etx[=<etxChar>][;timer=<value>][;keepidle=<value>][;keepcnt=<value>][;keepintvl=<value>]"
   - Transparent UDP client
     "sockudp://<host>:<remotePort>;etx[=<etxChar>][;timer=<value>]"
   - Transparent TCP Listener
     "socktcp://listener:<localPort>;etx[=<etxChar>][;timer=<value>][;autoconnect='0|1']
     [;connecttimeout=<value>][;keepidle=<value>][;keepcnt=<value>][;keepintvl=<value>][;addrfilter=<filter>]"

   Supported parameters for Socket services:
   - <host>: IPv4 address in standard dot format, e.g. "192.168.1.2".
   - <remotePort>: 1 ... 2^{16}-1 for the remote port number.
   - <localPort>: 1 ... 2^{16}-1 for the local port number.
   - "port": Local port of UDP client:
     0: Port number will be assigned from service (default).
     1...2^{16}-1: defines the local port number for the UDP client.
   - "etx": Parameter is mandatory for Transparent Socket. Otherwise Socket service is non-transparent.
   - "<etxChar>": Specifies the character used to change from transparent access mode to AT command mode.
     range: 1...15,17...255 (16 is not allowed because it is used as DLE (0x10))
     If parameter is not set no escaping is configured, thus requiring either +++ or DTR ON-OFF transition for changing to AT command mode. If value is set, the transmitted bytes are parsed for the DLE (0x10) character followed by the specified <etxChar> value. If both characters are found the service returns to AT command mode without transmitting these two bytes (same as +++).
     If you wish to send DLE characters as normal text string within your payload data the characters shall be doubled (DLE DLE).
   - "timer": The parameter configures the Nagle algorithm, which is used in transparent access mode.
     range: 20...[100]...500 milliseconds in steps of 20
   - "keepidle": specifies the TCP parameter TCP_KEEPIDLE (see RFC1122; not for Transparent UDP client)
     range: 1...65535 seconds, 0 disabled (default)

- "keepcnt": specifies the TCP parameter TCP_KEEPCNT (see RFC1122; not for Transparent UDP client); ignored if option "keepidle" is not set
  range: 1...[9]...127
- "keepintvl": specifies the TCP parameter TCP_KEEPINTVL (see RFC1122; not for Transparent UDP client); ignored if option "keepidle" is not set
  range: 1...[75]...255 seconds
- "autoconnect" (for Transparent TCP Listener service only):
  0 ... disabled (default) 1 ... automatically accept incoming client connects
- "connecttimeout": specifies the time after which incoming client connects are rejected automatically (for Transparent TCP Listener service only)
  range: 1...[30]...180 seconds
- "addrfilter": This option allows to filter incoming client connects based on the IP address of the client (for Transparent TCP Listener service only). It is possible to specify a maximum of 3 filters separated by commas. Each filter is specified as 4 numbers separated by dots ("<n>.<n>.<n>.<n>"). Each number n can be in the range between 0 and 254. It is allowed to use the wildcard "*" instead of n which matches all. The IP address of any incoming client connect does not match any of the specified filters, then the connect is rejected automatically. If the option is not specified, then all client connects are allowed.
  Example: "addrfilter=10.10.0.*,80.190.158.9" - allows connects from 10.10.0.81 and 80.190.158.9 but not from 10.10.17.81 and 80.190.158.10.

3. FTP
   "ftp[s]://[<user>:<passwd>@]<host>[:<port>/<path>]"
   "ftp://": The default TCP port 21 for ftp server is used.
   "ftps://": The default SSL port 990 for secure ftp server is used.
   <host>: element can be an IPv4 address, or a DNS FQDN string.
   <port>: element can be set optional and replace the default port.
   <user>: username for authentication, 32 octets. Can be set as part of "address" and/or separately by <srvParmTag> parameter "user". If set in both parameters at the same time, only the one given in the "address" parameter will be used, ignoring the one given in <srvParmTag> parameter "user".
   <passwd>: password for authentication, 32 octets. Can be set as part of "address" and/or separately by <srvParmTag> parameter "passwd". If set in both parameters at the same time, only the one given in the "address" parameter will be used, ignoring the one given in <srvParmTag> parameter "passwd".
   <path>: path of file or directory.
4. HTTP
   HTTP client URL
   Length: 6...255
   "http[s]://[<user>:<passwd>@]<server>[:<port>/<path>]"
   <server>: element can be an FQDN, or an IPv4 address.
   <path>: path of file or directory.
   <port>: If parameter is omitted the service connects to HTTP default port 80.
   <user>: username for authentication, 32 octets.
   <passwd>: password for authentication, 32 octets.
   "https://": Used for SSL connection.
   Refer to "IETF-RFC 2616".
5. SMTP
   "smtp[s]://[<user>:<passwd>@]<host>[:<Port>]"
   "smtp://": The default TCP port 25 for smtp server is used.
   "smtps://": The default SSL port 465 for secure smtp server is used.
   <host>: element can be an IPv4 address, or a DNS FQDN string.

<port>: element can be set optional and replace the default port.
<user>: username for authentication, 32 octets. Can be set as part of "address" and/or separately by <srvParmTag> parameter "user". If set in both parameters at the same time, only the one given in the "address" parameter will be used, ignoring the one given in <srvParmTag> parameter "user".
<passwd> is for authentication, 32 octets. Can be set as part of "address" and/or separately by <srvParmTag> parameter "passwd". If set in both parameters at the same time, only the one given in the "address" parameter will be used, ignoring the one given in <srvParmTag> parameter "address".

cmd

1. HTTP service
   - "0" or "get": Send HTTP GET request to server
   - "1" or "post": Send HTTP POST request to server
   - "2" or "head": Send HTTP HEAD request to server
2. FTP service
   - get [<OffsetString>]: get a single file from FTP server.
   - put [<OffsetString>]: create and write a single file to FTP server using AT^SISW.
   - dir: List the directory on the FTP server and show file size.
   - list: List the directory on the FTP server without showing file size.
   - fget: Get multiple files listed in <srvParmTag> parameter "files".
   - fput: Send one or multiple files listed in<srvParmTag> parameter "files".
   - size: Request the size of the file element on the FTP server. The size result is output as "^SIS" URC.
   - del: Delete a file on FTP server
   - append: Append data to existing file on FTP server
   - unique: Selects the FTP Store Unique command to create a file name unique to the current directory. If the file name is assigned by the server then the "^SIS" URC will appear, indicating <urcInfoId> 2100 and the file name.

   <OffsetString> is an optional parameter for "get" and "put". It allows resuming a broken uplink or downlink transfer to resend data. The <OffsetString> value specifies the offset in number of octets to start the transfer from. Maximum length is 16 digits. For "get" the <OffsetString> value must be calculated from the <urcInfoId> 2100 of the "^SIS" URC requested before by using "size".
3. SMTP service
   - files: send multiple files listed in the <srvParmTag> parameter "files". Max. 5 files allowed.
   - at: send a single attachment to the server. The content of the attachment should be provided using AT^SISW after the service was opened with AT^SISO.

path

Path on the local FFS. Specifies drive prefix and pathname.
Optional for FTP. Mandatory for SMTP.
Default: AT^SISS=<srvProfileId>,"path","file:///a:/".

ftpath

Specifies the path of the remote FTP server after login. If no path is set the default path will be used.

ftMode

Specifies the data transfer mode for FTP SIZE command. If not set, the default value will be used.

- "bin" or "BIN": binary mode.
- "asci" or "ASCI": ASCII mode.

files	Specifies single or multiple files: • Single file for upload to or download from servers in case of HTTP, FTP or SMTP. • List of files located on the FFS when "cmd" parameter is given with parameters "fput", "fget" or "files". Maximum 5 files can be handled, separated by comma.
hcContent	Optional parameter for HTTP method "Post". Length: 0...254 Can be used to transfer a small amount of data. The content of this string will only be sent if "hcContLen" = 0. To transmit a larger amount of data "hcContLen" must be set to a non-zero value. In this case the "hcContent" string will be ignored, and data transmission from the client to the server is done with AT^SISW.
hcContLen	Mandatory parameter if HTTP "post" is set with <srvParmTag> parameter "cmd". Length: 0...2^{31}-1 If "hcContLen" = 0 then the data given in the "hcContent" string will be posted without AT^SISW required. If "hcContLen" > 0 then AT^SISW command and "^SISW: x, 1" sequences will be used to send data from the client to the server. "hcContLen" may just be 1, or any other value > 0. There is no need to set the total amount of data with "hcContLen" (the given value would be ignored). The amount of data is determined only the by single AT^SISW commands. Data trasmission must be terminated with end-of-data flag: AT^SISW=x,0,1>. See <eodFlag> for more information.
hcUserAgent	The user agent string must be set by the application to identify the mobile. Usually operation system and software version info is set with this browser identifier. Length: 0...254
hcProp	Parameter for several HTTP settings. Length: 0...254 The general format is 'key': <space> 'value' Multiple settings can be given separated by "\0d\0a" sequences within the string, do not put them at the end. Possible 'key' values are defined at HTTP/1.1 Standard RFC 2616.
smFrom	Email sender address, i.e. "MAIL FROM" address (string). Length: 6...254 A valid address parameter consists of local part and domain name delimited by a '@' character, e.g. "john.smith@somedomain.de".
smRcpt	Recipient address of the email, i.e. "RCPT TO" address (string). Length: 6...254 If multiple recipient addresses are to be supplied the comma character is used as delimiter to separate individual address values, e.g. "john.smith@somedomain.de,tom.meier@somedomain.de". Some mail servers do not accept recipient addresses without brackets <>. It is recommended to use the "RCPT TO" variable with brackets.
smCC	CC recipient address of the email (string). Length: 6...254 If multiple CC recipient addresses are to be supplied the comma character is used as delimiter to separate individual address values, e.g. "john.smith@somedomain.de,tom.meier@somedomain.de".
smSubj	Subject content of the email (string). Length: 0...254 If no subject is supplied the email will be sent with an empty subject.

smAuth	SMTP authentication control flag (string). If "smAuth" = "0" or "none": No authentication (for test environment only, not applicable to real network) If "smAuth" = "1" or "plain": Authentication with PLAIN authentification If "smAuth" = "2" or "login": Authentication with LOGIN authentification If "smAuth" = "3" or "cram": Authentication with CRAM authentification
smMsg	SMTP message body. If no attachment is defined this is only the content of the email. Length: 0...254
tcpMR	Parameter can be used to overwrite the global AT^SCFG parameter "Tcp/MaxRetransmissions" <tcpMr> for a specific Internet Service connection profile. If the parameter is not specified the value specified with AT^SCFG will be used. Supported values <srvParmValue> for this parameter are the same as described for <tcpMr>. Setting is not relevant for Internet Service "Socket" with type "UDP".
tcpOT	Parameter can be used to overwrite the global AT^SCFG parameter "Tcp/OverallTimeout" <tcpOt> for a specific Internet Service connection profile. If the parameter is not specified the value specified with AT^SCFG will be used. Supported values <srvParmValue> for this parameter are the same as described for <tcpOt>. Setting is not relevant for Internet Service "Socket" with type "UDP".

<srvParmValue>(str)(+CSCS)

Parameter value; type and supported content depend on related <srvParmTag>.

<srvParmValue-srvType>(str)

Supported Internet service type values in <srvParmValue> for <srvParmTag> value "srvType".
Before changing the "srvType" of an existing service profile be sure that the profile is closed. To verify the connection state of the service profile enter the read command AT^SISI. Only when <srvState>=2 is returned for this specific service profile you can change its service type.

“Socket“	EHS6-A acting as client or server (listener) for TCP or UDP. "etx" subparameter in URL configures Transparent mode for Socket service. If EHS6-A is TCP listener at least two service profiles are required. The first socket profile must be configured as listener. The second service profile will be dynamically assigned when a socket connection request from a remote client is incoming. For this purpose, one service profile must be left free (= not configured with AT^SISS). An incoming socket connection request will be indicated by the "^SIS" URC, with the next free <srvProfileId> shown inside the URC as parameter <urcInfoId>. The connection request can be accepted or rejected by using the commands AT^SISO or AT^SISC and the ID retrieved from the "^SIS".
“Ftp“	EHS6-A acting as FTP client.
“Http“	EHS6-A acting as HTTP client.
“Smtp“	EHS6-A acting as SMTP client.
“none“	Reset Internet service profile settings. Operation is not allowed if profile is in use, i.e. it was activated via AT^SISO.

<srvParmValue-alphabet>(str)

Parameter not supported

Notes

- String parameters are truncated if greater than the maximum length specified above.
- If AT^SISS is used simultaneously on different instances only one request can be handled at a time. On the other instance(s) "+CME ERROR: operation temporary not allowed" will be displayed. If so, repeat the command on this instance.

10.5 AT^SISI Internet Service Information

AT^SISI serves to monitor the status of Internet service profiles defined with AT^SISS.

The AT^SISI read command requests the current status of all defined Internet service profiles.

The AT^SISI write command requests the status of the specified Internet service profile. If the specified service profile is not defined yet, "+CME ERROR" is returned.

Syntax

Test Command

```
AT^SISI=?
```

Response(s)

```
[^SISI:(list of defined <srvProfileId>s)]
OK
```

Read Command

```
AT^SISI?
```

Response(s)

If response is related to service profile(s) created / opened on this interface:

```
[^SISI: <srvProfileId>, <srvState>, <rxCount>, <txCount>, <ackData>, <unackData>]
[^SISI: ...]
```

If response is related to service profile(s) created / opened on other interface(s):

```
[^SISI: <srvProfileId>, <srvParmTag>value "srvType"]
[^SISI: ...]
OK
ERROR
```

Write Command

```
AT^SISI=<srvProfileId>
```

Response(s)

```
^SISI: <srvProfileId>, <srvState>, <rxCount>, <txCount>, <ackData>, <unackData>
OK
ERROR
+CME ERROR: <err>
```

PIN ✈ Last

- + -

Parameter Description

<srvProfileId>(num)

Internet service profile identifier as defined by AT^SISS (<srvProfileId>).

0...9

<srvState>(num)

Internet service state (for details see AT^SISO parameter <srvState>).

2	Allocated
3	Connecting
4	Up/Listening
5	Closing
6	Down
7	Alerting
8	Connected
9	Released

<rxCount>(num)

Number of bytes received via AT^SISR or AT^SIST since last successful AT^SISO write command.
This is the same value as displayed by the AT^SISO read command with the parameter <rxCount>.

<txCount>(num)

Number of bytes sent via AT^SISW or AT^SIST since last successful AT^SISO write command.
This is the same value as displayed by the AT^SISO read command with the parameter <txCount>.

<ackData>(num)

Number of data bytes already sent and acknowledged at TCP layer. Value 0 indicates that no sent data is acknowledged yet.
Parameter is not applicable to HTTP, SMTP, Socket with UDP. For these services the counter is always set to 0.

<unackData>(num)

Number of data bytes already sent but not yet acknowledged at TCP layer. A value 0 indicates that all sent data is already acknowledged.
This is the same value as displayed in the response of the AT^SISW write command with the parameter <unackData>.
Parameter is not applicable to HTTP, SMTP, Socket with UDP. For these services the counter is always set to 0.

Note

- If a service is in state "Down" or "Released" the responses for <rxCount>, <txCount>, <ackData> and <unackData> are the last known values for the service in the states "Connecting", "Up/Listening", "Connected" and "Closing".

10.6 AT^SISO Internet Service Open

The AT^SISO write command starts the Internet session configured by the service profile. All further steps needed to control the session depend on whether you are using URC mode or polling mode. The AT^SISO read command returns the current status of all Internet services.

URC mode (not for the Transparent TCP Listener service):
If the service opens successfully, the URCs "^SISW" and "^SISR" will trigger the action to follow, either writing data with AT^SISW or reading data with AT^SISR. To terminate an upload data stream set the <eodFlag> within the last AT^SISW command. If the URCs notify that a data transfer has been successful ("^SISR: x, 2" or "^SISW: x, 2"), the service can be closed with AT^SISC. If a special event occurs, e.g. an error or a warning, after opening or while using a service then the URC type "^SIS" will be delivered.

Polling mode:
After opening the service, all progress information needed to control the session shall be explicitly requested by the host application. The particular sequence of AT commands varies depending on the service used. The following list summarizes, by way of an example, the steps normally involved in managing an upload or download job.

- Upload (Socket, FTP, HTTP,SMTP):
  - Enter the AT^SISO command, e.g. AT^SISO=9.
  - Enter AT^SISW, specify <reqWriteLength>, e.g. AT^SISW=9,20. Check resulting response for <cnfWriteLength>. Optionally, check error with AT^SISE, e.g. AT^SISE=9. If necessary, repeat the sequence several times.
  - Enter last AT^SISW command and enable <eodFlag>, e.g. AT^SISW=9,0,1.
    If Socket service: Query available data with AT^SISR, e.g. AT^SISR=9,1430.
  - Check service state with AT^SISI, e.g. AT^SISI=9, if necessary several times until <srvState>=6 ("Down").
  - Check error with AT^SISE, e.g. AT^SISE=9.
  - Close service with AT^SISC, e.g. AT^SISC=9.
- Download (Socket, FTP, HTTP):
  - Enter the AT^SISO command, e.g. AT^SISO=9.
  - Enter AT^SISR, specify <reqReadLength>, e.g. AT^SISR=9,1000. Check resulting response for <cnfReadLength>. If necessary, repeat the sequence several times until <cnfReadLength>= -2 (end of data) or ERROR.
  - Check error with AT^SISE, e.g. AT^SISE=9.
  - Close service with AT^SISC, e.g. AT^SISC=9.
- Socket service (upload and download possible in one session):
  - Recommended: Set AT+CMEE=2 to enable extended error text.
  - Enter the AT^SISO command, e.g. AT^SISO=9.
  - Enter AT^SISR or AT^SISW, specifying <reqReadLength> or <reqWriteLength>, e.g. AT^SISR=9,20 or AT^SISW=9,20. Check resulting response for <cnfReadLength> or <cnfWriteLength>. If necessary, repeat the sequence several times.
  - Check error with AT^SISE, e.g. AT^SISE=9.
  - If write action: Enter last AT^SISW command and enable <eodFlag>, e.g. AT^SISW=9,0,1. [1)]
    If Socket service: Query available data with AT^SISR, e.g. AT^SISR=9,1430.
  - Close service with AT^SISC, e.g. AT^SISC=9.
- Transparent TCP client or Transparent UDP client:
  - Enter the AT^SISO command, e.g. AT^SISO=9.
  - Enter AT^SIST to enter transparent data mode. After communication has finished return to AT command mode via +++ escape sequence.
  - Check error with AT^SISE, e.g. AT^SISE=9.
  - Close service with AT^SISC, e.g. AT^SISC=9.

- Transparent TCP Listener:
  - Enter the AT^SISO command, e.g. AT^SISO=9.
  - Wait for URC "^SIS" which indicates a client connect.
  - If auto answering is not enabled enter AT^SIST to enter transparent access mode.
  - Wait for "CONNECT" which indicates that transparent access mode is active.
  - After communication has finished terminate the client connection using DTR toggle or AT^SISH after leaving the transparent access mode.
  - Close service with AT^SISC, e.g. AT^SISC=9.

Syntax

Test Command

```
AT^SISO=?
```

Response(s)

```
OK
```

Read Command

```
AT^SISO?
```

Response(s)

```
^SISO: <srvProfileId>, <srvType>[, <srvState>, <socketState>, <rxCount>, <txCount>, <locAddr>, <remAddr>, <rejCounter>]
[^SISO: ...]
OK
```

Write Command

```
AT^SISO=<srvProfileId>[, <optParam>]
```

Response(s)

```
OK
ERROR
+CME ERROR: <err>
```

PIN	✈	Last
±	-	-

Parameter Description

<srvProfileId>(num)

<srvProfileId> 0 ... 9 specified with AT^SISS.

<srvType>(str)

The type of the internet service as specified by the AT^SISS parameter <srvParmValue-srvType>.

<srvState>(num)

Internet service state.
Please note, that the state of an Internet service may influence the state of the serial DCD line. For details see description of value 2 for parameter <value> of command AT&C.

2	Allocated Service profile resources are allocated, i.e. at least the service type has been set (parameter <srvParmTag>, value "srvType" of AT^SISS). The service is not opened, but ready for configuration.

3	Connecting State after opening a service with AT^SISO where the connection is being established. If connection setup is successful the service proceeds to the state "4" (Up) and one of the URCs "^SISW" and "^SISR" may follow. If connection setup is not successful, the "^SIS" URC may appear and the service enters <srvState> 6 (Down). In the case of FTP, <srvState>=3 means that the command channel is being established. If the service profile is configured as Socket listener, then the listener always stays at <srvState>=3 and <socketState>=3 (LISTENER), while the <srvState> and <socketState> of the dynamically assigned service profile may change. See examples in Section 10.15.4 and Section 10.15.5.
4	Up The service performs its purpose. The data transfer process is the major function at this state. FTP: Data channel is up. SMTP: The SMTP service will not enter <srvState>=4 until the host has written the first data packet with AT^SISW.
5	Closing Internet Service is closing the network connection. FTP: Command channel is released.
6	Down This state is entered if - the service has successfully finished its session (see note on Socket), - the remote peer has reset the connection or - the IP connection has been closed because of an error (see note below on service or network errors). If a service in this state be sure to close it with AT^SISC before reopening it.
7	Alerting A client tries to connect to the Transparent TCP Listener service.
8	Connected A client is connected with the Transparent TCP Listener service.
9	Released The client has disconnected from the Transparent TCP Listener service but there are unread data. To go back into Up/Listening state read the pending data using AT^SIST or discard them by using AT^SISH.

<socketState>(num)

Socket state identifier.

1	Socket not assigned, i.e. no TCP/UDP connection active.
2	Socket assigned as CLIENT.
3	Socket assigned as LISTENER or UDP Endpoint.
4	Socket assigned as SERVER.

<rxCount>(num)

Number of bytes received via AT^SISR or AT^SIST since last successful AT^SISO write command.

<txCount>(num)

Number of bytes sent via AT^SISW or AT^SIST since last successful AT^SISO write command.

<locAddr>(str)

Recently used local IPv4 address in dotted-four-byte format and TCP port separated by colon, e.g. "192.60.10.10:80".

<remAddr>(str)

Remote IPv4 address in dotted-four-byte format and TCP port, separated by colon, e.g. "192.60.10.10:80".

<rejCounter>(num)

Number of automatically rejected client connects to a Transparent TCP Listener service because the service is already connected with a client (only relevant for Transparent TCP Listener services).

<optParam>(num)

[0]	Normal Operation like AT^SISO= <srvProfileId>
1	Show only service parameter of <srvProfileId>

Notes

- If the bearer cannot be established and AT^SISO returns an error there might be a general GSM/GPRS problem. To identify the reason you can take advantage of the AT+CEER command. Using AT+CEER is especially recommended when the <infoID> parameter of the AT^SISE command equals 0.
- If a service or network error occurs during an IP session and the "^SIS" URC or the AT^SISE command display an error message, the service enters <srvState>=5 and then 6, i.e. the IP connection is closed. In this case, the service still allows reading the data stored in the buffer, but writing data is denied. After reading, close the service and open it again.
- If an FTP connection is no longer available after network loss or server shutdown a 3-minute closing timeout for each of the two used sockets takes effect, adding up to 6 minutes. The timeout is effective if the AT^SISC is not sent. Please keep in mind that this time may vary depending on the settings of <tcpMr> and <tcpOt>.
- As in polling mode no error URCs are available you are advised to integrate the commands AT^SISI and AT^SISE into the command sequences for upload and download jobs. So, the AT^SISO command may be followed by AT^SISI to check that the service has entered the <srvState>=4 before sending AT^SISR, AT^SISW or AT^SIST. This helps you to detect errors even though the "^SIS" URCs are disabled. A typical example is that the service fails to be opened because the service profile contains a wrong destination address. In such a case, after opening with AT^SISO and OK response, the service quickly enters the states <srvState>=2, 4 and 6, with an error being returned no earlier than after sending the first AT^SISR or AT^SISW command. In URC mode, an error URC, such as "Host not found" would be received in this situation, but in polling mode the only way to detect the state is using AT^SISI or, alternatively, AT^SISO.

10.7 AT^SISC Internet Service Close

The AT^SISC write command closes the TCP/IP connection to the remote peer which was opened with AT^SISO. All resources are released, all status information parameters, e.g. <srvState>, <unackData>, <ackData>, <rxCount> and <txCount> counters, are reset. Only the initial configuration settings are preserved. The service can be restarted any time, using the same configuration or a new one.

Syntax

Test Command

```
AT^SISC=?
```

Response(s)

```
OK
```

Write Command

```
AT^SISC=<srvProfileId>
```

Response(s)

```
OK
ERROR
+CME ERROR: <err>
```

PIN	✈	Last
±	-	-

Parameter Description

<srvProfileId>(num)

0...9	<srvProfileId> specified with AT^SISS.

10.8 AT^SISR Internet Service Read Data

The AT^SISR command either triggers a read operation (download) or queries the number of bytes in the internal buffer.
The "^SISR: x, 1" URC is also used to report status changes of the transparent TCP service while the client is in AT command mode.

The AT^SISR write command may return the following errors:

- "+CME ERROR: operation temporary not allowed" e.g. if the service has not network resources allocated.
- "+CME ERROR: operation not allowed" e.g. if the service is not configured.

Syntax

Test Command

```
AT^SISR=?
```

Response(s)

```
OK
```

Write Command

```
AT^SISR=<srvProfileId>, <reqReadLength>
```

Response(s)

```
^SISR: <srvProfileId>, <cnfReadLength>[, <remainUdpPacketLength>[, <Udp_RemClient>]]
```

Number of data bytes are sent as specified by <cnfReadLength>. If peek operator was used no data bytes are sent.

```
OK
ERROR
+CME ERROR: <err>
```

PIN	✈	Last
-	-	+

Unsolicited Result Code

```
^SISR: <srvProfileId>, <urcCauseId>
```

Data availability status of the Internet service configured with AT^SISS has changed. The URC is issued when:

- data is available after opening an Internet service or
- less data was confirmed (in <cnfReadLength>) than requested (with <reqReadLength>) during the last "Read Data" operation and new data is available.

The URC is disabled in polling mode. See AT^SCFG, parameter "Tcp/WithURCs", <tcpWithUrc>.

Parameter Description

<srvProfileId>(num)

<srvProfileId> 0 ... 9 specified with AT^SISS. Transparent TCP Listener services are not supported.

<reqReadLength>(num)

0	Peek Operator: Query number of received bytes within internal buffers. The behaviour of the peek operator depends on the selected Internet service, i.e. it may not be supported by all IP Services. For "Socket" service configured for UDP the size of the next available UDP packet is returned.
1...1500	Requested number of data bytes to be read via the Internet service specified in <srvProfileId>.

<cnfReadLength>(num)

-2	Indicates end of data. Data transfer has been finished (all data have been read) and the service can be closed with AT^SISC.
-1	Applies only to HTTP: Querying number of available bytes is not supported by the HTTP service.
0	Indicates that no further data is available at the moment.
>0	Number of available data bytes. The range is determined by <reqReadLength>: If <reqReadLength> was greater than 0, then <cnfReadLength> may be less or equal to the value requested with <reqReadLength>. If <reqReadLength> equals 0 (peek operator) the value indicated by <cnfReadLength> may be greater than 1500.

<urcCauseId>(num)

Indicates whether or not data is available for reading with AT^SISR and AT^SIST.

1	*Meaning of value "1" for all services except Transparent TCP service:* Data is available and can be read by sending the AT^SISR command. The URC appears when less data was confirmed (in <cnfReadLength>) than requested (with <reqReadLength>) during the last "Read Data" operation and new data is available. *Meaning of value "1" for Transparent TCP service:* If the Transparent TCP service is in AT command mode the "^SISR: x, 1" URC notifies the client that the server has sent new data. In this case the client shall enter the AT^SIST command to go to transparent access mode and read the data.
2	End of data. Data transfer has completed (all data read). The service can be closed with AT^SISC.

<remainUdpPacketLength>(num)

Optional third parameter of the AT^SISR write command response displayed only if the Socket service uses the UDP protocol.
The reception of each datagram must be completed before the next datagram can be received. This may be a problem if the buffer of the host application is limited and not designed to handle the maximum packet size of 1500 bytes. To compensate this, the host is advised to request, via <reqReadLength>, an amount less or equal its maxmimum buffer capacity and wait for the resulting AT^SISR write command response with parameter <remainUdpPacketLength>. The benefit of this approach is that the host may properly receive all parts of a UDP datagram, as after each received data part the number of remaining bytes is synchronized, until reading the datagram is finished.
If the currently read datagram is smaller than the number of bytes requested by the host the <remainUdpPacketLength> parameter is omitted.
Further write attempts with AT^SISR are denied as long as the <remainUdpPacketLength> is unequal 0 or is not omitted. In this case the service returns "+CME ERROR: operation of service temporary not allowed".

0	Indicates that all bytes of the current UDP datagram are read.
(max. data size)-1...1	Indicates that the currently read UDP datagram is not yet complete. The displayed value is the remaining number of bytes. <remainUdpPacketLength> is unequal 0 until reading all parts of the current datagram is finished.

<Udp_RemClient>(str)

Service specific parameter of the AT^SISR write command response. If the Socket service is configured as UDP endpoint this parameter shows the IP address and the UDP port of the remote host that has sent the current UDP data. See example in Section 10.15.8, UDP Scenario.

10.8.1 Example: Socket Host Reads Small Amounts of UDP Data Packets (URC Mode)

This section applies only to the Socket service using the UDP protocol. The example shows how to read UDP packets if the buffer of the host application can handle only a few bytes. There are two datagrams available for reading.
Buffer size: 6 bytes
Datagram A = 18 bytes (content "THIS_IS_DATAGRAM_A")
Datagram B = 3 bytes (content "NEW")

`^SISR: 0,1`	Service profile 0 is configured for Socket service and UDP. The URC notifies host that data is available for reading.
`at^sisr=0,6`	The host requests to read 6 bytes.

`^SISR: 0,6,12`
`THIS_I`
`OK`
	The first 6 bytes of datagram A are confirmed and transmitted. Another 12 bytes are still available.

`at^sisr=0,6`	The host requests to read the next part of 6 bytes.

`^SISR: 0,6,6`
`S_DATA`
`OK`
	The next 6 bytes of datagram A are confirmed and transmitted. Another 6 bytes are still available.

`at^sisr=0,6`	The host requests to read the next part of 6 bytes.

`^SISR: 0,6,0`
`GRAM_A`
`OK`
	Last part of datagram A was received, no remainder is left.

`at^sisr=0,6`	Again, the host requests to read 6 bytes. This time, the request refers to datagram B which has only 3 bytes. As the read datagram is smaller than the size requested by the host, the response does not include the `<remainUdpPacketLength>`.

`^SISR: 0,3`
`NEW`
`OK`
	3 bytes are confirmed and transmitted. Datagram B was properly received.

10.9 AT^SISW Internet Service Write Data

AT^SISW triggers a write operation (upload) and queries the amount of data already sent, but not acknowledged at the TCP layer.

AT^SISW write command may return the following errors:

- "+CME ERROR: operation temporary not allowed" e.g. if the service has not network resources allocated.
- "+CME ERROR: operation not allowed" e.g. if the service is not configured.

Syntax

Test Command

```
AT^SISW=?
```

Response(s)

```
OK
```

Write Command

```
AT^SISW=<srvProfileId>, <reqWriteLength>[, <eodFlag>[, <Udp_RemClient>]]
```

Response(s)

```
^SISW: <srvProfileId>, <cnfWriteLength>, <unackData>
```
Number of data bytes as specified by <cnfWriteLength>.
```
OK
ERROR
+CME ERROR: <err>
```

PIN ✈ Last

± - +

Unsolicited Result Code

```
^SISW: <srvProfileId>, <urcCauseId>
```

Data availability status of the Internet service configured with AT^SISS has changed. The URC is issued when the service is ready to accept new user data. In this context the URC is also issued for the Transparent TCP or Transparent UDP client that supports data transfer via AT^SIST only.
URC is not supported for Transparent TCP Listener services.
URC is not supported for Non-Transparent UDP Client and Non-Transparent UDP Endpoint .
The URC is disabled in polling mode. See AT^SCFG, parameter "Tcp/WithURCs", <tcpWithUrc>.

Parameter Description

<srvProfileId>(num)

<srvProfileId> 0 ... 9 specified with AT^SISS. Transparent TCP Listener services are not supported.

<reqWriteLength>(num)

0...1500

Specifies the number of bytes to be sent with AT^SISW or, if set to 0, requests the amount of data already sent with AT^SISW but not yet acknowledged:

- Parameter <reqWriteLength> may be 1...1500 bytes to specify the amount of data to be sent with AT^SISW.
- If parameter <reqWriteLength> equals 0, AT^SISW does not expect any data, but a normal query is performed. This allows the application to explictly request, in particular at the end of an upload job, the amount of unacknowledged data at the TCP layer indicated by <unackData>.
- If Socket service is selected with UDP protocol
  - <reqWriteLength>=0 can be used to send an empty UDP packet;

- it is recommended that the size of each data packet be limited to 1460 bytes. Otherwise, it is possible that the following URC occurs: "^SIS: <id>, 0, 9, The supplied buffer was too small / large".

<eodFlag>(num)

End of data indication flag. See also Section 10.9.1.

[0]	No end of data. Other data may follow to be transmitted via the Internet service. Note for UDP Endpoint service: Value 0 must be set before <Udp_RemClient> parameter although <eodFlag> is not effective for UDP Endpoint.
1	End of data is signalled to the Internet Service. Further AT^SISW write commands return an error response. However, reading data may be possible. The <eodFlag> is effective only if the <reqWriteLength> equals <cnfWriteLength>, in particular if the <reqWriteLength> equals 0. End-of-data flag must be enabled for following actions: - FTP "cmd","put" (sending single file to FTP server) - SMTP "cmd","at" (sending attachment from AT command interface) - HTTP "cmd","post" if "hcContLen" is not equal zero (sending large amount of data)

<Udp_RemClient>(str)

Service specific parameter of the AT^SISW write command. If the Socket service is configured as UDP endpoint this parameter is mandatory and specifies the IP address (in dotted format) and the UDP port of the remote host. For each write request another IP address and UDP port may be given. See example in Section 10.15.8, UDP Scenario.

<cnfWriteLength>(num)

0...1500	Confirmed number of data bytes which can be transmitted via the Internet service configured in <srvProfileId>. This number may be less or equal to the value requested with <reqWriteLength>. The application has to deliver exactly the number of bytes indicated by <cnfWriteLength>. A 0 value means that no data can be written at this time, i.e. it serves as a flow control mechanism.

<unackData>(num)

Number of data bytes already sent but not yet acknowledged at the TCP layer.
The value is constantly changing until the entire upload job has completed. If the value equals 0 all data sent so far is acknowledged.
<unackData> includes the <cnfWriteLength> value of the pending write operation. Therefore, the very first write operation of an upload job returns identical values for <cnfWriteLength> and <unackData>.
This mechanism allows the host application to easily verify whether or not the remote host has successfully received the data.
Parameter is not applicable to HTTP, SMTP, Socket with UDP protocol. For these services the counter is always set to 0.

<urcCauseId>(num)

1	The service is ready to accept new user data.
2	Data transfer has been finished successfully and Internet service may be closed without loss of data.

Note

- Do not send any characters after AT^SISW command line termination (ATS3) until "^SISW" URC is received. This is necessary to avoid that any characters related to the AT command can be interpreted as being part of the data stream to be transferred. Also refer to Section 1.6, AT Command Syntax.

10.9.1 Usage of parameter <eodFlag>

Service type	
Socket	Parameter is optional for Socket services. Not applicable to Socket with UDP protocol, i.e. value is ignored. After the service accepts the end-of-data flag the service state changes to "Closing". No further user data is accepted. After releasing the TCP link the service remains in state "Down".
FTP	Parameter is mandatory for FTP "put" (sending single file to FTP server). After accepting the end-of-data flag the service state changes to "Closing" and starts to end the running FTP session. No further user data is accepted. After the FTP session is completed on FTP protocol level the service state switches to "Down". In case of successful completion the URC "^SISW: x,2" is generated.
SMTP	Parameter is mandatory for SMTP "cmd","at" (sending attachment from AT command interface. SMTP service sends some "closing" commands to the SMTP server which are necessary to mark the email as successfully sent on the server. The service enters "Closing" state and remains in it until the final protocol exchange with the SMTP server has been completed. The "OK" response following AT^SISW indicates that the SMTP service has accepted the last data - IT DOES NOT indicate the successful completion of the SMTP service. Successful completion will be indicated either by the appropriate URC "^SISW:x,2" or due to the fact that the SMTP service state changes to "Down" state without any error.
HTTP	Parameter is mandatory for HTTP "cmd","post" if "hcContLen" is not equal zero (sending large amount of data).

10.10 AT^SIST Enter Transparent Access Mode

AT^SIST applies to the Transparent TCP or Transparent UDP client service or to the Transparent TCP Listener service defined with AT^SISS.

Transparent Client Service:
AT^SIST can be used after the transparent client service has been opened with AT^SISO and is in "Up" state (<srvState>=4). If the service is not "Up" trying to open it will be denied with "+CME ERROR: operation temporary not allowed".
There are two ways to verify that the service is "Up": Each time after opening the service with AT^SISO wait for the "^SISW: x, 1" URC (if URC mode is enabled). In addition, or when using Polling mode, you can request the <srvState> with AT^SISO or AT^SISI.

Transparent TCP Listener service:
AT^SIST can be used after the Transparent TCP Listener service has been opened with AT^SISO, is in "Alerting" state (<srvState>=7), the URC with <urcCause> set to '3' was displayed and auto answering is disabled.

After entering the AT^SIST command, the CONNECT response notifies that the service has entered transparent access mode and is ready to transparently send and receive payload data over the serial interface.

There are several ways to quit the transparent access mode and revert to AT command mode:

- +++ escape sequence
- DTR ON-OFF transitions (see AT&D for configuring DTR line)
- "etx" parameter set within the server address for transparent access mode (see AT^SISS, <srvParmTag> "address".

Switching back and forth between both modes does not affect the underlying socket and has no influence on the service <srvState>.
If the service is in AT command mode the "^SISR: x, 1" URC appears once notifying the client that the server has sent new data. In this case, the client shall enter AT^SIST to go to transparent access mode and read out the new data.

If the transparent service is released by the remote side the following applies:

- If the service is in transparent access mode (CONNECT mode): ME returns to AT command mode, issues the 2 bytes 0x10 (DLE) and 0x04 (EOT) before the final result code "NO CARRIER" and goes to <srvState> 6 ("Down") for transparent client services and to 4 ("Up/Listening") for Transparent TCP Listener services. The presentation of the "NO CARRIER" result code depends on the ATV and ATQ settings.
- If the service is in AT command mode the "^SISR: x, 1" URC appears once notifying the client that the status of the transparent TCP service has changed. In this case, the client shall go to transparent access mode with AT^SIST in order to read remaining data (if any) and get the "NO CARRIER" result code. After this, the service changes to <srvState> 6 ("Down"). Otherwise, if the client does not go to transparent access mode after receiving "^SISR: x, 1" URC the service remains in <srvState> 4 ("Up") even though the remote server has shut down.
  In some cases, depending on the remote server and the network, it is possible that "^SIS" URCs may be reported, for example "^SIS" URCs with <urcInfoId> 15 ("Remote host has reset the connection") and 19 ("Socket has been shut down). See Section 10.14, Internet Service URC "^SIS" for a list of possible URCs.
- In all above scenarios, the Transparent service shall be closed with AT^SISC. Trying to return to transparent access mode with AT^SIST would only end up with "NO CARRIER" once again and is not recommended.
- Use AT^SISO and AT^SISI to check the <srvState>.

Syntax

Test Command
AT^SIST=?
Response(s)
OK

Write Command

AT^SIST=<srvProfileId>

Response(s)

CONNECT
(indicates that ME has entered transparent access mode)
OK
ERROR
+CME ERROR: <err>

PIN ✈ Last

± - +

Parameter Description

<srvProfileId>(num)

<srvProfileId> 0 ... 9 specified with AT^SISS.

10.11 AT^SISH Internet Listener Service Disconnect

The AT^SISH write command can be used for a Transparent TCP Listener service. It allows to disconnect an established client connection from server side.

Syntax

Test Command

AT^SISH=?

Response(s)

OK

Write Command

AT^SISH=<srvProfileId>[, <mode>]

Response(s)

OK
ERROR
+CME ERROR: <err>

PIN	✈	Last
-	-	-

Parameter Description

<srvProfileId>(num)

0...9	A Transparent TCP Listener service <srvProfileId> defined with AT^SISS.

<mode>(num)

Specifies disconnect mode.

[0]	Socket is closed with graceful option
1	Socket is closed without graceful option

10.12 AT^SISX Internet Service Execution

The AT^SISX command can be used to send ICMP (Internet Control Message Protocol) Echo Requests to a target IP address or DNS host name (also referred to as Ping command).
The AT^SISX write command can be used any time while a connection profile (bearer) is active. If used while no connection is active (no profile opened) then the AT^SISX "Ping" command tries to use the default APN (no APN name).
If the AT^SISX write command is executed for Ping, then the command returns one row for every ICMP Echo Request. The last Ping response line is followed by two lines to report a statistic calculated from the Echo Request responses. After starting the ping command the AT channel is blocked until all ICMP requests are executed. To stop the periodic ping early, send any character (user break).

Syntax

Test Command

```
AT^SISX=?
```

Response(s)

^SISX:"Ping", (list of supported <conProfileId>s), , (range of supported <request>s), (range of supported <timelimit>s)
OK

Write Command

```
AT^SISX=<service>, <conProfileId>, <address>[, <request>[, <timelimit>]]
```

Response(s)

In case of <pingInfoType>= 1: ICMP Echo Requests (1 - 30 rows)
^SISX:"Ping", <pingInfoType>, <conProfileId>, <ip-address>, <roundTripTime>
[...]

In case of <pingInfoType>= 2: Packet statistic (1 row)
^SISX:"Ping", <pingInfoType>, <conProfileId>, <sent>, <received>, <lost>, <lostPercent>

In case of <pingInfoType>= 3: Time statistic (1 row)
^SISX:"Ping", <pingInfoType>, <conProfileId>, <minRTT>, <maxRTT>, <meanRTT>

OK
ERROR
+CME ERROR: <err>

PIN	✈	Last
+	-	-

Parameter Description

<service>(str)

“Ping“	Ping host.

<conProfileId>(num)

The connection profile identifier as defined with AT^SICS for the connection to be used (see <conProfileId>). If the specified connection is not yet open, it will be opened implicitely.

<address>(str)

In case of "Ping" this is the target host as FQDN or IP address (i.e. "192.168.1.3"),

<ip-address>(str)

The IP address of the host (i.e. "192.168.1.3").

<request>(num)

[1]...30	Number of "Ping" ICMP Echo Requests to be sent.

<timelimit>(num)

200...[5000]...10000	Amount of time, in milliseconds, to wait for an ICMP Echo Response message related to a previously sent Echo Request message.

<pingInfoType>(num)

Indicate the type and format of the information given in the command responses (see syntax of the AT^SISX write command above).

1	Ping status received for the ICMP Echo Request(s). Depending on parameter <request> 1 - 30 rows. Address and Round Trip Time are returned for each request.
2	one row packet statistic calculated from the ping response(s) received for <pingInfoType>=1.
3	one row time statistics calculated from the ping response(s) received for <pingInfoType>=1 (displayed only if at least one Echo response message was received).

<roundTripTime>(num)

Round Trip Time in milliseconds. If the Echo Response message is not received within the time specified by <timelimit> the value -1 is returned (e.g. when the bearer shuts down during command execution).

<sent>(num)

Number of sent packets.

<received>(num)

Number of received packets.

<lost>(num)

Number of lost packets.

<lostPercent>(num)

Lost packets in percent.

<minRTT>(num)

Minimum Round Trip Time in milliseconds.

<maxRTT>(num)

Maximum Round Trip Time in milliseconds.

<meanRTT>(num)

Average Round Trip Time in milliseconds.

10.13 AT^SISE Internet Service Error Report

The AT^SISE write command returns the current error status of the specified Internet service profile. If the service profile is not defined or the value is invalid "+CME ERROR" response is returned.
The error status is identical to the content of the "^SIS" URC last issued.
If a service fails the commands AT^SISR, AT^SISW or AT^SIST will return an error response. However, if the AT^SISE command returns <infoID>=0 it is recommended to use the AT+CEER command because a general GSM/GPRS problem might be the reason.

Syntax

Test Command

```
AT^SISE=?
```

Response(s)

```
OK
```

Write Command

```
AT^SISE=<srvProfileId>
```

Response(s)

```
^SISE: <srvProfileId>, <infoID>[, <info>]
OK
ERROR
+CME ERROR: <err>
```

PIN	✈	Last
-	-	-

Parameter Description

<srvProfileId>(num)

Internet service profile identifier as defined by AT^SISS <srvProfileId>.

0...9

<infoID>(num)

Reason for Internet service error. This is a subset of the <urcInfoId>s which can be found in Section 10.14, Internet Service URC "^SIS".
The value 0 indicates there is no special Internet service error. In this case the application may use AT+CEER to check for general GSM/GPRS problems.

<info>(str)

Information text related to <infoID>. This is a subset of the <urcInfoText>s which can be found in Section 10.14, Internet Service URC "^SIS".

Note

- In particular cases, the AT^SISE command may deliver information and warnings. This applies the following services:
  FTP: Information 2100
  SMTP: Warnings
  If an error occurs the information and warning messages are overwritten by error messages.

10.14 Internet Service URC "^SIS"

This section first describes the syntax and the parameters of the "^SIS" URC. The second part consists of tables listing the information elements delivered within the "^SIS" URC and the command response of AT^SISE.

The presentation of the "^SIS" URC containing the parameter <urcCause>=0 can be disabled or enabled depending on whether polling mode or URC mode is preferred. To do so, use the AT^SCFG command, parameter "Tcp/WithURCs" (refer to <tcpWithUrc>). However, if related to <urcCause>=1, 2, 3 or 4, the "^SIS" URC will always be delivered regardless of the setting made with AT^SCFG.

Unsolicited Result Code

Indicates an event, an error or an information element. The same information can be obtained via AT^SISE.

^SIS: <srvProfileId>, <urcCause>[, [<urcInfoId>][, <urcInfoText>]]

The URC may appear if an event or an error occurs, for example after opening an Internet service with AT^SISO or any time during operation. The URC also indicates a request for a mobile terminated Internet service client connection, or a failure if a mobile terminated request is rejected. Furthermore, the URC may deliver an information element resulting from a specific command given in the service profile.

A list of possible causes can be found in the tables below. The tables contain the <urcInfoId> and, if applicable, a specific <urcInfoText>. If marked with *) the precise text related to a <urcInfoId> varies greatly depending on the scenario and the implementation of the remote server. In these cases, only a brief explanation of the scenario can be found in the table column "Description".

Parameter Description

<urcCause>(num)

URC cause identifier.

0	An event has occurred after opening or while using an Internet service. The event number is presented via <urcInfoId> and may be an error, a warning, an information element or a note. Optionally additional information may be supplied via <urcInfoText>.
1	Indicates that an opened Socket listener service is receiving a connection request from a remote client. The incoming socket connection is dynamically assigned to the next free Internet service profile. In this case, the parameter <urcInfoId> inside the "^SIS" URC equals the <srvProfileId> of the dynamically assigned service profile. This ID shall be used to accept the connection request with AT^SISO or to reject it with AT^SISC. The connection status may be requested by using the AT^SISI read or write command or the AT^SISO read command. Among other details, the response indicates the IP address of the remote client (parameter <remAddr>). This may be helpful to decide whether to accept or reject the request.
2	Incoming Socket service client connection has failed. The client request was rejected automatically because no free Internet service profile was available.
3	Indicates a incoming client connect for Transparent TCP Listener services. The parameter <urcInfoId> then indicates whether auto answering is active for the service (<urcInfoId>=1) or not. Parameter <urcInfoText> contains the remote IP address and the port of the connecting client. Example: "^SIS: 5,3,0,"192.168.105.17:1712" means that a client from host 192.168.105.17 tries to connect from port 1712 to our listening Transparent TCP Listener with profile 5. Auto answering is disabled.
4	Indicates that a connecting client for a Transparent TCP Listener service, which is allowed based on the used address filter (see option "addrfilter" for AT^SISS), was internally rejected, e.g. because connect timeout has expired (see option "connecttimeout" for AT^SISS). The URC is not generated if the

	connecting client is rejected because of the not matching address filter. If <urcCause> equals "4", then <urcInfoId> always equals "0". This cause is also used if ME is not in the transparent acces mode and a connected client has closed the connection remotely.
5	Only for TCP Listener, Non-Transparent UDP Client, Non-Transparent UDP endpoint. The service is ready to use.

<urcInfoId>(num)

Information identifier related to <urcCause>. See tables below for further detail. The <urcInfoId> number ranges indicate the type of information element:
0: Service is working properly.
1 - 2000: Error, service is aborted and enters <srvState>=6 (Down). Value 1000 notifies that service profile contains invalid parameter(s).
2001 - 4000: Information related to progress of service.
4001 - 6000: Warning, but no service abort.
6001 - 8000: Notes
Additional information for Socket service: As stated above, if a Socket connection request from a remote client is received (see <urcCause>=1) the <urcInfoId> equals the <srvProfileId> of the dynamically assigned free service profile.
If <urcCause> is 3, then <urcInfoId> is used as auto answer indicator. If the value is 0, then auto answering is disabled, if the value is 1, then auto answering is enabled.

<urcInfoText>(str)

Information text related to <urcCause>. See tables below for further detail. The maximum length of an information text is 255 bytes. Any longer messages will be truncated.
If <urcCause> is 3, then <urcInfoText> is used to indicate the IP address and port of the connecting client, e.g. "192.168.105.17:1712".

10.14.1 Information Elements Related to the Service Application

The following table lists the informatiomation elements which may be returned by all supported services within the "^SIS" URC and the command response of AT^SISE. It should be noted that TCP/IP socket problems may occur in all Internet service connections (Socket, Transparent TCP or Transparent UDP, FTP,HTTP or SMTP).

<urcInfoId>	<urcInfoText>	Description
Information Elements Returned by the TCP/IP socket		
2	Invalid socket descriptor	Socket error
3	Bad address specified	Socket error
4	Invalid operation	Socket error
5	No free socket descriptors	Socket error
6	The operation would block	Socket error
7	A previous attempt at this operation is still ongoing	Socket error
8	Socket is not bound	Socket error
9	The supplied buffer is too small / large	Socket error
10	Flags not supported	Socket error
11	Operation not supported	Socket error
12	The address is already in use	Socket error
13	The network is unavailable	Socket error

<urcInfoId>	<urcInfoText>	Description
14	An established connection was aborted (transmission time-out or protocol error)	Socket error
15	Remote host has reset the connection	Socket error
16	No buffer space available	Socket error
17	The socket is already connected	Socket error
18	For TCP/IP sockets, the socket is not connected	Socket error
19	Socket has been shut down	Socket error
20	Connection timed out	Socket error
21	Remote host has rejected the connection	Socket error
22	Remote host is unreachable	Socket error
23	An unexpected error occurred	Socket error
24	Host not found	DNS error
25	An error occurred that may be transient; a further attempt may succeed.	DNS error
26	An unrecoverable error occurred	DNS error
General Information Elements		
46	Fatal: The service has detected an unknown error	
47	*)	Indicates that the remote service has closed the connection. The host shall close the service.
48	Remote peer has closed the connection	Remote peer has closed the connection unexpectedly, and no data are available. The host shall close the service. Note that the "^SIS" URC only indicates the <urcInfoId>, but the AT^SISE command indicates both the <urcInfoId> and the <urcInfoText>.
49	Fatal: No memory is available for service action	
50	Fatal: Service has detected an internal error	
51	Application Task ID is not registered	
52	Fatal: Entity not supported	
53	No free Entity available	
54	Index not supported	
55	Service is not writeable	
56	Syntax error in URL	
57	Configuration Error	
58	No more data available	
59	Peek operation rejected	
60	Service don't accept further data	
61	Fatal: Service has no socket connection	
80		Connection profile not defined.
84	PPP LCP FAILED	PPP error
85	PAP Authentication failed	PPP error

<urcInfoId>	<urcInfoText>	Description
86	CHAP Authentication failed	PPP error
87	IPCP failed	PPP error
89	PDP: can not obtain controling task	
90	PDP: internal error 1	
91	PDP: internal error 2	
92	PDP: no authentication req	
93	PDP: internal error 3	
94	PDP: conection failed	
95	PDP: internal error 4	
96	PDP: no IP assigned	
97	PDP: no network	
98	PDP: network is not up	
99	PDP: internal error 5	
119	PDP: no DNS received	
120	DNS: no data	
121	DNS: timeout	
122	DNS: connection refused	
123	DNS: terminated lookup	
124	DNS: domain name is too long	
125	DNS: invalid server	
126	DNS: undefined error	
General Information Elements		
1000	PARA-ERR: <Info>	Notifies that service profile contains a wrong parameter. <Info> text indicates the service profile parameter that contains an error.
6001		General progress information for connection setup.

*) Text varies depending on scenario.

10.14.2 Information Elements Related to FTP Service

<urcInfoId>	<urcInfoText>	Description
2100	<info>	<info> text depends on FTP server implementation

10.14.3 Information Elements Related to HTTP Service

<urcInfoId>	<urcInfoText>	Description
Error URCs		
200	HTTP-ERR: Not connected - cannot send request HTTP-ERR: failed on sending request	
201	<HTTP Response Str>	Client error
202	<HTTP Response Str> HTTP-ERR: Service unavailable	Server error
203	HTTP-ERR: Redirect failed - too many redirects HTTP-ERR: Redirect failed - not allowed HTTP-ERR: Redirect failed - location missing	Max. number of allowed redirects: 6
204	HTTP-ERR: auth failed - user name or password missing HTTP-ERR: auth failed - user name or password wrong HTTP-ERR: Authority required for this URL HTTP-ERR: No access to this URL allowed	
Info URCs		
2200	HTTP Redirect to: <Host>:<Port> <Path>	
2201	HTTP Response <Response code> Example: ^SIS: 2,3,2201, "HTTP Response: HTTP/1.1 200 OK"	

10.14.4 Information Elements Related to SMTP Service

<urcInfoId>	<urcInfoText>	Description
Errors		
400	***)	Indicates that the SMTP service could not be executed successfully.
Warnings		
4400	***)	SMTP specific warning

***) Text varies depending on scenario.

10.15 Examples of how to Configure and Use Internet Service Profiles

Below you can find selective examples of how to configure and use Internet service profiles. To visualize the difference between URC mode and polling mode the operation of services (after opening with AT^SISO) is explained in separate examples for either mode.

For all examples it is assumed that a connection profile has been created as explained in Section 10.1.1.

When GSM alphabet is enabled (see AT+CSCS) keep in mind that escape sequences are required for some special characters: For example, underscore "_" shall be escaped with \11. See also Section 1.8, Supported character sets for more information on character set and escape sequences.

10.15.1 Selecting URC Mode or Polling Mode

To enable or disable the presentation of URCs for the Internet services use the AT^SCFG command, type "TcpIp/WithURCs" and select "on" or "off" for parameter <tcpWithUrc>.

```
at^scfg=tcp/withurcs                    Query the current setting.
^SCFG: "Tcp/WithURCs","on"              URC mode is enabled (delivery detault).
OK
at^scfg=tcp/withurcs,off                Select polling mode (by switching off URC mode).
^SCFG: "Tcp/WithURCs","off"             Polling mode is accepted.
OK
```

10.15.2 Configuring Socket Listener

Keep in mind that if the host is configured as listener another service profile must be left free to be dynamically assigned as Server when the listener receives a connection request from a remote client.

Configure the service profile 4 for use as Socket listener:

```
AT^SISS=4,srvType,"Socket"              Select service type Socket.
OK
AT^SISS=4,conId,0                       Select connection profile 0.
OK
AT^SISS=4,address,"socktcp://lis-       The host specifies its local port 65534 to be used for
tener:65534"                            the Socket listener service. The local IP address will
                                        be dynamically assigned when the service is opened
                                        with AT^SISO.
OK
```

Open the Socket service and query the IP address dynamically assigned to the Socket listener:

```
AT^SISO=4                               Open the Socket service.
OK
AT^SISO?                                Query the current status of services. All service pro-
^SISO: 0,""                             files are unused, except for service profile 4 which is
^SISO: 1,""                             running in listener mode, where <srvState>=3 (lis-
                                        tening) and <socketState>=3 (LISTENER). The
                                        response also indicates the IP address dynamically
                                        assigned to the listener.
^SISO: 2,""
^SISO: 3,""
^SISO: 4,"Socket",3,3,0,0,"10.10.0.187:65534","0.0.0.0:0"
^SISO: 6,""
^SISO: 7,""
^SISO: 8,""
```

```
^SISO: 9,""
OK
```

10.15.3 Configuring Socket Client for Calling a Socket Listener on Another Host

Configure the client's service profile 1 for calling a Socket listener on another host:

AT^SISS=1,srvType,"Socket" OK	Select service type Socket.
AT^SISS=1,conId,0 OK	Select connection profile 0.
AT^SISS=1,address,"socktcp:// 10.10.0.187:65534" OK	The service profile of the client contains the IP address and the TCP port of the remote host.

10.15.4 Accepting / Rejecting Socket Connect Request from Remote Client

Configuring Transparent Socket Listener with Autoconnect disabled.

AT^SISS=0,srvType,"Socket" OK	Select Socket for service profile 0 .
AT^SISS=0,conId,0 OK	Select connection profile 0.
AT^SISS=0,"address","socktcp:// 10.10.0.187:2000" OK	
AT^SISS=0,"tcpMR","3" OK	
AT^SISS=0,"tcpOT","5555" OK	
AT^SISS=1,"srvType","Socket" OK	Select Socket for service profile 1.
AT^SISS=1,conId,0 OK	Select connection profile 0.
AT^SISS=1,"address","socktcp://lis- tener:2000;etx=26;autoconnect=0" OK	"etx" configures Transparent mode. Autoconnect disabled.
AT^SISS=1,"tcpMR","3" OK	
AT^SISS=1,"tcpOT","5555" OK	

Starting Transparent Socket Listener

AT^SISO=1 OK	
^SIS: 1,5	Listener ready.

Reject incoming connect request:

^SIS: 1,1,2,"10.10.0.187:4099"	URC indicates incoming connect request.
AT^SISC=2	Listener rejects connect request, where 2 is the dynamically assigned service profile.
OK	

Accept incoming connect request:

^SIS: 1,1,2,"10.10.0.187:4098"	URC indicates incoming connect request.
AT^SISO=2	Listener accepts connect request, where 2 is the dynamically assigned service profile.
OK	
^SISW: 2,1	URC indicates that data transmission is possible.
AT^SIST: 2	Open transparent access mode.
CONNECT	Service enters transparent access mode.
Hello	For further handling see examples below, e.g. Section 10.15.10, Opening and Closing Transparent TCP Service, Section 10.15.11, Transparent TCP Client Receives Data While in AT Command Mode

10.15.5 Autoanswering Socket Connect Request from Remote Client

Configuring Transparent Socket Listener with Autoconnect enabled.

AT^SISS=0,srvType,"Socket"	Select Socket for service profile 0.
OK	
AT^SISS=0,conId,0	Select connection profile 0.
OK	
AT^SISS=0,"address","socktcp://10.10.0.187:2000"	
OK	
AT^SISS=0,"tcpMR","3"	
OK	
AT^SISS=0,"tcpOT","5555"	
OK	
AT^SISS=1,"srvType","Socket"	Select Socket for service profile 1
OK	
AT^SISS=1,conId,0	Select connection profile 0.
OK	
AT^SISS=1,"address","socktcp://listener:2000;etx=26;autoconnect=1"	"etx" configures Transparent mode. Autoconnect enabled.
OK	
AT^SISS=1,"tcpMR","3"	
OK	
AT^SISS=1,"tcpOT","5555"	
OK	

Starting Transparent Socket Listener

AT^SISO=1	
OK	
^SIS: 1,5	Listener ready.
AT^SISO=1,1	
^SISO: 1,"Socket",3,3,0,0,"10.10.0.187:2000","0.0.0.0:0"	
OK	
^SISW: 0,1	
^SISW: 1,1	
^SIS: 1,3,1,"10.10.0.187:4100"	URC indicates incoming connect request.
CONNECT	Service enters transparent access mode.

Hello .... OK AT^SISO=1,1 ^SISO: 1,"Socket",8,4,0,0,"10.10.0.187:2000","10.1 0.0.187:4100",0 OK	For further handling see examples below, e.g. Section 10.15.10, Opening and Closing Transparent TCP Service, Section 10.15.11, Transparent TCP Client Receives Data While in AT Command Mode Type +++ to return to AT command mode (+++ not visible in example).

10.15.6 Socket Client Sends Data via TCP Connection (Polling Mode)

The example uses service profile 0 configured for Socket service and TCP.

AT^SISO=0 OK AT^SISI=0	The host opens service profile 0. Note: URC ^SISW:0,1 does not appear! The host must poll the service state by means of AT^SISI until the service is in <srvState> "Up".
^SISI: 0,3,0,0,0,0 OK AT^SISI=0	The service is still in <srvState> "Connecting".
^SISI: 0,4,0,0,0,0 OK	The service is now in <srvState> "Up" and is ready to accept data.
AT^SISW=0,10 ^SISW: 0,10,10 0123456789 OK	The host requests to write 10 bytes. Response that 10 bytes can be sent and are unacknowledged.
AT^SISW=0,10,1 ^SISW: 0,0,10 OK	The host requests to write next 10 bytes and enables the <eodFlag>. But the service refuses the request, even the end-of-data flag remains without effect.
AT^SISW=0,10,1 ^SISW: 0,10,20 0123456789 OK	Next try (polling). Response that the service accepts 10 bytes and this data and the previously sent data are unacknowledged.
AT^SISW=0,0,0 ^SISW: 0,0,10 OK	Polling to request unacknowledged data. There are 10 bytes still unacknowledged.
AT^SISI=0 ^SISI: 0,5,0,20,10,10 OK	Polling for <srvState> change ("Closing" -> "Down"). 20 bytes are transfered via serial interface, 10 bytes are acknowledged by remote peer, 10 bytes are on the way.
AT^SISI=0 ^SISI: 0,6,0,20,20,0	Polling for <srvState> change ("Closing" -> "Down"). The Service is in state "Down" and all data is confirmed by the remote peer.

```
OK
AT^SISC=0                                   Closing the Socket service.
OK
```

10.15.7 Socket Client Sends Data via TCP Connection with URCs

The example uses service profile 0 configured for Socket service and TCP.

```
AT^SISO=0                                   The host opens service profile 0.
OK
^SISW: 0,1                                  Socket service is ready for upload.
AT^SISW=0,10                                The host requests to write 10 bytes.
^SISW: 0,10,10                              Response that 10 bytes can be sent and are unac-
                                            knowledged.
0123456789
OK
^SISW: 0,1                                  The URC indicates that the Socket service is ready
                                            to transfer more data. Data of the last AT^SISW
                                            command are transferred to the remote host.
AT^SISW=0,10,1                              The host requests to write next 10 bytes and enables
                                            the <eodFlag> to notify that these are the last 10
                                            bytes of the session.
^SISW: 0,10,20                              Response that the service accepts 10 bytes and this
                                            data and the previously sent data are unacknowl-
                                            edged.
0123456789
OK
------                                      Waiting for URC.
^SISW: 0,2                                  Data transfer has been finished.
AT^SISC=0                                   Closing the Socket service.
OK
```

10.15.8 UDP Scenario

The following example shows a communication between a UDP endpoint (host 1) and a UDP client (host 2).
Part 1 of the example refers to the UDP endpoint and shows the configuration which allows the UDP endpoint to communicate with any UDP client.
Part 2 shows the settings of a UDP client.
Part 3 and 4 are running in parallel: Part 3 shows the procedures on the UDP endpoint side done when communicating with a UDP client. Part 4 shows the equivalent steps done by the UDP client when communicating with the UDP endpoint.

Part 1 - host 1 is configured for use as UDP endpoint:

```
AT^SISS=0,srvtype,socket                    Select service type Socket.
OK
AT^SISS=0,conid,1                           Select connection profile 1.
OK
AT^SISS=0,address,"sockudp://:6666"         Specify the local UDP port.
OK
```

Part 2 - host 2 is configured for use as UDP client:

```
AT^SISS=1,srvtype,socket                    Select service type Socket.
OK
```

`AT^SISS=1,conid,1`	Select connection profile 1.
`OK`	
`AT^SISS=1,address,"sockudp://10.10.0.219:6666"`	Specify the address of host 1.
`OK`	

Part 3 - host 1 opens the service and communicates with host 2:

`AT^SISO=0`	Open the service.
`OK`	
`^SIS: 0,5`	URC indicates that host 1 is waiting (on UDP port 6666).
`AT^SISO=0,1`	
`^SISO: 0,"Socket",4,3,0,0,"10.10.0.219:6666","0.0.0.0:0"`	Request connection status.
`OK`	
`^SISR: 0,1`	URC indicates that host 2 has opened the connection to host 1 and has sent some data.
`AT^SISR=0,100`	Host 1 requests to read 100 bytes.
`OK`	
`^SISR: 0,22,"10.10.0.222:6561"` `Hello, I'm the client!`	Host 1 is reading the text string received from host 2 (see part 4 of the example) and gets information about the remote client, i.e. the address of host 2.
`OK`	
`AT^SISW=0,25,0,"10.10.0.222:6561"`	Host 1 starts sending 25 bytes to host 2.
`^SISW: 0,25,0`	Host 1 is sending the message "Hi, I'm the UDP endpoint!" (25 bytes) to host 2. As a result, host 2 is receiving the URC "^SISR: 1,1" shown below in part 4 of the example.
`OK`	
`^SISW: 0,1`	URC confirms that host 1 can send data again.
`AT^SISC=0`	Close the service.
`OK`	

Part 4 - host 2 opens the service and communicates with host 1:

`AT^SISO=1`	Open the service.
`OK`	
`^SIS: 0,5`	URC indicates that host 2 can send data.
`AT^SISO=1,1`	
`^SISO: 1,"Socket",4,2,0,0,"10.10.0.222:6561","10.10.0.219:6666"`	Request connection status.
`OK`	
`AT^SISW=1,22`	Host 2 starts to write 22 bytes.
`^SISW: 1,22,0`	Host 2 is writing the message "Hello, I'm the client!" (22 bytes). As a result, host 1 is receiving the URC "^SISR: 0,1" shown above in part 3 of this example.
`OK`	
`^SISW: 1,1`	URC confirms that host 2 could send data.
`^SISR: 1,1`	URC indicates that host 2 has received data from host 1.
`AT^SISR=1,100`	Host 2 requests to read 100 bytes.
`^SISR: 1,25` `Hi, I'm the UDP endpoint!`	Response indicates that host 2 has received 25 characters from host 1.
`OK`	

AT^SISC=1 OK	Close the service.

10.15.9 Creating Transparent TCP Socket Client

AT^SISS=1,srvType,"Socket" OK	Select service type "Socket".
AT^SISS=1,conId,1 OK	Select connection profile 1.
AT^SISS=1,address,"socktcp:// 10.10.0.110:9996;etx;timer=200" OK	Specify server address. Add "etx" parameter to set Transparent mode.

10.15.10 Opening and Closing Transparent TCP Service

AT^SISO=1 OK	Open Transparent TCP service.
^SISW: 1,1	URC indicates that Transparent TCP service is ready.
at^sist=1 CONNECT OK	Open transparent access mode. Service is ready to send or receive data. Client is sending data, e.g Good Morning (not visible in example). Client types +++ to return to AT command mode (+++ not visible in example).
at^sisi=1 ^SISI: 1,4,0,16,16,0 OK	Check the service state of service profile 1. Service is in state "Up" (4). 0 bytes received, 16 bytes sent and acknowledged.
AT^SISO? ^SISO: 0,"" ^SISO: 1,"Socket",4,2,0,16,"10.10.0.200:1024","10. 10.0.108:65532" ^SISO: 2,"" ^SISO: 3,"" ^SISO: 4,"" ^SISO: 5,"" ^SISO: 6,"" ^SISO: 7,"" ^SISO: 8,"" ^SISO: 9,"" OK	Check the service state of service profile 1. Service is in state "Up" (4). Socket is assigned. 0 bytes received, 16 bytes sent. Local and remote IP address are assigned.
at^sici? ^SICI: 0,2,1,"10.10.0.200" OK	Check the state of the Internet connection profile. Internet connection profile is in state "Up". Local IP address is assigned.
AT^SISC=1 OK	Close the service.
at^sisi=1 ^SISI: 1,2,0,0,0,0 OK	Check the service state of service profile 1. Service profile 1 is in state "Allocated" (2).
AT^SISO?	Check the service state of service profile 1.

^SISO: 0,""	
^SISO: 1,"Socket",2,1,0,0,"0.0.0.0:0","0.0.0.0:0"	Service is in state "Allocated" (2). Socket not assigned.
^SISO: 2,""	
^SISO: 3,""	
^SISO: 4,""	
^SISO: 5,""	
^SISO: 6,""	
^SISO: 7,""	
^SISO: 8,""	
^SISO: 9,""	
OK	
at^sici?	Check the state of the Internet connection profile.
^SICI: 0,0,0,"0.0.0.0"	No Internet connection profile currently used.
OK	

10.15.11 Transparent TCP Client Receives Data While in AT Command Mode

AT^SISO=1	Open Transparent TCP service.
OK	
^SISW: 1,1	URC indicates that Transparent TCP service is ready.
at^sist=1	Open transparent access mode.
CONNECT	Service is ready to send or receive data.
Hello	Client is reading received data. Client types +++ to return to AT command mode (+++ not visible in example).
OK	
^SISR: 1,1	URC indicates that new data is available for the client.
at^sist=1	Return to transparent access mode.
CONNECT	Service is ready to send or receive data.
Goodbye	Client is reading received data. Client types +++ to return to AT command mode (not visible in example).
OK	
at^sisi=1	Check the service state of service profile 1.
^SISI: 1,4,12,6,6,0	Service is in state "Up" (4). 12 bytes received, 6 bytes sent and acknowledged.
OK	
AT^SISO?	Check the service state of service profile 1.
^SISO: 0,""	
^SISO: 1,"Socket",4,2,12,6,"10.10.0.200:1025","10.10.0.108:65532"	Service is in state "Up" (4). Socket is assigned. 12 bytes received, 6 bytes sent. Local and remote IP address are assigned.
^SISO: 2,""	
^SISO: 3,""	
^SISO: 4,""	
^SISO: 5,""	
^SISO: 6,""	
^SISO: 7,""	
^SISO: 8,""	
^SISO: 9,""	
OK	

at^sici?	Check the state of the Internet connection profile.
^SICI: 0,2,1,"10.10.0.200"	Internet connection profile is in state "Up". Local IP address is assigned.
OK	
AT^SISC=1	Close the service.
OK	
at^sisi=1	Check the service state of service profile 1.
^SISI: 1,2,0,0,0,0	Service profile 1 is in state "Allocated" (2).
OK	
AT^SISO?	Check the service state of service profile 1.
^SISO: 0,""	
^SISO: 1,"Socket",2,1,0,0,"0.0.0.0:0","0.0.0.0:0"	Service is in state "Allocated" (2). Socket not assigned.
^SISO: 2,""	
^SISO: 3,""	
^SISO: 4,""	
^SISO: 5,""	
^SISO: 6,""	
^SISO: 7,""	
^SISO: 8,""	
^SISO: 9,""	
OK	
at^sici?	Check the state of the Internet connection profile.
^SICI: 0,0,0,"0.0.0.0"	No Internet connection profile currently used.
OK	

10.15.12 Server Disconnects While Transparent TCP Service is in Transparent Access Mode

AT^SISO=1	Open Transparent TCP service.
OK	
^SISW: 1,1	URC indicates that Transparent TCP service is ready.
at^sist=1	Open transparent access mode.
CONNECT	Service is ready to send or receive data.
Good Morning NO CARRIER	Server has sent data and disconnected. Client reads data. Then client gets NO CARRIER in AT command mode.
at^sisi=1	Check the service state of service profile 1.
^SISI: 1,6,12,0,0,0	Service is in state "Down" (6). 12 bytes received.
OK	
AT^SISO?	Check the service state of service profile 1.
^SISO: 0,""	
^SISO: 1,"Socket",6,2,12,0,"10.10.0.200:1026","10.10.0.108:65532"	Service is in state "Down" (6). Socket is assigned. 6 bytes received. 12 bytes sent. Local and remote IP address are assigned.
^SISO: 2,""	
^SISO: 3,""	
^SISO: 4,""	
^SISO: 5,""	
^SISO: 6,""	
^SISO: 7,""	
^SISO: 8,""	
^SISO: 9,""	
OK	

at^sici?	Check the state of the Internet connection profile.
^SICI: 0,2,1,"10.10.0.200"	Internet connection profile is in state "Up". Local IP address is assigned.
OK	
AT^SISC=1	Close the service.
OK	
at^sisi=1	Check the service state of service profile 1.
^SISI: 1,2,0,0,0,0	Service profile 1 is in state "Allocated" (2).
OK	

10.15.13 Server Disconnects While Transparent TCP Service is in AT Command Mode and Data is Pending

AT^SISO=1	Open Transparent TCP service.
OK	
^SISW: 1,1	URC indicates that Transparent TCP service is ready.
at^sist=1	Open transparent access mode.
CONNECT	Service is ready to send or receive data.
Good Morning	Client is reading data. Client types +++ to return to AT command mode (not visible in example).
OK	
^SISR: 1,1	Remote server has sent data and closed the connection (not visualized in this example). URC indicates that remaining data is available for reading.
at^sisi=1	Check service state of service profile 1.
OK	
^SISI: 1,4,12,3,3,0	Service profile 1 is in state "Up" (4). 12 bytes received. 3 bytes sent and acknowledged.
OK	
AT^SISO?	Check the service state of service profile 1.
^SISO: 0,""	
^SISO: 1,"Socket",4,2,12,3,"10.10.0.200:1027","10.10.0.108:65532"	Service is in state "Up" (4). Socket is assigned. 12 bytes received. 3 bytes sent. Local and remote IP address are assigned.
^SISO: 2,""	
^SISO: 3,""	
^SISO: 4,""	
^SISO: 5,""	
^SISO: 6,""	
^SISO: 7,""	
^SISO: 8,""	
^SISO: 9,""	
OK	
at^sist=1	Return to transparent access mode.
CONNECT	Service is ready to send or receive data.
Good bye	Client reads remaining data. Then client gets NO CARRIER in AT command mode.
NO CARRIER	
at^sisi?	Check service state of service profile 1.
^SISI: 1,6,20,3,3,0	Service is in service "Down" state (6). 20 bytes received. 3 bytes sent and acknowledged.
OK	
AT^SISO?	Check the service state of service profile 1.
^SISO: 0,""	

^SISO: 1,"Socket,20,3,"10.10.0.200:1027","10.10.0.108:65532"	Service is in state "Down" (6). Socket is assigned. 20 bytes received. 3 bytes sent. Local and remote IP address are assigned.
^SISO: 2,"" ^SISO: 3,"" ^SISO: 4,"" ^SISO: 5,"" ^SISO: 6,"" ^SISO: 7,"" ^SISO: 8,"" ^SISO: 9,"" OK	
AT^SISC=1 OK	Close the service.
at^sisi=1 ^SISI: 1,2,0,0,0,0 OK	Check service state of service profile 1. Service profile 1 is in state "Allocated" (2).
AT^SISO? ^SISO: 0,"" ^SISO: 1,"Socket",2,1,0,0,"0.0.0.0:0","0.0.0.0:0" ^SISO: 2,"" ^SISO: 3,"" ^SISO: 4,"" ^SISO: 5,"" ^SISO: 6,"" ^SISO: 7,"" ^SISO: 8,"" ^SISO: 9,"" OK	Check the service state of service profile 1. Service is in state "Allocated" (2). Socket is not assigned. Local and remote IP address not assigned.

10.15.14 FTP Download to FFS (URC Mode)

Configure the service profile 1 for FTP:

AT^SISS=1,srvType,"Ftp" OK	Select service type FTP.
AT^SISS=1,conId,"0" OK	Select connection profile 0.
AT^SISS=1,address,"ftp://ftp.heise.de/pub" OK	Specify FTP address.
AT^SISS=1,cmd,"fget" OK	Select command type download.
AT^SISS=1,user,"anonymous" OK	
AT^SISS=1,passwd,"tester@google.com" OK	
AT^SISS=1,path,"file:///a:/data/" OK	Specify target path on local FFS.
AT^SISS=1,files,"INDEX" OK	Specify file to be downloaded.

Make an FTP connection:

AT^SISO=1 OK	Open the service. Bearer is established, service is getting started.

^SIS: 1,0,2100,"Ftp open(ftp.heise.de:21)"	"^SIS" URC with <urcInfoId> 2100 (FTP) indicates download status.
^SIS: 1,0,2100,"220 Hallo auf ftp.heise.de."	
^SIS: 1,0,2100,"FTP Login OK"	
^SIS: 1,0,2100,"fget INDEX"	
^SIS: 1,0,2100,"FGET : INDEX 225 bytes"	
^SISR: 1,2	Download complete.
AT^SISO?	Request service state.
^SISO: 1,"Ftp",4,1,225,0,"37.80.21.126:4113","193.99.144.79:21"	
AT^SISC=1	Close the service.
OK	
AT^SISO?	Request service state.
^SISO: 1,"Ftp",2,1,0,0,"0.0.0.0:0","0.0.0.0:0"	Service is closed and reset.

10.15.15 FTP Upload Single File (URC Mode)

Configure the service profile 2 for FTP:

AT^SISS=2,"srvType","Ftp"	Select service type FTP.
OK	
AT^SISS=2,conId,"0"	Select connection profile 0.
OK	
AT^SISS=2,"address","ftp://myname:mypasswd@testnetwork/upload"	Specify FTP address with individual user name and password.
OK	
AT^SISS=2,"cmd","put"	Select command type upload for single file.
OK	
AT^SISS=2,"files","newdata.txt"	File "newdata.txt" shall be put on FFTP server.
OK	

Make an FTP connection:

AT^SISO=2	Open the service.
OK	Bearer is established, service is getting started.
^SIS: 2,0,2100,"Ftp open(testnetwork:21)"	"^SIS" URC with <urcInfoId> 2100 (FTP) status information from FTP server.
^SIS: 2,0,2100,"220 FTP server (Version 6.4/OpenBSD/Linux-ftpd-0.17) ready."	
^SIS: 2,0,2100,"FTP Login OK"	
^SIS: 2,0,2100,"put newdata.txt"	
^SISW: 2,1	URC indicates that FTP service is ready for upload.
AT^SISW=2,40	Client requests to send 40 bytes.
^SISW: 2,40,0	The write command response confirms that 40 bytes must be transferred now.
0123456789012345678901234567890123456789	User data is transferred.
OK	
^SISW: 2,1	URC indicates that the FTP service is ready to transfer more data.
AT^SISW=2,40	Client requests to send 40 bytes.
^SISW: 2,40,0	The write command response confirms that 40 bytes must be transferred now.
0123456789012345678901234567890123456789	User data is transferred.
OK	

^SISW: 2,1	URC indicates that the FTP service is ready to transfer more data.
AT^SISW=2,0,1	No more data available. <eodFlag> set. File "newdata.txt" shall be closed on FTP server.
^SISW: 2,0,0	
OK	
^SIS: 2,0,2100,"226 Transfer complete."	
^SISW: 2,2	URC indicates that data transfer finished successfully. Connection to the FTP server closes.
AT^SISC=2	Close the FTP service.
OK	

10.15.16 HTTP Download Using TLS

Configure the service profile 4 for HTTPS:

AT^SISS=4,srvType,"Http"	Select service type HTTP.
OK	
AT^SISS=4,conId,"0"	Select connection profile 0.
OK	
AT^SISS=4,address,"https://www.facebook.com"	Specify access to Facebook website (always secured).
OK	
AT^SISS=4,cmd,"get"	Select command type download.
OK	

Opening connection:

AT^SISO=4	Open the service.
OK	
^SISS: 4,0,2200,"Http www.facebook.com:443"	
^SISR: 4,1	URC indicates that the HTTP service is ready to read data.
AT^SISR=4,1000	Read 1000 bytes.
^SISR: 4,1000	
<?xml version="1.0" encoding="utf-8"?> <!DOCTYPE html PUBLIC "-//WAPFORUM//DTD XHTML Mobile 1.0//EN" "http://www.wapforum.org	
OK	
AT^SISR=4,1000	Repeat reading data n times.
^SISR: 4,1000	
....	
^SISR: 4,2	URC indicates that data transfer finished successfully. Connection to the HTTP server closes.
AT^SISC=4	Close the HTTP service.
OK	

10.15.17 HTTP Post

Configure the service profile 6 for HTTP:

AT^SISS=6,srvType,"Http"	Select service type HTTP.
OK	
AT^SISS=6,conId,"0"	Select connection profile 0.

```
OK
AT^SISS=6,"address","http://testnetwork/      Specify URL.
cgi/first.pl"
OK
AT^SISS=6,"user","myuser"                     Specify user name.
OK
AT^SISS=6,"passwd","mypasswd"                 Specify password.
OK
AT^SISS=6,cmd,"post"                          Select command type download.
OK
AT^SISS=6,"hcContent"," "                     Parameter is ignored.
OK
AT^SISS=6,"hcContLen","2"                     "hcContlen" greater than "0". Data wil be sent from
                                              AT command interface.
OK
```

Opening connection:

```
AT^SISO=6                                     Open the service.
OK
^SISS: 6,0,2200,"Http pegasus.testnetz.sw5:80"


^SISW: 6,1                                    URC indicates that the HTTP service is ready to
                                              send data.
AT^SISW=6,30                                  Send 30 bytes.
^SISW: 6,30,0
OK
^SISW: 6,1                                    URC indicates that the HTTP service is ready to
                                              send data.
AT^SISW=6,30                                  Send 30 bytes.
^SISW: 6,30,0
OK
^SISW: 6,1                                    URC indicates that the HTTP service is ready to
                                              send data.
AT^SISW=6,0,1                                 Finish input by setting <eodFlag> and start HTTP
                                              POST request.
^SISW: 6,0,0
OK
^SISW: 6,2                                    URC confirms: all data sent to server.
OK
^SIS: 6,0,2200,"HTTP POST: http://testnetwork/cgi/first.pl"


6,0,2200,"HTTP POST Response: 200"
^SISR: 6,1                                    Read response from server.
^SISR: 6,500                                  Read 500 bytes.
^SISR: 6,197                                  Reading 197 bytes.
Hello ..... Goodbye
OK
^SISR: 6,1                                    All data read.
AT^SISC=6                                     Close the HTTP service.
OK
```

10.15.18 SMTP Sending Mail with Attachment from FFS

Configure the service profile 9 for FTP:

`AT^SISS=9,srvType,"Smtp"`	Select service type SMTP.
`OK`	
`AT^SISS=9,conId,"1"`	Select connection profile 1.
`OK`	
`AT^SISS=9,address,"smtps://User-name@gmail.com:********@smtp.gmail.com"`	Specify SMTP server address, enter user name and password for SMTP authentication.
`OK`	
`AT^SISS=9,smSubj,"My Test Mail"`	Enter text for subject field.
`OK`	
`AT^SISS=9,smFrom,"subscriber1@gemalto.com"`	Sender's email address.
`OK`	
`AT^SISS=9,smRcpt,"subscriber2@gmail.com,subscriber3@gemalto.com"`	Recipients' email addresses.
`OK`	
`AT^SISS=9,smAuth,"login"`	Type of authentication: Sender name and password are used for SMTP authentication.
`OK`	
`AT^SISS=9,smMsg,"This is the message for mail testing."`	Write message text.
`OK`	
`AT^SISS=9,path,"file:///a:/data/"`	Specify path on local FFS.
`OK`	
`AT^SISS=9,cmd,"files"`	Send attachment located on FFS.
`OK`	
`AT^SISS=9,files,"flower.jpg"`	
`OK`	

Sending Mail:

`AT^SISO=9`	Open the service, i.e.start sending the mail.
`OK`	
`^SISS: 9,0,4400,"Smtp open(smtp.gmail.com:465)"`	
`^SISS: 9,4400,"SSL-Info: TLS, 3.3, TLS\11ECDHE\11RSA\11WITH\11RC4\11128\11SHA"`	
`^SISS: 9,0,4400,"SSL-Cert: C=US;O=Google Inc;CN=Google Internet Authority"`	
`^SISS: 9,0,4400,"220 mx.google.com ESMTP f49sm37686972eec.7 - gsmtp"`	
`^SISS: 9,0,4400,"250-mx.google.com at your service, \1b<37.80.21.126\1b>"`	
`^SISS: 9,0,4400,"Auth OK"`	
`^SISS: 9,0,4400,"Mail send OK"`	
`^SISW: 9,2`	URC confirms that data transfer finished successfully.
`AT^SISC=2`	Close SMTP service.
`OK`	

10.15.19 Ping

The following example shows a Ping output:

`AT^SICS=0,conType,GPRS0`	Select connection type GPRS0.
`OK`	

```
AT^SICS=0,apn,"GPRS02.point.de"
AT^SISX="Ping",0,192.168.1.2,4,2000
^SISX: "Ping",1,0,"192.168.1.2",1043
^SISX: "Ping",1,0,"192.168.1.2",586
^SISX: "Ping",1,0,"192.168.1.2",531
^SISX: "Ping",1,0,"192.168.1.2",415

^SISX: "Ping",2,1,4,4,0,0
^SISX: "Ping",3,1,415,1043,643
OK
```

11. Packet Domain Related Commands

The AT commands described in this chapter allow the Customer Application to control packet switched services.

11.1 AT+CGACT PDP context activate or deactivate

The AT+CGACT write command is used to activate or deactivate the specified PDP context(s). After the command has completed, the MT remains in V.250 command state. If any PDP context is already in the requested state, the state for that context remains unchanged. If the MT is not PS attached when the activation form of the command is executed, the MT first performs a PS attach and then attempts to activate the specified contexts.

The AT+CGACT read command returns the current activation states for all the defined PDP contexts.

The AT+CGACT test command is used for requesting information on the supported PDP context activation states.

Syntax

Test Command

```
AT+CGACT=?
```

Response(s)

```
+CGACT: (list of supported <state>s)
OK
```

Read Command

```
AT+CGACT?
```

Response(s)

```
+CGACT: [<cid>, <state>]
[+CGACT: <cid>, <state>]
...
OK
```

Write Command

```
AT+CGACT=<state>[, <cid>[, <cid>]]
```

Response(s)

```
+CGACT: [<cid>, <state>]
[+CGACT: <cid>, <state>]
...
OK
ERROR
+CME ERROR: <err>
```

PIN	✈	Last
+	+	-

Reference(s)

3GPP TS 27.007 [44]

Parameter Description

<state>(num)

Indicates the state of PDP context activation.

0	Detached
[1]	Attached

<cid>(num)

Parameter specifies a particular PDP context definition (see AT+CGDCONT parameter <cid>). The parameter is used in other PDP context-related commands.

Notes

- A maximum of 3 contexts can be activated at the same time, no matter on which interface. Note that, depending on the provider, the number of activated contexts may be further restricted.
  Remember that contexts may be activated implicitly by using other commands, e.g. AT+CGDATA or ATD*99#.
- If activation or deactivation of a context fails, then AT+CEER may provide further informations about the reason.

11.2 AT+CGANS Manual response to a network request for PDP context activation

The AT+CGANS write command requests EHS6-A to respond to a network request for Packet Domain PDP context activation which has been signaled to the TE by the "RING" or "+CRING: GPRS" URC. The <response> parameter allows the TE to accept or reject the request.
This is not the same as if the MT issues a AT+CGDATA or AT+CGACT command after receiving a +CRING unsolicited result code. A AT+CGDATA or AT+CGACT does not command the MT to acknowledge the network request but rather to make a new request for context activation. The network request would be ignored.

Syntax

Test Command

```
AT+CGANS=?
```

Response(s)

```
+CGANS: (list of supported <response>s), (list of supported <L2P>s)
OK
```

Write Command

```
AT+CGANS=[<response>[, <L2P>[, <cid>]]]
```

Response(s)

```
CONNECT
NO CARRIER
ERROR
+CME ERROR: <err>
```

PIN	✈	Last
+	-	+

Reference(s)

3GPP TS 27.007 [44]

Parameter Description

<response>(num)

[0]	The request is rejected and EHS6-A returns OK to the TE
1	Accept the request

<L2P>(str)

String parameter which indicates the layer 2 protocol to be used (see AT+CGDATA command)

<cid>(num)

Numeric parameter which specifies a particular PDP context definition (see AT+CGDCONT command).

Note

- If <response> is 1, the following procedure is followed by EHS6-A:
  If the <L2P> parameter value is unacceptable to EHS6-A, then it will return an "ERROR" or "+CME ERROR: <err>" response. Otherwise, EHS6-A issues the intermediate result code CONNECT and enters V.250 online data state.
  A <cid> may be specified for use in the context activation request.
  During the PDP startup procedure EHS6-A has the PDP type and the PDP address provided by the network in the Request PDP context activation message. If this is in conflict with the information provided by a specified <cid>, the command will fail. There will be no conflict, if the PDP type matches exactly and the PDP address given by the context definition for <cid> is empty or matches exactly with the address specified with the network PDP context activation message.
  The context will be activated using the values for PDP type and address provided by the network, together

with all other information found in the PDP context definition.
If no <cid> is given or if there is no matching context definition, EHS6-A will attempt to activate the context using the values for PDP type and address provided by the network. The other parameters will be set to their default values (see AT+CGDCONT).
If activation is successful, data transfer will proceed.
After data transfer is complete, and the layer 2 protocol termination procedure has completed successfully, the V.250 command state is reentered and EHS6-A returns the final result code OK.
In the event of an erroneous termination or a failure to start up, the V.250 command state is re-entered and EHS6-A returns the final result code NO CARRIER, or if enabled, "+CME ERROR: <err>". Attach, activate and other errors may be reported. It is also an error to issue the AT+CGANS command when there is no pending network request.
The command can be used in both normal and modem compatibility modes.

11.3 AT+CGATT GPRS attach or detach

The AT+CGATT write command is used to attach the MT to, or detach the MT from the Packet Domain service. After the command has completed, the MT remains in V.250 command state. If the MT is already in the requested state, the command is ignored and the OK response is returned. Any active PDP contexts will be automatically deactivated when the attachment state changes to detached.

The AT+CGATT read command returns the current Packet Domain service state.

The AT+CGATT test command is used for requesting information on the supported Packet Domain service states.

Syntax

Test Command

```
AT+CGATT=?
```

Response(s)

```
+CGATT: (list of supported <state>s)
OK
```

Read Command

```
AT+CGATT?
```

Response(s)

```
+CGATT: <state>
OK
```

Write Command

```
AT+CGATT=[<state>]
```

Response(s)

```
OK
ERROR
+CME ERROR: <err>
```

PIN	✈	Last
+	-	-

Reference(s)

3GPP TS 27.007 [44]

Parameter Description

<state>(num)

Indicates the state of Packet Domain attachment. The parameter is global for all interfaces.

0(P)	Detached
[1]	Attached

11.4 AT+CGAUTO Automatic response to a network request for PDP context activation

The AT+CGAUTO write command disables or enables an automatic positive response (auto-answer) to the receipt of a Request PDP Context Activation message from the network. It also provides control over the use of the V.250 basic commands ATS0, ATA and ATH for handling network requests for PDP context activation.

Syntax

Test Command

```
AT+CGAUTO=?
```

Response(s)

```
+CGAUTO: (list of supported <n>s)
OK
```

Read Command

```
AT+CGAUTO?
```

Response(s)

```
+CGAUTO: <n>
OK
```

Write Command

```
AT+CGAUTO=[<n>]
```

Response(s)

```
OK
ERROR
+CME ERROR: <err>
```

PIN	✈	Last
+	-	-

Reference(s)

3GPP TS 27.007 [44]

Parameter Description

<n>(num)	
0	Disable automatic response for network requests for PDP context activation. Packet Domanin network requests are manually accepted or rejected by the AT+CGANS command.
1	Enable automatic response for network requests for PDP context activation. Packet Domain requests are automatically accepted according to the description below.
2	Modem compatibility mode. Packet Domain only.
3(P)	Modem compatibility mode. The automatic acceptance of both Packet Domain and incoming circuit switched calls is controlled by the ATS0 command. Manual control uses the ATA and ATH commands, respectively, to accept or reject Packet Domain network requests or incoming circuit switched calls.
4	Turn on automatic negative response for Packet Domain only.

Notes

- When the AT+CGAUTO=0 command is received, the MT will not perform a PS detach if it is attached. Subsequently, when the MT announces a network request for PDP context activation by issuing the URC RING or CRING, the TE may manually accept or reject the request by issuing the AT+CGANS command or may simply ignore the network request.

- When the AT+CGAUTO=1 command is received, the MT will attempt to perform a PS attach if it is not yet attached. Failure will result in ERROR or, if enabled +CME ERROR being returned to the TE. Subsequently, the MT announces a network request for PDP context activation by issuing the URC RING to the TE, followed by the intermediate result code CONNECT. The MT then enters V.250 online data state and follows the same procedure as it would after having received a +CGANS=1 with no <L2P> or <cid> values specified.
- If a PS attach will be initiated by this command and the MT is not able to attach for more than 385 seconds (timer T3310 expired), command returns with "ERROR" or "+CME ERROR: unknown", but MT is still trying to attach and the requested automatic mode <n> is in use.
- If a network request for PDP context activation is answered automatically and if another AT command is issued at the same time on the same interface, then this AT command is not executed. Any response belongs to the automatic context activation procedure. If the AT command which caused the collision was a circuit switched data call, the CONNECT response does not belong to this data call but to the PS. This can be detected if ATX is not set to 0. CS data call will issue CONNECT <text>, PS will issue CONNECT only.

11.5 AT+CGDATA Enter data state

The AT+CGDATA write command causes the MT to perform all actions which are necessary to establish communication between the TE and the network using one or more PDP types. This may include performing a PS attach and one or more PDP context activations. Commands following the AT+CGDATA command in the AT command line will not be processed by the MT.
If no <cid> is given or if there is no matching context definition, the MT will attempt to activate the context with PDP type IP and all other context parameters set to their default values (see AT+CGDCONT, AT+CGQREQ, AT+CGQMIN).
If the <L2P> parameter is omitted, the layer 2 protocol is unspecified and PPP will be used.
If the write command is successful, the MT issues the intermediate result code CONNECT and enters V.250 online data state.
After data transfer is complete, and the layer 2 protocol termination procedure has completed successfully, the command state is reentered and the MT returns the final result code OK.
If the <L2P> parameter value is unacceptable to the MT, the MT returns ERROR or +CME ERROR.
In the event of erroneous termination or a failure to start up, the command state is reentered and the MT returns NO CARRIER, or if enabled +CME ERROR.

The AT+CGDATA test command is used for requesting information on the supported layer 2 protocols to be used between the TE and MT.

Syntax

Test Command

```
AT+CGDATA=?
```

Response(s)

```
+CGDATA: (list of supported <L2P>s)
OK
```

Write Command

```
AT+CGDATA=[<L2P>[, <cid>[, <cid>]]]
```

Response(s)

```
CONNECT
NO CARRIER
ERROR
+CME ERROR: <err>
```

PIN	✈	Last
+	-	+

Reference(s)

3GPP TS 27.007 [44]

Parameter Description

<L2P>(str)

Layer 2 protocol to be used between the TE and MT.

["PPP"]	Layer 2 protocol PPP

<cid>(num)

Parameter specifies a particular PDP context definition (see AT+CGDCONT parameter <cid>). The parameter is used in other PDP context-related commands.

11.5.1 Automatic deactivation of PDP context during dial-up PPP

When using the AT+CGDATA write command or ATD*99# the MT issues the intermediate result code CONNECT and enters V.250ter online data state. In V.250 online data state, first some LCP protocol exchange between MT and TE is performed to set up the PPP link. After successfully establishing the PPP link, the MT performs the PDP context activation procedure if the context is not already activated. As a result, the MT is in a "PDP context activated" state within the PLMN, the PPP link is established on the mobile side and the mobile is ready for IP data transfer.
If the TE wants to close the LCP link the MT may perform an LCP termination request procedure on PPP level. After this LCP termination procedure the MT deactivates the PDP context automatically and the MT returns to V.250 command mode and issues the final result code NO CARRIER.
During the implicit PDP context deactivation procedure after LCP termination the TE may change into V.250 command state (e.g. by using +++ or by toggling DTR if AT&D is set to 1) before the result NO CARRIER occurs. In this case the application should not try to deactivate the PDP context by using the commands AT+CGACT or ATH. If DTR is configured to disconnect data connections (AT&D2), then the application should not toggle DTR during the implicit PDP context deactivation and before "NO CARRIER" is received.

11.6 AT+CGDCONT Define PDP Context

The AT+CGDCONT write command specifies the parameters for a PDP context identified by the context identifier <cid>. The number of contexts that may be in a defined state at the same time is given by the range indicated in the test command response. A special form of the write command (AT+CGDCONT=<cid>) causes the values for context <cid> to become undefined.
The AT+CGDCONT read command returns the current settings for each defined PDP context.
The AT+CGDCONT test command returns supported values as a compound value.

Check of ACL (APN Control List):
The ACL will be checked only if a USIM is inserted. Before performing of context definition it will be checked if the ACL-service is enabled and activated (3GPP TS 31.102 version 9.3.0 , sections 4.2.8 and 4.2.47). If yes all APNs from ACL of EFACL of USIM will be read out and compared with the requested APN.

- If the requested APN is listed in the ACL the context definition will be performed.
- If the requested APN is empty ("") and ACL contains "network provided APN" the context definition will also be requested.
- If the APN is not listed in the ACL the command returns CME ERROR: 4 or CME ERROR: Operation not supported.
- If the ACL-service is not enabled or not activated in the USIM or a GSM-SIM is inserted the context definition will be performed without any checks.

Syntax

Test Command

```
AT+CGDCONT=?
```

Response(s)

```
+CGDCONT: (range of supported<cid>s), <PDP_type>, , , (list of supported <d_comp>s), (list of supported <h_comp>s)
OK
ERROR
+CME ERROR: <err>
```

Read Command

```
AT+CGDCONT?
```

Response(s)

```
[+CGDCONT: <cid>, <PDP_type>, <APN>, <PDP_addr>, <d_comp>, <h_comp>]
[+CGDCONT: ...]
OK
ERROR
+CME ERROR: <err>
```

Write Command

```
AT+CGDCONT=[<cid>[, <PDP_type>[, <APN>[, <PDP_addr>]]]]
```

Response(s)

```
OK
ERROR
+CME ERROR: <err>
```

PIN	✈	Last
+	+	-

Reference(s)

3GPP TS 27.007 [44]

Parameter Description

`<cid>`(num)(NV)

PDP Context Identifier

Parameter specifies a particular PDP context definition. The parameter is used in other PDP context-related commands. The range of the permitted values for `<cid>` is given by the `AT+CGDCONT` test command.

`<PDP_type>`(str)(NV)

Packet Data Protocol type

Specifies the type of the packet data protocol.

“IP“	Internet Protocol (IETF STD 5)

`<APN>`(str)(NV)

Access Point Name

The logical name that is used to select the GGSN or the external packet data network. If the value is null or omitted, then the subscription value will be requested.

`<PDP_addr>`(str)(NV)

Packet Data Protocol address

Identifies the MT in the address space applicable to PDP (e.g. IP V4 address for PDP type IP). If the value is null or omitted, then a value may be provided by the TE during the PDP startup procedure or, failing that, a dynamic address will be requested. The read command will continue to return the null string even if an address has been allocated during the PDP startup procedure. The allocated address may be read using `AT+CGPADDR`.

`<d_comp>`(num)(NV)

Data Compression

Controls the PDP data compression (applicable for Subnetwork Dependent Convergence Protocol (SNDCP) only) 3GPP TS 44.065

[0]	off

`<h_comp>`(num)(NV)

Header Compression

Controls the PDP header compression 3GPP TS 44.065, 3GPP TS 25.323

[0]	off

Note

- The MT supports PDP type IP only.

11.7 AT+CGCMOD PDP Context Modify

The AT+CGCMOD write command can be used to modify the specified PDP context(s) with respect to QoS profiles and TFTs. If no <cid>s are specified then all active contexts will be modified.
If modification of a context fails, then AT+CEER may provide further informations about the reason.

The AT+CGCMOD test command returns a list of <cid>s associated with active contexts which could be modified.

Syntax

Test Command

AT+CGCMOD=?

Response(s)

+CGCMOD: (list of <cid>s associated with active contexts)
OK
ERROR
+CME ERROR: <err>

Write Command

AT+CGCMOD=[<cid>[, <cid>]]

Response(s)

OK
ERROR
+CME ERROR: <err>

PIN	✈	Last
+	-	-

Reference(s)

3GPP TS 27.007 [44]

Parameter Description

<cid>(num)

Parameter specifies a particular PDP context definition (see AT+CGDCONT parameter <cid>).

11.8 AT+CGEQMIN Rel. 99 Quality of Service Profile (Minimum acceptable)

The AT+CGEQMIN write command allows the TE to specify a Quality of Service Profile for the context identified by the (local) context identification parameter <cid> which is checked by the MT against the negotiated profile returned in the Activate/Modify PDP Context Accept message.
A special form of the write command, AT+CGEQMIN=<cid> causes the requested profile for context number <cid> to become undefined.

The AT+CGEQMIN read command returns the current settings for each defined context.

The AT+CGEQMIN test command returns values supported as a compound value. Definitions of parameters can be found in 3GPP TS 24.008 [39], subclause 10.5.5.6 and 3GPP TS 23.107 [37].

Syntax

Test Command

AT+CGEQMIN=?

Response(s)

+CGEQMIN: <PDP_type>, (list of supported <Traffic class>s), (list of supported <Maximum bitrate UL>s), (list of supported <Maximum bitrate DL>s), (list of supported <Guaranteed bitrate UL>s), (list of supported <Guaranteed bitrate DL>s), (list of supported <Delivery order>s), (list of supported <Maximum SDU size>s), (list of supported <SDU error ratio>s), (list of supported <Residual bit error ratio>s), (list of supported <Delivery of erroneous SDUs>s), (list of supported <Transfer delay>s), (list of supported <Traffic handling priority>s), <Source Statistics Descriptor>, <Signaling Indication>
OK

Read Command

AT+CGEQMIN?

Response(s)

[+CGEQMIN: <cid>, <Traffic class>, <Maximum bitrate UL>, <Maximum bitrate DL>, <Guaranteed bitrate UL>, <Guaranteed bitrate DL>, <Delivery order>, <Maximum SDU size>, <SDU error ratio>, <Residual bit error ratio>, <Delivery of erroneous SDUs>, <Transfer delay>, <Traffic handling priority>, <Source Statistics Descriptor>, <Signaling Indication>]
[+CGEQMIN: ...]

Write Command

AT+CGEQMIN=[<cid>[, <Traffic class>[, <Maximum bitrate UL>[, <Maximum bitrate DL>[, <Guaranteed bitrate UL>[, <Guaranteed bitrate DL>[, <Delivery order>[, <Maximum SDU size>[, <SDU error ratio>[, <Residual bit error ratio>[, <Delivery of erroneous SDUs>[, <Transfer delay>[, <Traffic handling priority>[, <Source Statistics Descriptor>[, <Signaling Indication>]]]]]]]]]]]]]]]]

Response(s)

OK
ERROR
+CME ERROR: <err>

PIN	✈	Last
+	+	-

Reference(s)

3GPP TS 27.007 [44]

Parameter Description

<cid>(num)(NV)

Parameter specifies a particular PDP context definition (see AT+CGDCONT parameter <cid>). The parameter is used in other PDP context-related commands.

<Traffic class>(num)(NV)

[0]	conversational
1	streaming
2	interactive
3	background

<Maximum bitrate UL>(num)(NV)

This parameter indicates the maximum number of kbits/s delivered to UMTS (up-link traffic) at a SAP. As an example a bitrate of 32kbit/s would be specified as 32 (e.g. AT+CGEQMIN=...,32,...).

[0]	subscribed value
1...63	
64...568	(value needs to be divisible by 8 without remainder)
576...8640	(value needs to be divisible by 64 without remainder)
8700...16000	(value needs to be divisible by 100 without remainder)

<Maximum bitrate DL>(num)(NV)

This parameter indicates the maximum number of kbits/s delivered by UMTS (down-link traffic) at a SAP. As an example a bitrate of 32kbit/s would be specified as 32 (e.g. AT+CGEQMIN=...,32,...).

[0]	subscribed value
1...63	
64...568	(value needs to be divisible by 8 without remainder)
576...8640	(value needs to be divisible by 64 without remainder)
8700...16000	(value needs to be divisible by 100 without remainder)

<Guaranteed bitrate UL>(num)(NV)

This parameter indicates the guaranteed number of kbits/s delivered to UMTS (up-link traffic) at a SAP (provided that there is data to deliver). As an example a bitrate of 32kbit/s would be specified as 32 (e.g. AT+CGEQMIN=...,32,...).

[0]	subscribed value
1...63	
64...568	(value needs to be divisible by 8 without remainder)
576...8640	(value needs to be divisible by 64 without remainder)

<Guaranteed bitrate DL>(num)(NV)

This parameter indicates the guaranteed number of kbits/s delivered by UMTS (down-link traffic) at a SAP (provided that there is data to deliver). As an example a bitrate of 32kbit/s would be specified as 32 (e.g. AT+CGEQMIN=...,32,...).

[0]	subscribed value
1...63	

64...568	(value needs to be divisible by 8 without remainder)
576...8640	(value needs to be divisible by 64 without remainder)

`<Delivery order>`(num)(NV)

This parameter indicates whether the UMTS bearer shall provide in-sequence SDU delivery or not.

[0]	no
1	yes

`<Maximum SDU size>`(num)(NV)

This parameter indicates the maximum allowed SDU size in octets.

[0]	
10...1500	(value needs to be divisible by 10 without remainder)
1502	
1510	
1520	

`<SDU error ratio>`(str)(NV)

This parameter indicates the target value for the fraction of SDUs lost or detected as erroneous. SDU error ratio is defined only for conforming traffic. The value is specified as "mEe". As an example a target SDU error ratio of $5*10^{-3}$ would be specified as "5E3" (e.g. AT+CGEQMIN=...,"5E3",...).

[“0E0“]	subscribed value
“1E2“	
“7E3“	
“1E3“	
“1E4“	
“1E5“	
“1E6“	
“1E1“	

`<Residual bit error ratio>`(str)(NV)

This parameter indicates the target value for the undetected bit error ratio in the delivered SDUs. If no error detection is requested, Residual bit error ratio indicates the bit error ratio in the delivered SDUs. The value is specified as "mEe". As an example a target residual bit error ratio of $5*10^{-3}$ would be specified as "5E3" (e.g. AT+CGEQMIN=...,"5E3",...).

[“0E0“]	subscribed value
“5E2“	
“1E2“	
“5E3“	
“4E3“	
“1E3“	
“1E4“	
“1E5“	
“1E6“	
“6E8“	

<Delivery of erroneous SDUs>(num)(NV)

This parameter indicates whether SDUs detected as erroneous shall be delivered or not.

[0]	no
1	yes
2	no detect

<Transfer delay>(num)(NV)

This parameter indicates the targeted time between request to transfer an SDU at one SAP to its delivery at the other SAP, in milliseconds.

[0]	subscribed value
10...150	(value needs to be divisible by 10 without remainder)
200...950	(value needs to be divisible by 50 without remainder)
1000...4000	(value needs to be divisible by 100 without remainder)

<Traffic handling priority>(num)(NV)

This parameter specifies the relative importance for handling of all SDUs belonging to the UMTS bearer compared to the SDUs of the other bearers.

[0]	subscribed
1	
2	
3	

<Source Statistics Descriptor>(num)(NV)

Numeric parameter that specifies characteristics of the source of the submitted SDUs for a PDP context. This parameter should be provided if the Traffic class is specified as conversational or streaming.

[0]	Characteristics of SDUs is unknown
1	Characteristics of SDUs corresponds to a speech source

<Signaling Indication>(num)(NV)

Numeric parameter that indicates signalling content of submitted SDUs for a PDP context. This parameter should be provided if the Traffic class is specified as interactive

[0]	PDP context is not optimized for signalling
1	PDP context is optimized for signalling

<PDP_type>(str)

Packet Data Protocol Type

“IP“

Note

- If QOS settings are configured with AT+CGQMIN and AT+CGEQMIN in parallel the MT will use only the AT+CGEQMIN settings for connection setup while the AT+CGQMIN settings are ignored.

11.9 AT+CGEQREQ Rel. 99 Quality of Service Profile (Requested)

The AT+CGEQREQ write command allows the TE to specify a Quality of Service Profile for the context identified by the (local) context identification parameter <cid> which is used when the MT sends an Activate PDP Context Request message to the network.
A special form of the write command, AT+CGEQREQ=<cid> causes the requested profile for context number <cid> to become undefined.

The AT+CGEQREQ read command returns the current settings for each defined context.

The AT+CGEQREQ test command returns values supported as a compound value. Definitions of parameters can be found in 3GPP TS 24.008 [39], subclause 10.5.5.6 and 3GPP TS 23.107 [37].

Syntax

Test Command

AT+CGEQREQ=?

Response(s)

+CGEQREQ: <PDP_type>, (list of supported <Traffic class>s), (list of supported <Maximum bitrate UL>s), (list of supported <Maximum bitrate DL>s), (list of supported <Guaranteed bitrate UL>s), (list of supported <Guaranteed bitrate DL>s), (list of supported <Delivery order>s), (list of supported <Maximum SDU size>s), (list of supported <SDU error ratio>s), (list of supported <Residual bit error ratio>s), (list of supported <Delivery of erroneous SDUs>s), (list of supported <Transfer delay>s), (list of supported <Traffic handling priority>s), <Source Statistics Descriptor>, <Signaling Indication>
OK

Read Command

AT+CGEQREQ?

Response(s)

[+CGEQREQ: <cid>, <Traffic class>, <Maximum bitrate UL>, <Maximum bitrate DL>, <Guaranteed bitrate UL>, <Guaranteed bitrate DL>, <Delivery order>, <Maximum SDU size>, <SDU error ratio>, <Residual bit error ratio>, <Delivery of erroneous SDUs>, <Transfer delay>, <Traffic handling priority>, <Source Statistics Descriptor>, <Signaling Indication>]
[+CGEQREQ: ...]

Write Command

AT+CGEQREQ=[<cid>[, <Traffic class>[, <Maximum bitrate UL>[, <Maximum bitrate DL>[, <Guaranteed bitrate UL>[, <Guaranteed bitrate DL>[, <Delivery order>[, <Maximum SDU size>[, <SDU error ratio>[, <Residual bit error ratio>[, <Delivery of erroneous SDUs>[, <Transfer delay>[, <Traffic handling priority>[, <Source Statistics Descriptor>[, <Signaling Indication>]]]]]]]]]]]]]]]

Response(s)

OK
ERROR
+CME ERROR: <err>

PIN	✈	Last
+	+	-

Reference(s)

3GPP TS 27.007 [44]

Parameter Description

<cid>(num)(NV)

Parameter specifies a particular PDP context definition (see AT+CGDCONT parameter <cid>). The parameter is used in other PDP context-related commands.

<Traffic class>(num)(NV)

0	conversational
1	streaming
2	interactive
3	background
[4]	subscribed value

<Maximum bitrate UL>(num)(NV)

This parameter indicates the maximum number of kbits/s delivered to UMTS (up-link traffic) at a SAP. As an example a bitrate of 32kbit/s would be specified as 32 (e.g. AT+CGEQREQ=...,32,...).

[0]	subscribed value
1...63	
64...568	(value needs to be divisible by 8 without remainder)
576...8640	(value needs to be divisible by 64 without remainder)
8700...16000	(value needs to be divisible by 100 without remainder)

<Maximum bitrate DL>(num)(NV)

This parameter indicates the maximum number of kbits/s delivered by UMTS (down-link traffic) at a SAP. As an example a bitrate of 32kbit/s would be specified as 32 (e.g. AT+CGEQREQ=...,32,...).

[0]	subscribed value
1...63	
64...568	(value needs to be divisible by 8 without remainder)
576...8640	(value needs to be divisible by 64 without remainder)
8700...16000	(value needs to be divisible by 100 without remainder)

<Guaranteed bitrate UL>(num)(NV)

This parameter indicates the guaranteed number of kbits/s delivered to UMTS (up-link traffic) at a SAP (provided that there is data to deliver). As an example a bitrate of 32kbit/s would be specified as 32 (e.g. AT+CGEQREQ=...,32,...).

[0]	subscribed value
1...63	
64...568	(value needs to be divisible by 8 without remainder)
576...8640	(value needs to be divisible by 64 without remainder)

<Guaranteed bitrate DL>(num)(NV)

This parameter indicates the guaranteed number of kbits/s delivered by UMTS (down-link traffic) at a SAP (provided that there is data to deliver). As an example a bitrate of 32kbit/s would be specified as 32 (e.g. AT+CGEQREQ=...,32,...).

[0]	subscribed value
1...63	
64...568	(value needs to be divisible by 8 without remainder)
576...8640	(value needs to be divisible by 64 without remainder)

<Delivery order>(num)(NV)

This parameter indicates whether the UMTS bearer shall provide in-sequence SDU delivery or not.

[0]	no
1	yes
2	subscribed value

<Maximum SDU size>(num)(NV)

This parameter indicates the maximum allowed SDU size in octets.

[0]	
10...1500	(value needs to be divisible by 10 without remainder)
1502	
1510	
1520	

<SDU error ratio>(str)(NV)

This parameter indicates the target value for the fraction of SDUs lost or detected as erroneous. SDU error ratio is defined only for conforming traffic. The value is specified as "mEe". As an example a target SDU error ratio of $5*10^{-3}$ would be specified as "5E3" (e.g. AT+CGEQREQ=...,"5E3",...).

[“0E0“]	subscribed value
“1E2“	
“7E3“	
“1E3“	
“1E4“	
“1E5“	
“1E6“	
“1E1“	

<Residual bit error ratio>(str)(NV)

This parameter indicates the target value for the undetected bit error ratio in the delivered SDUs. If no error detection is requested, Residual bit error ratio indicates the bit error ratio in the delivered SDUs. The value is specified as "mEe". As an example a target residual bit error ratio of $5*10^{-3}$ would be specified as "5E3" (e.g. AT+CGEQREQ=...,"5E3",...).

[“0E0“]	subscribed value
“5E2“	
“1E2“	
“5E3“	
“4E3“	
“1E3“	
“1E4“	
“1E5“	
“1E6“	
“6E8“	

<Delivery of erroneous SDUs>(num)(NV)

This parameter indicates whether SDUs detected as erroneous shall be delivered or not.

0	no
1	yes
2	no detect
[3]	subscribed value

<Transfer delay>(num)(NV)

This parameter indicates the targeted time between request to transfer an SDU at one SAP to its delivery at the other SAP, in milliseconds.

[0]	subscribed value
10...150	(value needs to be divisible by 10 without remainder)
200...950	(value needs to be divisible by 50 without remainder)
1000...4000	(value needs to be divisible by 100 without remainder)

<Traffic handling priority>(num)(NV)

This parameter specifies the relative importance for handling of all SDUs belonging to the UMTS bearer compared to the SDUs of the other bearers.

[0]	subscribed
1	
2	
3	

<Source Statistics Descriptor>(num)(NV)

Numeric parameter that specifies characteristics of the source of the submitted SDUs for a PDP context. This parameter should be provided if the Traffic class is specified as conversational or streaming.

[0]	Characteristics of SDUs is unknown
1	Characteristics of SDUs corresponds to a speech source

<Signaling Indication>(num)(NV)

Numeric parameter that indicates signalling content of submitted SDUs for a PDP context. This parameter should be provided if the Traffic class is specified as interactive

[0]	PDP context is not optimized for signalling
1	PDP context is optimized for signalling

<PDP_type>(str)

Packet Data Protocol Type

“IP“

Note

- If QOS settings are configured with AT+CGQREQ and AT+CGEQREQ in parallel the MT will use only the AT+CGEQREQ settings for connection setup while the AT+CGQREQ settings are ignored.

11.10 AT+CGEREP GPRS event reporting

The AT+CGEREP write command enables or disables sending of unsolicited result codes, "+CGEV" from MT to TE in the case of certain events occurring in the Packet Domain MT or the network.
Parameter <mode> controls the processing of unsolicited result codes specified within this command. <bfr> controls the effect on buffered codes when <mode> 1 or 2 is entered. If a setting is not supported by the MT, ERROR or +CME ERROR: is returned.

The AT+CGEREP read command returns the current <mode> and buffer settings.

The AT+CGEREP test command returns the modes and buffer settings supported by the MT as compound values.

Syntax

Test Command

```
AT+CGEREP=?
```

Response(s)

```
+CGEREP: (list of supported <mode>s), (list of supported <bfr>s)
OK
```

Read Command

```
AT+CGEREP?
```

Response(s)

```
+CGEREP: <mode>, <bfr>
OK
```

Write Command

```
AT+CGEREP=[<mode>[, <bfr>]]
```

Response(s)

```
OK
ERROR
+CME ERROR: <err>
```

PIN	✈	Last
+	+	-

Reference(s)

3GPP TS 27.007 [44]

Unsolicited Result Codes

URC 1

```
+CGEV: NW DEACT <PDP_type>, <PDP_addr>, [<cid>]
```

The network has forced a context deactivation. The <cid> that was used to activate the context is provided if known to the MT.

URC 2

```
+CGEV: ME DEACT <PDP_type>, <PDP_addr>, [<cid>]
```

The ME has forced a context deactivation. The <cid> that was used to activate the context is provided if known to the MT.

URC 3

```
+CGEV: NW DETACH
```

The network has forced a PS detach. This implies that all active contexts have been deactivated. These are not reported separately.

URC 4

+CGEV: ME DETACH

The mobile equipment has forced a GPRS detach. This implies that all active contexts have been deactivated. These are not reported separately.

URC 5

+CGEV: NW CLASS <class>

The network has forced a change of MS class. The highest available class is reported.

URC 6

+CGEV: ME CLASS <class>

The ME has forced a change of MS class. The highest available class is reported.

URC 7

+CGEV: ME PDN ACT <cid>

The ME has activated a context. The context represents a Primary PDP context in GSM/UMTS. The <cid> for this context is provided to the TE. This event is sent either in result of explicit context activation request (AT+CGACT), or in result of implicit context activation request associated to attach request (AT+CGATT=1).

Parameter Description

<mode>(num)	
0(P)	Buffer unsolicited result codes in the MT. If MT result code buffer is full, the oldest ones will be discarded. No codes are forwarded to the TE.
1	Discard unsolicited result codes when MT TE link is reserved (e.g. in on line data mode); otherwise forward them directly to the TE.
2	Buffer unsolicited result codes in the MT when MT TE link is reserved (e.g. in on line data mode) and flush them to the TE when MT TE link becomes available; otherwise forward them directly to the TE. If MT result code buffer is full, the oldest URCs will be discarded.

<bfr>(num)	
0	MT buffer of unsolicited result codes defined within this command is cleared when <mode> 1 or 2 is entered
1	MT buffer of unsolicited result codes defined within this command is flushed to the TE when <mode> 1 or 2 is entered (OK response will be given before flushing the codes). Buffer is empty afterwards.

<class>(str)	
Parameter indicates the GPRS mobile class.	
“B“	Class B

11.11 AT+CGPADDR Show PDP address

The AT+CGPADDR exec command returns a list of PDP addresses for all defined contexts.
The AT+CGPADDR write command returns a list of PDP addresses for the specified context identifiers. If a context is not defined, then no output line is generated for it. If no <cid> is specified, the addresses for all defined contexts are returned.

The AT+CGPADDR test command returns a list of defined <cid>s.

Syntax

Test Command

```
AT+CGPADDR=?
```

Response(s)

```
[+CGPADDR: (list of defined <cid>s)]
OK
```

Exec Command

```
AT+CGPADDR
```

Response(s)

```
[+CGPADDR: <cid>, <PDP_address>]
[+CGPADDR: ...]
OK
ERROR
+CME ERROR: <err>
```

Write Command

```
AT+CGPADDR=[<cid>[,<cid>]]
```

Response(s)

```
[+CGPADDR: <cid>, <PDP_address>]
[+CGPADDR: <cid>, <PDP_address>]
OK
ERROR
+CME ERROR: <err>
```

PIN	✈	Last
+	+	-

Reference(s)

3GPP TS 27.007 [44]

Parameter Description

<cid>(num)

A numeric parameter which specifies a particular PDP context definition (see AT+CGDCONT command).

<PDP_address>(str)

A string that identifies the MT in the address space applicable to the PDP. The address may be static or dynamic. For a static address, it will be the one set by AT+CGDCONT when the context was defined. For a dynamic address it will be the one assigned during the last PDP context activation that used the context definition referred to by <cid>.

11.12 AT+CGQMIN Quality of Service Profile (Minimum acceptable)

This AT+CGQMIN command allows the TE to specify a minimum acceptable profile which is checked by the MT against the negotiated profile returned in the Activate PDP Context Accept message.

The AT+CGQMIN write command specifies a profile for the context identified by the (local) context identification parameter, <cid>.
A special form of the write command, AT+CGQMIN= <cid> causes the minimum acceptable profile for context number <cid> to become undefined. In this case no check is made against the negotiated profile.

The AT+CGQMIN test command returns values supported as a compound value. If the MT supports several PDP types, the parameter value ranges for each PDP type are returned on a separate line.

The AT+CGQMIN read command returns the current settings for each defined context. If no minimum profile was explicitly specified for a context, simply OK will be returned, but default values will be used for that context.

Syntax

Test Command

```
AT+CGQMIN=?
```

Response(s)

```
+CGQMIN: <PDP_type>, (list of supported <precedence>s), (list of supported <delay>s), (list of supported <reliability>s), (list of supported <peak>s), (list of supported <mean>s)
OK
ERROR
+CME ERROR: <err>
```

Read Command

```
AT+CGQMIN?
```

Response(s)

```
[+CGQMIN: <cid>, <precedence>, <delay>, <reliability>, <peak>, <mean>]
[+CGQMIN: ...]
OK
ERROR
+CME ERROR: <err>
```

Write Command

```
AT+CGQMIN=[<cid>[, <precedence>[, <delay>[, <reliability>[, <peak>[, <mean>]]]]]]
```

Response(s)

```
OK
ERROR
+CME ERROR: <err>
```

PIN	✈	Last
+	+	-

Reference(s)

3GPP TS 27.007 [44]

Parameter Description

<cid>(num)(NV)

Parameter specifies a particular PDP context definition (see AT+CGDCONT parameter <cid>). The parameter is used in other PDP context-related commands.

<precedence>(num)(NV)

Precedence class

[0]	network subscribed value

1	High Priority Service commitments shall be maintained ahead of precedence classes 2 and 3
2	Normal priority Service commitments shall be maintained ahead of precedence class 3
3	Low priority Service commitments shall be maintained

`<delay>`(num)(NV)

Delay class

The delay parameter defines the end-to-end transfer delay incurred in the transmission of SDUs through the GPRS network(s).

[0]	network subscribed value
1..4	SDU size: 128 octets:

Delay Class	Mean Transfer Delay	95 percentile
1 (Predictive)	<0.5	<1.5
2 (Predictive)	<5	<25
3 (Predictive)	<50	<250
4 (Best Effort)	Unspecified	

SDU size: 1024 octets:

Delay Class	Mean Transfer Delay	95 percentile
1 (Predictive)	<0.5	<1.5
2 (Predictive)	<5	<25
3 (Predictive)	<50	<250
4 (Best Effort)	Unspecified	

`<reliability>`(num)(NV)

Reliability class

[0]	network subscribed value
1	Reliability class 1 was removed in 3GPP TS 23.107 [37] v6.1.0, and is automatically mapped to reliability class 2.
2	Non real-time traffic, error-sensitive application that can cope with infrequent data loss
3	Non real-time traffic, error-sensitive application that can cope with data loss, GMM/SM, and SMS
4	Real-time traffic, error-sensitive application that can cope with data loss
5	Real-time traffic, error non-sensitive application that can cope with data loss

`<peak>`(num)(NV)

Peak throughput class (in octets per second).

[0]	network subscribed value
1	Up to 1 000 (8 kbit/s).
2	Up to 2 000 (16 kbit/s).
3	Up to 4 000 (32 kbit/s).

4	Up to 8 000 (64 kbit/s).
5	Up to 16 000 (128 kbit/s).
6	Up to 32 000 (256 kbit/s).
7	Up to 64 000 (512 kbit/s).
8	Up to 128 000 (1024 kbit/s).
9	Up to 256 000 (2048 kbit/s).

`<mean>`(num)(NV)

Mean throughput class(in octets per hour).

[0]	network subscribed value
1	100 (~0.22 bit/s)
2	200 (~0.44 bit/s)
3	500 (~1.11 bit/s)
4	1 000 (~2.2 bit/s)
5	2 000 (~4.4 bit/s)
6	5 000 (~11.1 bit/s)
7	10 000 (~22 bit/s)
8	20 000 (~44 bit/s)
9	50 000 (~111 bit/s)
10	100 000 (~0.22 kbit/s)
11	200 000(~0.44 kbit/s)
12	500 000(~1.11 kbit/s)
13	1 000 000 (~2.2 kbit/s)
14	2 000 000 (~4.4 kbit/s)
15	5 000 000 (~11.1 kbit/s)
16	10 000 000 (~22 kbit/s)
17	20 000 000 (~44 kbit/s)
18	50 000 000 (~111 kbit/s)
31	best effort

`<PDP_type>`(str)

Packet Data Protocol Type

“IP“

Notes

- If parameters are not defined, the parameter default values depend on the HLR-stored subscribed default values.
- Definitions of parameters can be found in 3GPP TS 22.060 [26] and 3GPP TS 23.060 [27] paragraph 15.2 "Quality of Service Profile".
- If some of the QoS parameters are omitted, they will keep their current value (or the default value if not specified so far).
- If QOS settings are configured with `AT+CGQMIN` and `AT+CGEQMIN` in parallel the MT will use only the `AT+CGEQMIN` settings for connection setup while the `AT+CGQMIN` settings are ignored.

11.13 AT+CGQREQ Quality of Service Profile (Requested)

The AT+CGQREQ command allows the TE to specify a Quality of Service Profile that is used when the MT sends an Activate PDP Context Request message to the network.
The AT+CGQREQ write command specifies a profile for the context identified by the (local) context identification parameter, <cid>.
A special form of the write command, +CGQREQ=<cid> causes the requested profile for context number <cid> to become undefined.

The AT+CGQREQ test command returns values supported as a compound value. If the MT supports several PDP types, the parameter value ranges for each PDP type are returned on a separate line.

The AT+CGQREQ read command returns the current settings for each defined context. If no requested profile was explicitly specified for a context, simply OK will be returned, but default values will be used for that context.

Syntax

Test Command

AT+CGQREQ=?

Response(s)

+CGQREQ: <PDP_type>, (list of supported <precedence>s), (list of supported <delay>s), (list of supported <reliability>s), (list of supported <peak>s), (list of supported <mean>s)
OK

Read Command

AT+CGQREQ?

Response(s)

[+CGQREQ: <cid>, <precedence>, <delay>, <reliability>, <peak>, <mean>]
[+CGQREQ: ...]

Write Command

AT+CGQREQ=[<cid>[, <precedence>[, <delay>[, <reliability>[, <peak>[, <mean>]]]]]]

Response(s)

OK
ERROR
+CME ERROR: <err>

PIN	✈	Last
+	+	-

Reference(s)

3GPP TS 27.007 [44]

Parameter Description

<cid>(num)(NV)

Parameter specifies a particular PDP context definition (see AT+CGDCONT parameter <cid>). The parameter is used in other PDP context-related commands.

<precedence>(num)(NV)

Precedence class

[0]	network subscribed value
1	High Priority Service commitments shall be maintained ahead of precedence classes 2 and 3

2	Normal priority Service commitments shall be maintained ahead of precedence class 3
3	Low priority Service commitments shall be maintained

`<delay>`(num)(NV)

Delay class

This parameter defines the end-to-end transfer delay incurred in the transmission of SDUs through the GPRS network(s).

[0] network subscribed value

1..4 with SDU size = 128 octets:

Delay Class	Mean Transfer Delay	95 percentile
1 (Predictive)	<0.5	<1.5
2 (Predictive)	<5	<25
3 (Predictive)	<50	<250
4 (Best Effort)	Unspecified	-

with SDU size = 1024 octets:

Delay Class	Mean Transfer Delay	95 percentile
1 (Predictive)	<0.5	<1.5
2 (Predictive)	<5	<25
3 (Predictive)	<50	<250
4 (Best Effort)	Unspecified	-

`<reliability>`(num)(NV)

Reliability class

[0]	network subscribed value
1	Reliability class 1 was removed in 3GPP TS 23.107 [37] v6.1.0, and is automatically mapped to reliability class 2.
2	Non real-time traffic, error-sensitive application that can cope with infrequent data loss
3	Non real-time traffic, error-sensitive application that can cope with data loss, GMM/SM, and SMS
4	Real-time traffic, error-sensitive application that can cope with data loss
5	Real-time traffic, error non-sensitive application that can cope with data loss

`<peak>`(num)(NV)

Peak throughput class

in octets per second

[0]	network subscribed value
1	Up to 1 000 (8 kbit/s)
2	Up to 2 000 (16 kbit/s)
3	Up to 4 000 (32 kbit/s)
4	Up to 8 000 (64 kbit/s)
5	Up to 16 000 (128 kbit/s)

6	Up to 32 000 (256 kbit/s)
7	Up to 64 000 (512 kbit/s)
8	Up to 128 000 (1024 kbit/s)
9	Up to 256 000 (2048 kbit/s)

<mean>(num)(NV)

Mean throughput class
in octets per hour

[0]	network subscribed value
1	100 (~0.22 bit/s)
2	200 (~0.44 bit/s)
3	500 (~1.11 bit/s)
4	1 000 (~2.2 bit/s)
5	2 000 (~4.4 bit/s)
6	5 000 (~11.1 bit/s)
7	10 000 (~22 bit/s)
8	20 000 (~44 bit/s)
9	50 000 (~111 bit/s)
10	100 000 (~0.22 kbit/s)
11	200 000(~0.44 kbit/s)
12	500 000(~1.11 kbit/s)
13	1 000 000 (~2.2 kbit/s)
14	2 000 000 (~4.4 kbit/s)
15	5 000 000 (~11.1 kbit/s)
16	10 000 000 (~22 kbit/s)
17	20 000 000 (~44 kbit/s)
18	50 000 000 (~111 kbit/s)
31	best effort

<PDP_type>(str)

Packet Data Protocol type
“IP“

Notes

- If parameters are not defined, the parameter default values depend on the HLR-stored subscribed default values.
- Definitions of parameters can be found in 3GPP TS 22.060 [26] and 3GPP TS 23.060 [27] paragraph 15.2 "Quality of Service Profile".
- If some of the QoS parameters are omitted, they will keep their current value (or the default value if not specified so far).
- If QOS settings are configured with AT+CGQREQ and AT+CGEQREQ in parallel the MT will use only the AT+CGEQREQ settings for connection setup while the AT+CGQREQ settings are ignored.

11.14 AT+CGREG Packet Domain Network Registration Status

AT+CGREG write command enables presentation of URC "+CGREG: <stat>" when <n>=1 and ME's Packet Domain network registration status changes, or URC "+CGREG: <stat>[, <lac>, <ci>][, <AcT>, <rac>]" when <n>=2 and the current network cell changes.
AT+CGREG read command queries the current URC presentation status and <stat> which shows whether the network has currently indicated the registration of the ME. Location information elements <lac> and <ci> are returned only if <n>=2 and ME is registered to the network.

Syntax

Test Command

```
AT+CGREG=?
```

Response(s)

```
+CGREG: (list of supported <n>s)
OK
```

Read Command

```
AT+CGREG?
```

Response(s)

```
+CGREG: <n>, <stat>[, <lac>, <ci>][, <AcT>, <rac>]
OK
```

Write Command

```
AT+CGREG=[<n>]
```

Response(s)

```
OK
ERROR
+CME ERROR: <err>
```

PIN	✈	Last
+	+	-

Reference(s)

3GPP TS 27.007 [44]

Unsolicited Result Codes

URC 1

```
+CGREG: <stat>
```

Indicates a change in the ME's Packet Domain network registration status.

URC 2

```
+CGREG: <stat>[, <lac>, <ci>][, <AcT>, <rac>]
```

Indicates a change in the ME's Packet Domain network registration status or a change of the network cell including location information.

Parameter Description

<n>(num)	
0(P)	Disable network registration unsolicited result code
1	Enable network registration URC "+CGREG: <stat>"
2	Enable network registration URC "+CGREG: <stat>[, <lac>, <ci>][, <AcT>, <rac>]"

<stat>(num)	
0	Not registered, ME is not currently searching an operator to register to. The ME is in GMM state GMM-NULL or GMM-DEREGISTERED-INITIATED. Packet Domain service is disabled, the ME is allowed to attach to GPRS if requested by the user.
1	Registered, home network. The ME is in GMM state GMM-REGISTERED or GMM-ROUTING-AREA-UPDATING-INITIATED INITIATED on the home PLMN
2	Not registered, but ME is currently trying to attach or searching an operator to register to. The ME is in GMM state GMM-DEREGISTERED or GMM-REGISTERED-INITIATED. The Packet Domain service is enabled, but an allowable PLMN is currently not available. The ME will start a Packet Domain attach as soon as an allowable PLMN is available.
3	Registration denied. The ME is in GMM state GMM-NULL. The Packet Domain service is disabled, the ME is not allowed to attach to Packet Domain if requested by the user.
4	Unknown
5	Registered, roaming. The ME is in GMM state GMM-REGISTERED or GMM-ROUTING-AREA-UPDATING-INITIATED on a visited PLMN.

<lac>(str)

Two byte location area code in hexadecimal format.

<ci>(str)

Four byte cell ID in hexadecimal format.

<AcT>(str)

Radio access technology

“0“	GSM
“2“	UTRAN
“3“	GSM w/EGPRS
“4“	UTRAN w/HSDPA
“5“	UTRAN w/HSUPA
“6“	UTRAN w/HSDPA and w/HSUPA

<rac>(str)

One-byte routing area code in hexadecimal format

11.15 AT+CGSMS Select service for MO SMS messages

AT+CGSMS specifies the service or service preference that the MT will use to send MO (mobile originated) short messages. If parameter <service> is not given, the current value remains unchanged.

Syntax

Test Command

AT+CGSMS=?

Response(s)

+CGSMS: (list of supported <service>s)
OK

Read Command

AT+CGSMS?

Response(s)

+CGSMS: <service>
OK

Write Command

AT+CGSMS=[<service>]

Response(s)

OK
ERROR
+CME ERROR: <err>

PIN	✈	Last
+	+	-

Reference(s)

3GPP TS 27.007 [44]

Parameter Description

<service>(num)

A numeric parameter which indicates the service or service preference to be used. Parameter is global for all interfaces and volatile.

0	Packet Domain
1(P)	Circuit switched
2	Packet Domain preferred (use circuit switched SMS transfer if mobile is not PS attached)
3	Circuit switched preferred (use Packet Domain if circuit switched is not available)

Note

- Sending SMS via Packet Domain is only possible when mobile is attached using AT+CGATT.

11.16 ATA Manual acceptance of a network request for PDP context activation

The V.250 ATA command may be used to accept a network request for a PDP context activation announced by the unsolicited result codes "RING" or "+CRING: GPRS". EHS6-A responds with CONNECT, enters V.250 online data state and follows the same procedure as it would after having received a AT+CGANS=1 with no <L2P> or <cid> values specified.
If you try to answer a request which is no longer present or which is already answered by another instance, NO CARRIER is returned.

Syntax

Exec Command
ATA
Response(s)
CONNECT NO CARRIER

PIN	✈	Last
+	-	+

Reference(s)
3GPP TS 27.007 [44]

11.17 ATD*99# Request Packet Domain Service

ATD*99# causes the MT to perform whatever actions are necessary to establish a communication between the TE and the external PDN.
The V.250 'D' (Dial) command causes the MT to enter the V.250 online data state and, with the TE, to start the specified layer 2 protocol. No further commands may follow on the AT command line. Packet Domain attachment and PDP context activation procedures may take place prior to or during the PDP startup if they have not already been performed using the AT+CGATT and AT+CGACT commands. If the context to be used is already activated, it will be deactivated first. This ensures that the right context parameters will be used (e.g. QoS changes since the last context activation or the called address specified by ATD*99#). To confirm acceptance of the command before entering the V.250 online data state command will respond with CONNECT.
When the layer 2 protocol has terminated, either as a result of an orderly shutdown of the PDP or an error, the MT enters V.250 command state and returns NO CARRIER (for details refer to Section 11.5.1, Automatic deactivation of PDP context during dial-up PPP).
ATD*99# is blocked when the Fixed Dialing lock is enabled and the number "*99#" is not present in the "FD" phonebook (see AT+CLCK SIM Fixed Dialing lock). In this case "+CME ERROR: call barred" is returned.

Syntax

Exec Command

```
ATD*99[* [<called_address>][* [<L2P>][* [<cid>]]]]#
```

Response(s)

```
CONNECT
NO CARRIER
ERROR
+CME ERROR: <err>
```

PIN	✈	Last
+	-	+

Reference(s)

3GPP TS 27.007 [44]

Parameter Description

<called_address>(str)

IP V4 address in the form w.x.y.z, which identifies the called party; if it is provided, the MT will automatically set up a virtual call to the specified address after the context has been activated. This parameter is currently not used and needs not to be specified.

<L2P>(str)

Layer 2 protocol to be used between the TE and MT.

["PPP"]	Layer 2 protocol PPP
"1"	Layer 2 protocol PPP

<cid>(num)

Parameter specifies a particular PDP context definition (see AT+CGDCONT command). If no context is specified, an internal context with default properties is used (see AT+CGDCONT, AT+CGQREQ and AT+CGQMIN).

Notes

- If EHS6-A is in dedicated mode, command returns "+CME ERROR: phone busy".
- ATD is used as a standard V.250 AT command, too.

11.18 AT^SGAUTH Set Type of Authentication for PDP-IP Connections

The AT^SGAUTH write command allows to enter the type of authentication for the specified PDP context.
The AT^SGAUTH read command returns the current settings for each defined PDP context. If no PDP context is defined the read command returns only OK result code.

Syntax

Test Command

AT^SGAUTH=?

Response(s)

^SGAUTH: (range of supported <cid>s), (list of supported <auth_type>s), (max. string length of <user>), (max. string length of <passwd>)
OK

Read Command

AT^SGAUTH?

Response(s)

^SGAUTH: <cid>, <auth_type>[, <user>]
^SGAUTH: <cid>, <auth_type>[, <user>]
...
OK
ERROR
+CME ERROR: <err>

Write Command

AT^SGAUTH=<cid>, <auth_type>, <user>, <passwd>

Response(s)

OK
+CME ERROR: <err>

PIN	✈	Last
-	+	-

Parameter Description

<cid>(num)(NV)

Parameter specifies a particular PDP context definition (see AT+CGDCONT parameter <cid>).

<auth_type>(num)(NV)

Types of authentication to be used for the specified context.

[0]	none
1	PAP
2	CHAP

<passwd>(str)(NV)

Parameter specifies the password used for authentication.
Parameter is mandatory even if not needed by network. If no password is available the parameter shall be given in the format "". This applies also when <auth_type> equals "0" (none).

<user>(str)(NV)

Parameter specifies the user name used for authentication.
Parameter is mandatory even if not needed by network. If no user name is available the parameter shall be given in the format "". This applies also when <auth_type> equals "0" (none).

11.19 AT^SGCONF Configuration of GPRS related Parameters

AT^SGCONF configures the used E/GPRS Multislot Classes. Four Multislot Classes are supported for GPRS respectively EGPRS.

Syntax

Test Command

AT^SGCONF=?

Response(s)

^SGCONF: (list of supported <llc_pdu_length_U>s), (list of supported <llc_pdu_length_I>s), (list of supported <GPRS msclass>es), (list of supported <EGPRS msclass>es), (list of supported <msClassChangeMode>s)
OK

Read Command

AT^SGCONF?

Response(s)

^SGCONF: <llc_pdu_length_U>, <llc_pdu_length_I>, <GPRS msclass>, <EGPRS msclass>, <msClassChangeMode>
OK

Write Command

AT^SGCONF=[<llc_pdu_length_U>][, [<llc_pdu_length_I>][, [<GPRS msclass>][, [<EGPRS msclass>][, <msClassChangeMode>]]]]

Response(s)

OK
ERROR
+CME ERROR: <err>

PIN ✈ Last
- + -

Parameter Description

<llc_pdu_length_U>(num)

The maximum number of octets in an information field of Unnumbered (U) frames.

0(P)	No negotiation with network (A fixed number of octets will be used).

<llc_pdu_length_I>(num)

The maximum number of octets in an information field of Combined Information (I) frames.

0(P)	No negotiation with network (A fixed number of octets will be used).

<GPRS msclass>(num)

GPRS Multislot Class. The value can be one of the classes indicated with the Test command.

8	GPRS Multislot Class 8
10	GPRS Multislot Class 10
11	GPRS Multislot Class 11
12(D)	GPRS Multislot Class 12

<EGPRS msclass>(num)	
EGPRS Multislot Class. The value can be one of the classes indicated with the Test command.	
8	EGPRS Multislot Class 8
10	EGPRS Multislot Class 10
11	EGPRS Multislot Class 11
12(D)	EGPRS Multislot Class 12

<msClassChangeMode>(num)	
1	Changed Multislot Class settings will be applied immediately. This is supported only, if ME is not in state PS registered (see AT+CGREG).

12. Short Message Service (SMS) Commands

The AT Commands described in this chapter allow an external application to use the Short Message Service with the EHS6-A.

12.1 SMS Parameters

Parameter Description

<ackpdu>(num)

Format is same for <pdu> in case of SMS, but without 3GPP TS 24.011 [38] SC address field and parameter shall be bounded by double quote characters like a normal string type parameter

<alpha>(str)(+CSCS)

String type alphanumeric representation of <da> or <oa> corresponding to the entry found in phonebook. This feature is not supported.

<cdata>(num)

Command Data

3GPP TS 23.040 [35] TP-Command-Data in text mode responses; ME converts each 8-bit octet into two IRA character long hexadecimal numbers, e.g. octet with integer value 42 is represented as two characters "2A", IRA 50 and 65 (decimal).

<ct>(num)

Command Type

3GPP TS 23.040 [35] TP-Command-Type in integer format

0...255

<da>(str)(+CSCS)

Destination Address

3GPP TS 23.040 [35] TP- Destination-Address Address-Value field in string format; BCD numbers (or GSM default alphabet characters) are converted into characters; type of address given by <toda>

<data>(num)(+CSCS)

User Data

In case of SMS: 3GPP TS 23.040 [35] TP-User-Data in text mode responses; format:

- If <dcs> indicates that 3GPP TS 23.038 [34] GSM 7 bit default alphabet is used and <fo> indicates that 3GPP TS 23.040 [35] TP-User-Data-Header-Indication is not set: ME converts GSM alphabet into current TE character set according to rules covered in Annex A.
- If <dcs> indicates that 8-bit or UCS2 data coding scheme is used, or <fo> indicates that 3GPP TS 23.040 [35] TP-User-Data-Header-Indication is set: ME converts each 8-bit octet into hexadecimal numbers con-taining two IRA characters, e.g. octet with integer value 42 is represented as two characters "2A", IRA 50 and 65 (decimal).

In case of CBS: 3GPP TS 23.041 [36] CBM Content of Message in text mode responses; format:

- If <dcs> indicates that 3GPP TS 23.038 [34] GSM 7 bit default alphabet is used: ME converts GSM alphabet into current TE character set according to rules covered in Annex A.
- If <dcs> indicates that 8-bit or UCS2 data coding scheme is used: ME converts each 8-bit octet into hexa-decimal numbers containing two IRA characters.

<dt>(num)

Discharge Time

3GPP TS 23.040 [35] TP-Discharge-Time in time-string format: "yy/MM/dd,hh:mm:ss+zz", where characters indicate year (two last digits), month, day, hour, minutes, seconds and time zone. For example, 6th of May 1994, 22:10:00 GMT+2 hours equals "94/05/06,22:10:00+08"

<index>(num)

Integer type; value in the range of location numbers supported by the associated memory

<length>(num)

Message Length

Integer type value indicating in the text mode (AT+CMGF=1) the length of the message body <data> (or <cdata>) in characters; or in PDU mode (AT+CMGF=0), the length of the actual TP data unit in octets (i.e. the RP layer SMSC address octets are not counted in the length) In text mode, the maximum length of an SMS depends on the used coding scheme: It is 160 characters if the 7 bit GSM coding scheme is used, and 140 characters according to the 8 bit GSM coding scheme.
If the SMS message format is "text mode" (AT+CMGF=1) and the character set is set to "UCS2" with AT+CSCS and the SMS is also coded as "UCS2" (see <dcs> of AT+CSMP), then the length is in octets instead of characters.

<mem1>(str)

Memory to be used when listing, reading and deleting messages:

“BM“	Broadcast message storage
“ME“	Mobile Equipment message storage
“SM“(P)	USIM message storage
“SR“	Status report message storage

<mem2>(str)

Memory to be used when writing and sending messages:

“ME“	Mobile Equipment message storage
“SM“(P)	USIM message storage

<mem3>(str)

Received messages will be placed in this memory storage if routing to TE is not set. See command AT+CNMI with parameter <mt>=2. received CBMs are always stored in "BM" unless directly forwarded to TE. Received status reports are always stored in "SR" unless directly forwarded to TE.

“BM“	Broadcast message storage
“ME“	Mobile Equipment message storage
“SM“(P)	USIM message storage
“SR“	Status report message storage

<mid>(num)

Message Identifier

3GPP TS 23.041 [36] CBM Message Identifier in integer format

<mn>(num)

Message Number

3GPP TS 23.040 [35] TP-Message-Number in integer format

<mr>(num)

Message Reference

3GPP TS 23.040 [35] TP-Message-Reference in integer format

<oa>(str)(+CSCS)

Originating Address

3GPP TS 23.040 [35] TP-Originating-Address Address-Value field in string format; BCD numbers (or GSM default alphabet characters) are converted into characters; type of address given by <tooa>

<page>(num)

Page Parameter

3GPP TS 23.041 [36] CBM Page Parameter bits 4-7 in integer format

<pages>(num)

Page Parameter

3GPP TS 23.041 [36] CBM Page Parameter bits 0-3 in integer format

<pdu>(num)

In the case of SMS: 3GPP TS 24.011 [38] SC address followed by 3GPP TS 23.040 [35] TPDU in hexadecimal format: ME converts each octet of TP data unit into hexadecimal numbers containing two IRA characters, e.g. octet with integer value 42 is represented as two characters "2A", IRA 50 and 65 (decimal). In the case of CBS: <ra> 3GPP TS 23.040 [35] TP-Recipient-Address Ad-dress-Value field in string format; BCD numbers (or GSM default alphabet characters) are converted into characters; type of address given by <tora>

<ra>(str)(+CSCS)

Recipient Address

3GPP TS 23.040 [35] TP-Recipient-Address Address-Value field in string format; BCD numbers (or GSM default alphabet characters) are converted to characters of the currently selected TE character set (refer to command AT+CSCS.); type of address given by <tora>

<sca>(str)(+CSCS)

Service Center Address

3GPP TS 24.011 [38] RP SC address Address-Value field in string format; BCD numbers (or GSM default alphabet characters) are converted to characters of the currently selected TE character set (AT+CSCS); type of address given by <tosca>

<scts>(num)

Service Centre Time Stamp

3GPP TS 23.040 [35] TP-Service-Centre-Time-Stamp in time-string format (refer <dt>)

<sn>(num)

Serial Number

3GPP TS 23.041 [36] CBM Serial Number in integer format

<st>(num)

Status

3GPP TS 23.040 [35] TP-Status in integer format

0...255

<stat>(str)

Message status

3GPP TS 27.005 [43] Interface of SMS and CB. Indicates the status of message in memory.

Description	text mode (<mode>=1)	PDU mode (<mode>=0)	Default
Received unread messages	"REC UNREAD"	0	for SMS reading commands
Received read messages	"REC READ"	1	
Stored unsent messages	"STO UNSENT"	2	for SMS writing commands
Stored sent messages	"STO SENT"	3	
All messages	"ALL"	4	

<toda>(num)

Type of Destination Address

3GPP TS 24.011 [38] TP-Destination-Address Type-of-Address octet in integer format (when first character of <da> is + (IRA 43) default is 145, otherwise default is 129)

0...255

<tooa>(num)

Type of Originating Address

3GPP TS 24.011 [38] TP-Originating-Address Type-of-Address octet in integer format (default refer <toda>)

<tora>(num)

Type of Recipient Address

3GPP TS 24.011 [38] TP-Recipient-Address Type-of-Address octet in integer format (default refer <toda>)

<tosca>(num)

Type of Service Center Address

3GPP TS 24.011 [38] RP SC address Type-of-Address octet in integer format (default refer <toda>)

12.2 AT+CMGC Send SMS Command

Syntax

Test Command

AT+CMGC=?

Response(s)

OK

Write Command

If text mode (see AT+CMGF=1)

AT+CMGC=<fo>, <ct>[, <pid>[, <mn>[, <da>[, <toda>]]]]<CR> Text can be entered <CTRL-Z>/<ESC>

Response(s)

+CMGC: <mr>[, <scts>]
If sending fails
ERROR
+CMS ERROR: <err>

Write Command

If PDU mode (see AT+CMGF=0)

AT+CMGC=<length><CR> PDU can be entered <CTRL-Z>/<ESC>

Response(s)

+CMGC: <mr>[, <ackpdu>]
OK
If sending fails
ERROR
+CMS ERROR: <err>

PIN	✈	Last
+	-	-

Reference(s)

3GPP TS 27.005 [43]

Notes

- After invoking the commands AT+CMGW, AT+CMGS or AT+CMGC it is necessary to wait for the prompt ">" before entering text or PDU.
- In general but especially at baudrates below 19200 it is recommended to only use the command line termination character (ATS3) before starting text or PDU input. Use of line termination character followed by an additional response formatting character (ATS4) may cause the problem that the latter will become part of the input data.

12.3 AT+CMGD Delete short message

The AT+CMGD write command deletes a short message from the preferred message storage <mem1> location <index>. If <delflag> is present and not set to 0 then the ME shall ignore <index> and follow the rules for <delflag> shown below. If deleting fails, final result code +CMS ERROR is returned.

The AT+CMGD test command returns the valid <index> locations of the preferred <mem1> and the supported <delflag> values.

Syntax

Test Command

```
AT+CMGD=?
```

Response(s)

```
+CMGD: (list of supported <index>s), (list of supported <delflag>es)
OK
```

Write Command

```
AT+CMGD=<index>[, <delflag>]
```

Response(s)

```
OK
ERROR
+CMS ERROR: <err>
```

PIN	✈	Last
+	+	-

Reference(s)

3GPP TS 27.005 [43]

Parameter Description

<index>(num)

Integer type; value in the range of location numbers supported by the associated memory. See <index>.

<delflag>(num)

0	(Or omitted) delete the message specified in <index>.
1	Delete all read messages from preferred message storage, leaving unread messages and stored mobile originated messages (whether sent or not) untouched.
2	Delete all read messages from preferred message storage and sent mobile originated messages, leaving unread messages and unsent mobile originated messages untouched.
3	Delete all read messages from preferred message storage, sent and unsent mobile originated messages leaving unread messages untouched.
4	Delete all messages from preferred message storage including unread messages.

Note

- If there is no short message stored at the selected index, the response is OK too.

12.4 AT+CMGF Select SMS message format

The AT+CMGF command specifies the input and output format of the short messages.

Syntax

Test Command

AT+CMGF=?

Response(s)

+CMGF: (list of supported<mode>s)
OK

Read Command

AT+CMGF?

Response(s)

+CMGF: <mode>
OK
ERROR
+CMS ERROR: <err>

Write Command

AT+CMGF=[<mode>]

Response(s)

OK
ERROR
+CMS ERROR: <err>

PIN	✈	Last
-	+	-

Reference(s)

3GPP TS 27.005 [43]

Parameter Description

<mode>(num)(&V)(&W)	
[0](&F)(P)	PDU mode (default when implemented)
1	Text mode

12.5 AT+CMGL List SMS messages from preferred store

The write command returns messages with status value <stat> from message storage <mem1> to the TE. If the status of the message is 'received unread', the status in the storage changes to 'received read'.
The execute command is the same as the write command with the given default for <stat>.

Syntax

Test Command

AT+CMGL=?

Response(s)

+CMGL: (list of supported <stat>s)
OK

Exec Command

AT+CMGL

Response(s)

+CMGL: (see write command for default of <stat>)
OK

Write Command

AT+CMGL=<stat>

Response(s)

Output if text mode (AT+CMGF=1) and command successful:
For SMS- SUBMITs and/or SMS-DELIVERs
+CMGL: <index>, <stat>, <oa>/<da>, [<alpha>], [<scts>][, <tooa>/<toda>, <length>]<CR><LF><data><CR><LF>
[...]
OK

For SMS-STATUS-REPORTs
+CMGL: <index>, <stat>, <fo>, <mr>, [<ra>], [<tora>], <scts>, <dt>, <st><CR><LF>
[...]
OK

For SMS-Commands
+CMGL: <index>, <stat>, <fo>, <ct><CR><LF>
[...]
OK

Output if PDU mode AT+CMGF=0 and command successful:
For SMS-SUBMITs and/or SMS-DELIVERs
+CMGL: <index>, <stat>, [<alpha>], <length><CR><LF><pdu><CR><LF>
[...]
OK

If error is related to ME functionality
ERROR
+CMS ERROR: <err>

PIN	✈	Last
+	+	-

Reference(s)

3GPP TS 27.005 [43]

Notes

- The selected <mem1> can contain different types of SMs (e.g. SMS-DELIVERs, SMS-SUBMITs, SMS-STATUS-REPORTs and SMS-COMMANDs), the response may be a mix of the responses of different SM types. TE application can recognize the response format by examining the third response parameter.
- If the ME is Java controlled, take into account that the AT Command API can handle responses up to a length of 1024 bytes. To avoid any longer reponses it is recommended not to read the entire range of phonebook entries at a time.

12.6 AT+CMGR Read SMS messages

The write command returns SMS message with location value <index> from message storage <mem1> to the TE. If status of the message is 'received unread', status in the storage changes to 'received read'.

When using Text mode it is recommended to set AT+CSDH=1. In this case the AT+CMGR write command responses will include detailed header information. See AT+CSDH for details.

Syntax

Test Command

AT+CMGR=?

Response(s)

OK

Write Command

AT+CMGR=<index>

Response(s)

Output if text mode (AT+CMGF=1) and command successful:
For SMS-DELIVER

+CMGR: <stat>, <oa>, [<alpha>], <scts>[, <tooa>, <fo>, <pid>, <dcs>, <sca>, <tosca>, <length>]<CR><LF><data>
[...]
OK

For SMS-SUBMIT

+CMGR: <stat>, <da>, [<alpha>][, <toda>, <fo>, <pid>, <dcs>, [<vp>], <sca>, <tosca>, <length>]<CR><LF><data>
[...]
OK

For SMS-STATUS-REPORT

+CMGR: <stat>, <fo>, <mr>, [<ra>], [<tora>], <scts>, <dt>, <st>
<data>
[...]
OK

For SMS-Commands

+CMGR: <stat>, <fo>, <ct>[, <pid>, [<mn>], [<da>], [<toda>], <length>]<CR><LF><data>
[...]
OK

Output if PDU mode (AT+CMGF=0) and command successful:
For SMS-SUBMITs and/or SMS-DELIVERs

+CMGR: <stat>, [<alpha>], <length><CR><LF><pdu>
[...]
OK

ERROR

+CMS ERROR: <err>

PIN	✈	Last
+	+	-

Reference(s)

3GPP TS 27.005 [43]

Notes

- Response if AT+CMGR is used to read an empty record index: +CMGR: 0,,0
- Response if AT+CMGR is used to read a non-existent record index: +CMS ERROR: invalid memory index

12.7 AT+CMGS Send SMS

AT+CMGS write command transmits a short message to network (SMS-SUBMIT).
After invoking the write command wait for the prompt ">" and then start to write the message. To send the message simply enter <CTRL-Z>.
To abort sending use <ESC>. Abortion is acknowledged with "OK", though the message will not be sent.
The message reference <mr> is returned by the ME on successful message delivery. The value can be used to identify the message in a delivery status report provided as an unsolicited result code.

Syntax

Test Command

AT+CMGS=?

Response(s)

OK

Write Command

If text mode (see AT+CMGF=1)

AT+CMGS=<da>[, <toda>]<CR> Text can be entered. <CTRL-Z>/<ESC>

Response(s)

+CMGS: <mr>[, <scts>]
OK
If sending fails see notes below.

Write Command

If PDU mode (see AT+CMGF=0)

AT+CMGS=<length><CR> PDU can be entered. <CTRL-Z>/<ESC>

Response(s)

+CMGS: <mr>[, <ackpdu>]
OK
If sending fails see notes below.

PIN	✈	Last
+	-	-

Reference(s)

3GPP TS 27.005 [43]

Notes

- Note that some providers do not recognize an @ symbol used in a short message. A widely used alternative is typing "*" as defined in 3GPP TS 23.040 [35].
- All characters entered behind the prompt ">" will be recognized as GSM characters. For example, "Backspace" (ASCII character 8) does not delete a character, but will be inserted into the short message as an additional physical character. As a result, the character you wanted to delete still appears in the text, plus the GSM code equivalent of the Backspace key.
- Message Length in Text Mode
  The maximum length of a short message depends on the used coding scheme: It is 160 characters if the 7 bit GSM coding scheme is used, and 140 characters according to the 8 bit GSM coding scheme.
  In case UCS2 character set selected it is highly recommended to set Data Coding Scheme (<dcs> of AT+CSMP) to 16-bit data, otherwise the length of sms user data is restricted to 88 octets. Even better for messages with UCS2 character set is the PDU Mode.
- In general but especially at baudrates below 19200 it is recommended to only use the command line termination character (ATS3) before starting text or PDU input. Use of line termination character followed by an additional response formatting character (ATS4) may cause the problem that the latter will become part of the input data.

12.8 AT+CMGW Write Short Messages to Memory

AT+CMGW execute and write commands transmit a short message (either SMS-DELIVER or SMS-SUBMIT) from TE to memory storage <mem2>. Memory location <index> of the stored message is returned. Message status will be set to 'stored unsent' unless otherwise given in parameter <stat>.

After invoking the execute or write command wait for the prompt ">" and then start to write the message. To save the message simply enter <CTRL-Z>. To abort writing use <ESC>. Abortion is acknowledged with "OK", though the message will not be saved.

Message Length in Text Mode: The maximum length of a short message depends on the used coding scheme configured with <dcs> of AT+CSMP:
7 bit GSM coding scheme: 160 characters
8 bit GSM coding scheme: 140 characters
16 bit GSM coding scheme: 70 characters.
The length of 8-bit data coded short messages has to be greater than 0.
For more information on data coding schemes and character sets refer to 3GPP TS 23.038 [34] and Section 1.8.1, GSM alphabet tables and UCS2 character values.

Syntax

Test Command

AT+CMGW=?

Response(s)

OK

Exec Command

If text mode (see AT+CMGF=1):

AT+CMGW

Response(s)

<CR> Text can be entered. <CTRL-Z>/<ESC>
+CMGW: <index>
OK
If writing fails
ERROR
+CMS ERROR: <err>

Write Command

If text mode (see AT+CMGF=1):

AT+CMGW=<oa>/<da>[, [<tooa>/<toda>][, <stat>]]<CR> Text can be entered. <CTRL-Z>/<ESC>

Response(s)

+CMGW: <index>
OK
If writing fails see notes below.

Write Command

If PDU mode (see AT+CMGF=0):

AT+CMGW=<length>[, <stat>]<CR> PDU can be entered. <CTRL-Z>/<ESC>

Response(s)

+CMGW: <index>
OK
If writing fails see notes below.

PIN	✈	Last
+	+	-

Reference(s)

3GPP TS 27.005 [43], 3GPP TS 23.038 [34]

Notes

- Note that some providers do not recognize an @ symbol used in a short message. A widely used alternative is typing "*" as defined in 3GPP TS 23.040 [35].
- In general but especially at baudrates below 19200 it is recommended to only use the command line termination character (ATS3) before starting text or PDU input. Use of line termination character followed by an additional response formatting character (ATS4) may cause the problem that the latter will become part of the input data.
- SMS-COMMANDs and SMS-STATUS-REPORTs cannot be stored in text mode.
- All characters entered behind the ">" prompt will be recognized as GSM characters. For example, "Backspace" (ASCII character 8) does not delete a character, but will be inserted into the short message as an additional physical character. As a result, the character you wanted to delete still appears in the text, plus the GSM code equivalent of the Backspace key.

12.9 AT+CMMS More Messages to Send

AT+CMMS controls the continuity of the SMS relay protocol link. If the feature is enabled (and supported by the currently used network) multiple messages can be sent faster as the link is kept open.

Syntax

Test Command	
AT+CMMS=?	
Response(s)	
+CMMS: (list of supported) <mode>s	

Read Command	
AT+CMMS?	
Response(s)	
+CMMS: <mode> OK	

Write Command	
AT+CMMS=<mode>	
Response(s)	
OK ERROR +CMS ERROR: <err>	

PIN	✈	Last
+	+	-

Reference(s)
3GPP TS 27.005 [43]

Parameter Description

<mode>(num)	
[0](P)	Feature disabled.
1	Keep link open until the time between the response of the latest message send command (AT+CMGS, AT+CMSS, etc.) and the next send command exceeds 1-5 seconds. Afterwards ME will close the link and automatically switches <mode> back to 0.
2	Keep link open until the time between the response of the latest messages send command (AT+CMGS, AT+CMSS, etc.) and the next send command exceeds 1-5 seconds. Afterwards ME will close the link, but will not reset <mode> to 0.

12.10 AT+CMSS Send short messages from storage

The write command sends message with location value <index> from message storage <mem2> to the network (SMS-SUBMIT or SMS-COMMAND). If new recipient address <da> is given for SMS-SUBMIT, it shall be used instead of the one stored with the message. Reference value <mr> is returned to the TE on successful message delivery. Value can be used to identify message upon unsolicited delivery status report result code.
If the optional parameter <da> is given, the old status of the short message at <index> remains unchanged (see <stat>).

Syntax

Test Command

AT+CMSS=?

Response(s)

OK

Write Command

If text mode (AT+CMGF=1):

AT+CMSS=<index>[, <da>[, <toda>]]

Response(s)

+CMSS: <mr>[, <scts>]
OK
If sending fails
ERROR
+CMS ERROR: <err>

Write Command

If PDU mode (AT+CMGF=0):

AT+CMSS=<index>[, <da>[, <toda>]]

Response(s)

+CMSS: <mr>[, <ackpdu>]
OK
If sending fails
ERROR
+CMS ERROR: <err>

PIN	✈	Last
+	-	-

Reference(s)

3GPP TS 27.005 [43]

12.11 AT+CNMA New Message Acknowledgement to ME/TE

In SMS text mode (AT+CMGF=1) execute command confirms reception of a new message (SMS-DELIVER or SMS-STATUS-REPORT) which is routed directly to the TE. In PDU mode (AT+CMGF=0) write command is used to send either positive (RP-ACK) or negative (RP-ERROR) acknowledgement to the network. Parameter <n> defines which one will be sent.
EHS6-A will not send another "+CMT" or "+CDS" URC to the TE until previous one is acknowledged with this command. If the ME does not receive acknowledgement within required time (network timeout), it sends an "RP-ERROR" message to the network. The ME will automatically disable routing to the TE by setting both <mt> and <ds> values of AT+CNMI to zero.

Syntax

Test Command

```
AT+CNMA=?
```

Response(s)

```
+CNMA: (list of supported <n>s)
OK
```

Exec Command

```
AT+CNMA
```

Response(s)

```
OK
ERROR
+CMS ERROR: <err>
```

Write Command

```
AT+CNMA=<n>
```

Response(s)

```
OK
ERROR
+CMS ERROR: <err>
```

PIN	✈	Last
+	-	-

Reference(s)

3GPP TS 27.005 [43]

Parameter Description

<n>(num)

Parameter required only for PDU mode.

0	Command operates similarly as in text mode.
1	Send positive (RP-ACK) acknowledgement to the network. Accepted only in PDU mode.
2	Send negative (RP-ERROR) acknowledgement to the network. Accepted only in PDU mode.

Notes

- Execute and write command shall only be used if AT+CSMS parameter <service> equals 1 (= phase 2+).
- Execute command can be used no matter whether text mode or PDU mode is activated. Write command is designed for the PDU mode only.

12.12 AT+CNMI SMS Event Reporting Configuration

AT+CNMI selects the procedure how the receipt of a new SMS from the network is indicated to the TE when TE is active. Please also consider general rules for URC signaling explained in Section 1.9, Unsolicited Result Code Presentation and in Section 2.12, Extended Configuration Settings.
Changing AT+CNMI parameters on one of the ME's interfaces will automatically restore AT+CNMI default settings on all other interfaces. This ensures that incoming short messages are always indicated on the interface from which the AT+CNMI command was most recently issued.
The rules <mt>=2 and <mt>=3 for storing received messages are possible only if phase 2+ compatibility is activated with AT+CSMS=1. The parameter <ds>=1 is only available in phase 2+.

Syntax

Test Command

```
AT+CNMI=?
```

Response(s)

```
+CNMI: (list of supported<mode>s), (list of supported <mt>s), (list of supported <bm>s), (list of supported <ds>s), (list of supported <bfr>s)
OK
```

Read Command

```
AT+CNMI?
```

Response(s)

```
+CNMI: <mode>, <mt>, <bm>, <ds>, <bfr>
OK
```

Write Command

```
AT+CNMI=<mode>[, <mt>[, <bm>[, <ds>[, <bfr>]]]]
```

Response(s)

```
OK
ERROR
+CMS ERROR: <err>
```

PIN	Last
+	-

Reference(s)

3GPP TS 27.005 [43]

Unsolicited Result Codes

URC 1

<mt>=1:

```
+CMTI: <mem3>, <index>
```

Indicates that new message has been received

URC 2

<mt>=2 (PDU mode enabled):

```
+CMT: [<alpha>], <length><CR><LF><pdu>
```

Indicates that new message has been received

URC 3

<mt>=2 (text mode enabled):

```
+CMT: <oa>, [<alpha>], <scts>[, <tooa>, <fo>, <pid>, <dcs>, <sca>, <tosca>, <length>]<CR><LF><data>
```

Indicates that new message has been received

URC 4

<bm>=2 (PDU mode enabled):

+CBM: <length><CR><LF><pdu>

Indicates that new cell broadcast message has been received

URC 5

<bm>=2 (text mode enabled):

+CBM: <sn>, <mid>, <dcs>, <page>, <pages><CR><LF><data>

Indicates that new cell broadcast message has been received

URC 6

<bm>=1 or 3:

+CBMI: <mem3>, <index>

Indicates memory location of newly received cell broadcast message

URC 7

<ds>=1 (PDU mode enabled):

+CDS: <length><CR><LF><pdu>

Indicates that new SMS status report has been received

URC 8

<ds>=1 (text mode enabled):

+CDS: <fo>, <mr>[, <ra>][, <tora>], <scts>, <dt>, <st>

Indicates that new SMS status report has been received

URC 9

<ds>=2:

+CDSI: <mem3>, <index>

Indicates that new SMS status report has been received

Parameter Description

<mode>(num)(&V)(&W)	
[0]	SMS related URCs are always buffered in the ME. If the buffer is full, the oldest indications are discarded and replaced with newly received indications.
1(&F)(P)	SMS related URCs are forwarded directly to the TE. However, if this is not possible because ME-TE link is reserved, e.g. during a data call, these URCs are discarded.
2	SMS related URCs are forwarded directly to the TE. However, if this is not possible because ME-TE link is reserved these URCs are buffered and flushed to the TE afterwards.

<mt>(num)(&V)(&W)	
Rules for storing received short messages depend on the relevant data coding method (refer to 3GPP TS 23.038 [34]), preferred memory storage (AT+CPMS) setting and this value.	
[0](&F)(P)	No SMS-DELIVER indications are routed to the TE.
1	Class 0 SMS-DELIVERs are routed directly to the TE via URC. For all other messages the following applies: If SMS-DELIVER is stored in UE, indication of the memory location is routed to the TE via URC.

2	SMS-DELIVERs, except class 2 messages and messages in the message waiting indication group (store message) are routed directly to the TE via URC.
3	Class 0 and 3 SMS-DELIVERs are routed directly to the TE via URCs defined for <mt>=2. Messages of other data coding schemes result in indication as defined for <mt>=1.

<bm>(num)(&V)(&W)

Rules for storing received CBMs depend on the relevant data coding method (refer to 3GPP TS 23.038 [34]), the setting of Select CBM Types (AT+CSCB) and this value:

[0](&F)(P)	No CBM indications are routed to the TE.
1	If CBM is stored into ME, indication of the memory location is routed to the TE.
2	New CBMs are routed directly to the TE via URC.
3	Class 3 CBMs are routed directly to TE using URC.

<ds>(num)(&V)(&W)

[0](&F)(P)	No SMS-STATUS-REPORTs are routed to the TE.
1	SMS-STATUS-REPORTs are routed to the TE via URC.
2	If SMS-STATUS-REPORT is routed into ME, indication of the memory location is routed to the TE via URC.

<bfr>(num)(&V)(&W)

[0](&F)(P)	ME's buffer of SMS related URCs is flushed to the TE when <mode> changes from 0 to 1, 2 or 3.
1	ME's buffer of SMS related URCs is cleared when <mode> changes from 0 to 1, 2 or 3.

<index>(num)

Integer type; value in the range of location numbers supported by the associated memory

Notes

- Parameters <mt>=2,3 and <ds>=1 are only available with GSM phase 2+ (see AT+CSMS=1). Incoming SMs or Status Reports have to be acknowledged with AT+CNMA=0 when using these phase 2+ parameters.
  If either a SM or a Status Report is not acknowledged, AT+CNMI parameters <mt>=2,3 and <ds>=1 will be set to zero as specified for AT+CNMA.
- Please note that parameters omitted in the write AT+CNMI command will be set to zero.

12.13 AT+CPMS Preferred SMS message storage

The write command selects memory storages <mem1>,<mem2>, <mem3> to be used for reading, writing, etc.

Syntax

Test Command

AT+CPMS=?

Response(s)

+CPMS: (list of supported <mem1>s), (list of supported <mem2>s), (list of supported <mem3>s)
OK

Read Command

AT+CPMS?

Response(s)

+CPMS: <mem1>, <used1>, <total1>, <mem2>, <used2>, <total2>, <mem3>, <used3>, <total3>
OK
ERROR
+CMS ERROR: <err>

Write Command

AT+CPMS=<mem1>[, <mem2>[, <mem3>]]

Response(s)

+CPMS: <used1>, <total1>, <used2>, <total2>, <used3>, <total3>
OK
ERROR
+CMS ERROR: <err>

PIN	✈	Last
+	+	-

Reference(s)

3GPP TS 27.005 [43]

Parameter Description

<used1>(num)

Number of messages currently in <mem1>

<used2>(num)

Number of messages currently in <mem2>

<used3>(num)

Number of messages currently in <mem3>

<total1>(num)

Number of messages storable in <mem1>

<total2>(num)

Number of messages storable in <mem2>

<total3>(num)

Number of messages storable in <mem3>

Note

- The Mobile Equipment storage "ME" offers space for 4 short messages, see <mem1>.

12.14 AT+CSCA SMS Service Center Address

Write command updates the SMSC address, through which mobile originated SMs are transmitted. In text mode, setting is used by send and write commands. In PDU mode, setting is used by the same commands, but only when the length of the SMSC address coded into the <pdu> parameter equals zero.

Syntax

Test Command

```
AT+CSCA=?
```

Response(s)

```
OK
```

Read Command

```
AT+CSCA?
```

Response(s)

```
+CSCA: <sca>, <tosca>
OK
```

Write Command

```
AT+CSCA=<sca>[, <tosca>]
```

Response(s)

```
OK
```

PIN	✈	Last
+	+	-

Reference(s)

3GPP TS 27.005 [43]

Notes

- This command writes the service center address to non-volatile memory.
- The SMS service center address should be entered as specified by the service provider.

12.15 AT+CSCB Select Cell Broadcast Message Indication

The test command returns the supported modes as a compound value.
The write command selects which types of CBMs are to be received by the ME.

Syntax

Test Command

AT+CSCB=?

Response(s)

+CSCB: (list of supported <mode>s)
OK

Read Command

AT+CSCB?

Response(s)

+CSCB: <mode>, <mids>, <dcss>
OK

Write Command

AT+CSCB=<mode>[, <mids>[, <dcss>]]

Response(s)

OK

PIN	✈	Last
+	+	-

Reference(s)

3GPP TS 27.005 [43]

Parameter Description

<mode>(num)

Message mode

0(P)	Accept messages that are defined in <mids> and <dcss>
1	Forbid messages that are defined in <mids> and <dcss>

<mids>(str)

Cell Broadcast Message ID specification

0...65534	Range of CBM identifiers
[“”](P)	Default value of this parameter is an empty string to indicate that no CBM identifiers are specified.

All different possible combinations of CBM IDs (e.g. "0,1,5,320-478,922,2000-3000").
In certain configurations, e.g. if using SIMs that contain data in Elementary File EF-CBMI (Cell Broadcast Message Identifier) less than six combinations may be available.
To access a SIM's Elementary File data refer to command AT+CRSM.

<dcss>(str)

CBM data coding scheme specification

[“”](P)	Default value of this parameter is empty string

All different possible combinations of CBM data coding schemes (e.g. "0-3,5"). Using default empty string leads to get all CBMs independent of their dcss.
A given <dcss> replaces any former value and is used for consecutive requests.

12.16 AT+CSDH Show SMS text mode parameters

The write command sets whether or not detailed header information is shown in text mode result codes.

Syntax

Test Command
AT+CSDH=?
Response(s)
+CSDH: (list of supported <show>s) OK
Read Command
AT+CSDH?
Response(s)
+CSDH:<show> OK
Write Command
AT+CSDH=<show>
Response(s)
OK

PIN	✈	Last
-	+	-

Reference(s)

3GPP TS 27.005 [43]

Parameter Description

<show>(num)(&W)	
[0](&F)(D)	Do not show header values defined in commands AT+CSCA and AT+CSMP (<sca>, <tosca>,<fo>,<vp>, <pid> and <dcs>) nor <length>, <toda> or <tooa> in "+CMT", AT+CMGL, AT+CMGR result codes for SMS-DELIVERs and SMS-SUBMITs in text mode; for SMS-COMMANDs in +CMGR result code, do not show <pid>,<mn>,<da>, <toda>, <length> or <cdata>
1	Show the values in result codes

12.17 AT+CSMP Set SMS Text Mode Parameters

AT+CSMP controls additional parameters needed when an SMS is sent to the network or placed in a storage if text format message mode is selected.
It is possible to set the validity period starting from the time when the short message is received by the SMSC (<vp> is in the range 0... 255) or define an absolute time for validity period termination (<vp> is a string). The format of <vp> is given by <fo>. The enhanced validity period format is given as hexadecimal coded string (e.g. <pdu>) with quotes.

Syntax

Test Command

```
AT+CSMP=?
```

Response(s)

```
OK
```

Read Command

```
AT+CSMP?
```

Response(s)

```
+CSMP:<fo>, <vp>/ <scts>, <pid>, <dcs>
OK
```

Write Command

```
AT+CSMP=<fo>, <vp>/<scts>[, <pid>[, <dcs>]]
```

Response(s)

```
OK
ERROR
+CMS ERROR: <err>
```

PIN	✈	Last
+	+	-

Reference(s)

3GPP TS 27.005 [43]

Parameter Description

<fo>(num)

First Octet

Depending on the command or result code: First octet of 3GPP TS 23.040 [35] SMS-DELIVER, SMS-SUBMIT, SMS-STATUS-REPORT, or SMS-COMMAND in integer format.

0...17(P)...255

<vp>(num)(NV)

Validity Period

Depending on SMS-SUBMIT <fo> setting: 3GPP TS 23.040 [35] TP-Validity-Period either in integer format or in time-string format (refer <dt>).

0...167(D)...255

<pid>(num)

Protocol Identifier

3GPP TS 23.040 [35] TP-Protocol-Identifier in integer format.

0(P)...255

<dcs>(num)

Data Coding Scheme

3GPP TS 23.038 [34] SMS Data Coding Scheme, or Cell Broadcast Data Coding Scheme in integer format.

0(P)...247

Note

- When storing a SMS DELIVER from the TE to the preferred memory storage in text mode (using the AT+CMGW write command), <vp> field can be used for <scts>.

12.18 AT+CSMS Select Message Service

Syntax

Test Command

AT+CSMS=?

Response(s)

+CSMS: (list of supported<service>s)
OK

Read Command

AT+CSMS?

Response(s)

+CSMS: <service>, <mt>, <mo>, <bm>
OK

Write Command

AT+CSMS=<service>

Response(s)

+CSMS: <mt>, <mo>, <bm>
OK
ERROR
+CMS ERROR: <err>

PIN	✈	Last
+	+	-

Reference(s)

3GPP TS 27.005 [43]

Parameter Description

<service>(num)(&V)(&W)

0(&F)(D)	3GPP TS 23.040 [35] and 3GPP TS 23.041 [36] (the syntax of SMS AT commands is compatible with 3GPP TS 27.005 [43] Phase 2 version 4.7.0; Phase 2+ features which do not require new command syntax may be supported, e.g. correct routing of messages with new Phase 2+ data coding schemes)
1	3GPP TS 23.040 [35] and 3GPP TS 23.041 [36] (the syntax of SMS AT commands is compatible with 3GPP TS 27.005 [43] Phase 2+ version; the requirement of <service> setting 1 is mentioned under corresponding command descriptions).

<mt>(num)(&V)

Mobile Terminated Messages:

0	Type not supported
1(P)	Type supported

<mo>(num)(&V)

Mobile Originated Messages:

0	Type not supported
1(P)	Type supported

<bm>(num)(&V)

Broadcast Type Messages:

0	Type not supported
1(P)	Type supported

Notes

- If CSMS mode is switched from Phase 2+ to Phase 2 and one or more AT+CNMI Parameter are Phase 2+ specific a "+CMS ERROR: unknown error" will appear. It is recommended to switch the AT+CNMI Parameters to Phase 2 specific values before entering Phase 2.
- Phase 2+ (<service>=1) must be set before the following features can be used:
  - Configuring procedures for indicating received short messages with the AT+CNMI parameters <mt>=2 or <mt>=3 and <ds>=1.
  - Acknowledging incoming short messages with AT+CNMA.
  - Receiving Status Reports and acknowledging them with AT+CNMA.

12.19 AT^SMGL List Short Messages from preferred store without setting status to REC READ

The write command allows to select a status type and lists, from the message storage <mem1>, all messages that currently have the specified <stat>. The major difference over the standard command AT+CMGL is that the status of the listed messages remains u n c h a n g e d (unread remains unread).
The execute command is the same as the write command, but uses the given default of <stat>.

Syntax

Test Command

AT^SMGL=?

Response(s)

same as AT+CMGL

Exec Command

AT^SMGL

Response(s)

^SMGL: (For default values of <stat>, see "Section 12.1, SMS Parameters.)
OK

Write Command

AT^SMGL=<stat>

Response(s)

same as AT+CMGL

PIN	✈	Last
+	+	-

Notes

- The selected <mem1> can contain different types of SMs (e.g. SMS-DELIVERs, SMS-SUBMITs and SMS-COMMANDs), the response may be a mix of the responses of different SM types. TE application can recognize the response format by examining the third response parameter.
- Users should be aware that when using this AT command quickly after SIM PIN authentication the SIM data may not yet be accessible, resulting in an error or a short delay before the requested AT command response is returned. See Section 21.1, Restricted access to SIM data after SIM PIN authentication for further detail.
- If the ME is Java controlled, take into account that the AT Command API can handle responses up to a length of 1024 bytes. To avoid any longer re-sponses it is recommended not to read the entire range of short message entries at a time.

12.20 AT^SMGR Read short message without setting status to REC READ

The AT^SMGR command is a proprietary command which has the same syntax as AT+CMGR. The only functional difference is that the status "REC UNREAD" of a short message is not overwritten to "REC READ".

Syntax

Test Command
AT^SMGR=?
Response(s)
OK

Write Command
AT^SMGR=<index>
Response(s)
see AT+CMGR

PIN	✈	Last
+	+	-

Note

- Users should be aware that when using this AT command quickly after SIM PIN authentication the SIM data may not yet be accessible, resulting in a short delay before the requested AT command response is returned. See Section 21.1, Restricted access to SIM data after SIM PIN authentication for further detail.

13. USIM related Commands

AT commands described in this chapter are related to the Subscriber Identity Module (USIM) connected to the EHS6-A.

13.1 AT+CCID USIM Card Identification Number

AT+CCID serves to query the USIM card identification number. This information is retrieved from USIM elementary file EF_{ICCID}; for details refer to 3GPP TS 11.11 [16], 3GPP TS 31.101 [17], 3GPP TS 31.102 [18].

Syntax

Test Command

```
AT+CCID=?
```

Response(s)

```
OK
```

Read Command

```
AT+CCID?
```

Response(s)

```
+CCID: <ICCID>
OK
ERROR
+CME ERROR: <err>
```

Exec Command

```
AT+CCID
```

Response(s)

```
+CCID: <ICCID>
OK
ERROR
+CME ERROR: <err>
```

PIN	✈	Last
-	+	-

Parameter Description

<ICCID>(str)

Integrated Circuit Card ID of the USIM

13.2 AT+CRSM Restricted SIM Access

AT+CRSM offers easy access of the Elementary Files on the USIM. Access to the USIM database is restricted to the commands which are listed at <command>.
All parameters of AT+CRSM are used as specified by 3GPP TS 11.11 [16], 3GPP TS 31.101 [17], 3GPP TS 31.102 [18]. EHS6-A handles internally all required USIM interface locking and file selection routines.
As response to the command, the EHS6-A sends the actual USIM information parameters and response data. Error result code "+CME ERROR" may be returned if the command cannot be passed to the USIM, e.g. if the USIM is not inserted. However, failure in the execution of the command in the USIM is reported in <sw1> and <sw2> parameters.

Syntax

Test Command

AT+CRSM=?

Response(s)

OK

Write Command

AT+CRSM=<command>[, <fileID>[, <P1>, <P2>, <P3>[, <data>][, <pathId>]]]

Response(s)

+CRSM: <sw1>,<sw2>[,<response>]
OK
ERROR
+CME ERROR: <err>

PIN	✈	Last
-	+	-

Reference(s)

3GPP TS 27.007 [44], 3GPP TS 11.11 [16], 3GPP TS 31.101 [17], 3GPP TS 31.102 [18]

Parameter Description

<command>(num)

USIM command number.

176	READ BINARY
178	READ RECORD
192	GET RESPONSE
214	UPDATE BINARY
220	UPDATE RECORD
242	STATUS

<fileID>(num)

Identifier for an elementary data file on USIM, if used by <command>.

<P1>(num)

Parameter to be passed on by the EHS6-A to the USIM.

0...255

<P2>(num)

Parameter to be passed on by the EHS6-A to the USIM.

0...255

<P3>(num)

Parameter to be passed on by the EHS6-A to the USIM.

0...255

<data>(str)

Information which shall be written to the USIM (hexadecimal character format).

<pathId>(str)

Contains the directory path of an elementary file on the UICC in hexadecimal format (e.g. "7F105F50").

<sw1>(num)

Status information from the USIM about the execution of the actual command. It is returned in both cases, on successful or failed execution of the command.

0...255

<sw2>(num)

Status information from the USIM about the execution of the actual command. It is returned in both cases, on successful or failed execution of the command.

0...255

<response>(str)

Response data in case of a successful completion of the previously issued command.
"STATUS" and "GET RESPONSE" commands return data, which gives information about the currently selected elementary data field. This information includes the type of file and its size.
After "READ BINARY" or "READ RECORD" commands the requested data will be returned.
<response> is empty after "UPDATE BINARY" or "UPDATE RECORD" commands.

13.3 AT+CSIM Generic USIM Access

AT+CSIM allows direct control of the USIM.
Compared to Restricted USIM Access command AT+CRSM, the definition of AT+CSIM allows the ME to take more control over the USIM interface.
For parameter and USIM result coding please refer to 3GPP TS 11.11 [16], 3GPP TS 31.101 [17], 3GPP TS 31.102 [18].
However, only the following USIM commands are fully supported by AT+CSIM: SELECT, STATUS, READ BINARY, UPDATE BINARY, READ RECORD, UPDATE RECORD, SEEK, INCREASE and GET RESPONSE. Other USIM commands will work in conjunction with the USIM but the correct interaction of the USIM with the EHS6-A is not guaranteed.

Syntax

Test Command

```
AT+CSIM=?
```

Response(s)

```
OK
```

Write Command

```
AT+CSIM=<length>, <command>
```

Response(s)

```
+CSIM: <length>,<response>
OK
ERROR
+CME ERROR: <err>
```

PIN	✈	Last
-	+	-

Reference(s)

3GPP TS 27.007 [44], 3GPP TS 11.11 [16], 3GPP TS 31.101 [17], 3GPP TS 31.102 [18]

Parameter Description

<length>(num)

Number of characters of <command> or <response> string.

<command>(str)

Command passed on by the ME to the USIM.

<response>(str)

Response data of the command returned by the USIM.

14. USIM Application Toolkit (USAT) Commands

This chapter describes AT commands and responses related to the EHS6-A's USIM Application Toolkit (USAT) implementation.

USAT is a technology that allows an application running on the USIM to control the GSM/UMTS Mobile Engine (ME); it is specified in 3GPP TS 11.14 [20], 3GPP TS 31.111 [21], ETSI TS 102 223 [22].
USAT provides a link between an application running on the USIM and the Customer Application (TE). The purpose of USAT is to allow the TE to send AT commands to the USAT interface and to display dedicated USAT activity on the user interface of the TE.

Following types of data are exchanged between the EHS6-A and the application running on the USIM:

- Proactive commands (PACs) are sent from the USIM application to the ME. Some PAC types are executed by the ME itself, comparable with AT commands. Other PAC types are immediately forwarded to the TE, e.g. "DISPLAY TEXT".
- Terminal Response is the ME's answer to the last PAC, sometimes to be provided by the TE.
- Envelope commands are sent from the ME or TE to the USIM Application, such as "MENU SELECTION".

14.1 AT^SSTA Remote-SAT Interface Activation

AT^SSTA write command can be used to determine the Remote-SAT activation mode <mode> and, if Explicit Response mode is enabled, to activate the Remote-SAT interface. Removing and inserting the SIM does not affect the activation status.
SAT commands which are not using the AT interface (non-MMI related SAT commands, e.g. PROVIDE LOCAL INFORMATION) are executed without activating Remote-SAT.
The read command can be used to request the current operating status and the used alphabet of the Remote-SAT interface.

Syntax

Test Command

AT^SSTA=?

Response(s)

^SSTA: (list of supported <state>s), (list of supported <Alphabet>s)
OK

Read Command

AT^SSTA?

Response(s)

^SSTA: <state>, <Alphabet>, <allowedInstance>, <SatProfile>, <userTOut>, <AppType>
OK

Write Command

AT^SSTA=<mode>[, <Alphabet>]

Response(s)

OK

PIN	✈	Last
-	+	-

Parameter Description

`<state>`(num)

ME Remote-SAT interface states

1	OFF
2	IDLE

`<Alphabet>`(num)(NV)

Setting becomes effective after restarting the ME.

0(D)	GSM character set Input of a character requests one byte, e.g. "Y".
1	UCS2 To display the 16 bit value of characters represented in UCS2 alphabet a 4 byte string is required, e.g. "0059" is coding the character "Y". For details please refer to ISO/IEC 10646.

`<allowedInstance>`(num)

Remote-SAT handling (i.e. `AT+STKPRO` URC and `AT+STKTR` sequence) is only usable via the channnel on which the Explicit Response (ER) mode was activated.
To change the serial channel execute `AT^SSTA`=1 on the desired channel and perform a restart.

0	SAT is already used on another instance.
1	SAT may be started on this instance via the write version of this command.

`<SatProfile>`(str)

SAT Terminal Profile according to 3GPP TS 11.14 [20], 3GPP TS 31.111 [21], ETSI TS 102 223 [22].
The profile tells the SIM Application which features (e.g. Proactive Commands) are supported by the SIM Application Toolkit implementation of the ME.

`<userTOut>`(num)

PAC user timeout in seconds.
This parameter is not applicable.

`<AppType>`(num)

SIM Application type.
This parameter shows the type of SIM application currently running.

0	(U)SIM not inserted
1	2G Application (SAT)
2	3G Application (USAT)

`<mode>`(num)(NV)

Select Remote-SAT activation mode.
Setting becomes effective after restarting the ME. Removing and inserting the SIM does not affect the activation status.

0(D)	Automatic Response (AR) mode. All commands and responses are exchanged automatically between the ME and the SIM application. This eliminates the need to enter any Remote-SAT commands including the `AT^SSTA` command. If AR mode is enabled the ME enters the OFF state (`<state>`=1) after restart.

1	Explicit Response (ER) mode. This mode is intended for use with an MMI. If ER mode is enabled the MMI is required to handle, via ME's Remote-SAT interface, all commands and responses transmitted to or from the SIM or USIM. If ER mode is enabled the ME enters the IDLE state (<state>=2) after reboot.

14.2 AT+STKPRO USAT Proactive Command URCs

The AT+STKPRO test command returns the set of proactive commands supported. For each proactive command there is a URC provided.

Syntax

Test Command

AT+STKPRO=?

Response(s)

+STKPRO: (list of supported <ProactCmd>s)
OK

PIN	✈	Last
-	+	-

Unsolicited Result Codes

URC 1

Refresh

+STKPRO: 01, <CmdQualifier>

URC 2

Set up event list

+STKPRO: 05, <EventList>

URC 3

Set up call

+STKPRO: 16, <DialNumber>, <Subaddr>, <CmdQualifier>, <Alpha1>, <IconId1>, <Alpha2>, <IconId2>

URC 4

Send SS

+STKPRO: 17, <SsData>, <Alpha>, <IconId>, <RefNumber>

URC 5

Send USSD

+STKPRO: 18, <Dcs>, <HexString>, <Alpha>, <IconId>, <RefNumber>

URC 6

Send SMS

+STKPRO: 19, <Alpha>, <IconId>, <RefNumber>

URC 7

Send DTMF

+STKPRO: 20, <Alpha>, <IconId>, <DtmfStr>

URC 8

Launch browser

+STKPRO: 21, <Url>, <Alpha>, <IconId>

URC 9

Play tone

```
+STKPRO: 32, <Tone>, <TimeUnit>, <Interval>, <Alpha>, <IconId>
```

URC 10

Display text

```
+STKPRO: 33, <CmdQualifier>, <Dcs>, <HexString>, <IconId>
```

URC 11

Get inkey

```
+STKPRO: 34, <CmdQualifier>, <Dcs>, <HexString>, <IconId>
```

URC 12

Get input

```
+STKPRO: 35, <CmdQualifier>, <Dcs>, <HexString>, <MaxRespLen>, <MinRespLen>,
<DefaultText>, <IconId>
```

URC 13

Select item

```
+STKPRO: 36, <CmdQualifier>, <Alpha>, <ItemId>, <TotalItems>, <ItemText>,
<NextAction>, <DefaultItem>, <IconId>, <IconIdListElem>
```

URC 14

Set up menu

```
+STKPRO: 37, <CmdQualifier>, <Alpha>, <ItemId>, <TotalItems>, <ItemText>,
<NextAction>, <IconId>, <IconIdListElem>
```

URC 15

Provide local information

```
+STKPRO: 38, <CmdQualifier>
```

URC 16

Set up idle mode text

```
+STKPRO: 40, <Dcs>, <HexString>, <IconId>
```

URC 17

Language notification

```
+STKPRO: 53, <Lang>
```

URC 18

Open channel

```
+STKPRO: 64, <CmdQualifier>, <Alpha>, <IconId>, <DialNumber>, <ReconInterval>,
<ReconTimeUnit>, <IdleInterval>, <IdleUnit>, <BearerType>, <BearerParam>,
<BufSize>, <LoginDcs>, <LoginText>, <PasswordDcs>, <PasswordText>,
<TransportLevel>, <TransportPort>, <SubaddrCs>, <DestAddrType>, <DestAddr>
```

URC 19

Close channel

```
+STKPRO: 65, <CmdQualifier>, <Alpha>, <IconId>
```

URC 20

Receive data

```
+STKPRO: 66, <CmdQualifier>, <Alpha>, <IconId>, <ChannelID>, <ChannelDataLen>
```

URC 21

Send data

```
+STKPRO: 67, <CmdQualifier>, <Alpha>, <IconId>, <ChannelID>, <ChannelData>
```

URC 22

Get channel status

```
+STKPRO: 68, <CmdQualifier>
```

Parameter Description

<ProactCmd>(num)

Proactive command

01	Refresh
05	Set up event list
16	Set up call
17	Send SS
18	Send USSD
19	Send SMS
20	Send DTMF
21	Launch browser (currently not supported by EHS6-A)
32	Play tone
33	Display text
34	Get inkey
35	Get input
36	Select item
37	Set up menu
38	Provide local information
40	Set up idle mode text
52	Run AT cmd info
53	Language notfication
64	Open channel
65	Close channel
66	Receive data
67	Send data
68	Get channel status

<CmdQualifier>(num)

Command qualifier. See 3GPP TS 11.14 [20], 3GPP TS 31.111 [21], ETSI TS 102 223 [22].

<Lang>(num)

2 byte string indicating the language

<EventList>(num)

04	User activity event
05	Idle screen available event

07	Language selection
08	Browser Termination event

<DialNumber>(num)

Called party number

<Subaddr>(num)

Called party subaddress

<Alpha>(str)

Text string

<Alpha1>(str)

Text string

<Alpha2>(str)

Text string

<IconId>(num)

Icon Identifier

<IconId1>(num)

Icon Identifier

<IconId2>(num)

Icon Identifier

<IconIdListElem>(num)

Icon ID list element

<SsData>(str)

Data string

<RefNumber>(num)

Reference number

<DtmfStr>(str)

DTMF string

<Tone>(num)

01	Dial tone
02	Call subscriber busy
03	Congestion
04	Radio path acknowledge
05	Radio path not available

06	Error / special information
07	Call waiting tone
08	Ringing tone
10	General beep
11	Positive acknowledgement tone
12	Negative acknowledgement or error tone

`<Interval>`(num)

Time duration in number of time units

0	Indicates a non-existing duration object
1...255	Multiples of `<TimeUnit>`

`<TimeUnit>`(num)

0	Minutes
1	Seconds
2	Tenth of seconds

`<IdleInterval>`(num)

Defines the duration when an idle connection is released automatically. If not present, the ME never shall release a connection automatically.

0	Indicates a non-existing duration object
1...255	Multiples of `<IdleUnit>`

`<IdleUnit>`(num)

0	Minutes
1	Seconds
2	Tenth of seconds

`<ReconInterval>`(num)

A duration for reconnect tries. The interval specifies the time interval of the duration in multiples of the reconnect time unit used.

0	Indicates a non-existing duration object
1...255	Multiples of `<ReconTimeUnit>`

`<ReconTimeUnit>`(num)

0	Minutes
1	Seconds
2	Tenth of seconds

`<TotalItems>`(num)

Total items

`<ItemId>`(num)

Item identifier (see 3GPP TS 11.14 [20], 3GPP TS 31.111 [21], ETSI TS 102 223 [22])

<ItemText>(num)

Item text string

<Url>(str)

URL that shall be loaded

<DefaultText>(str)

Text string

<DefaultItem>(str)

Default item, see <ItemId>

<Dcs>(str)

Data coding scheme

<HexString>(str)

String containing data in hexadecimal format

<MaxRespLen>(num)

Maximum response length

<MinRespLen>(num)

Minimum response length

<NextAction>(num)

Next action

<BearerType>(num)

1	Circuit switched (currently not supported by EHS6-A)
2	Packet switched
3	Default (currently not supported by EHS6-A)
255	Invalid

<BearerParam>(num)

Hex string containing detailed information dependent on the type.

<BufSize>(num)

The buffer the TE shall allocate for channel data.

<LoginDcs>(str)

Data coding scheme of the text string. Text strings may be coded in 7-bit, 8-bit or UCS2 (16-bit) for user authentication data if requested by the bearer connection.

<LoginText>(str)

Specifies user authentication data if requested by the bearer connection. Coding based on .

<PasswordDcs>(str)

Data coding scheme of the text string. Text strings may be coded in 7-bit, 8-bit or UCS2 (16-bit) for user authentication data if requested by the bearer connection.

<PasswordText>(str)

Specifies user authentication data if requested by the bearer connection. Coding based on .

<TransportLevel>(num)

Specifies the transport layer protocol of the UICC/TE connection.

1	UDP (as defined in RFC 768 [9])
2	TCP (as defined in RFC 793 [10]
255	No transport protocol specified

<TransportPort>(num)

Specifies the port number.

<SubaddrCs>(num)

Called party subaddress for CS bearers only

<DestAddrType>(num)

Type of destination address

33	IPv4 address
255	Invalid

<DestAddr>(str)

Specifies the destination point of the connection. Hex string.

<ChannelID>(num)

Specifies the id of BIP channel(1-7).

<ChannelDataLen>(num)

Specifies the data length that the user want to receive from a BIP channel. Hex string.

<ChannelData>(str)

Specifies the data that the user want to send to a BIP channel. Hex string.

14.3 AT+STKTR USAT Terminal Response Commands

Each AT+STKTR write command allows entering the response to a USAT proactive command which was displayed by the URC +STKPRO.

The AT+STKTR test command returns the list or proactive commands (see <ProactCmd> of AT+STKPRO.

Note: Value 0 in some of the commands specified below stands for parameter "last command" which is obsolete, but not removed so far.
For the general <Result>s 32, 33, 38, 52, 53, 55, 57 and 58, it is mandatory for the ME to provide a specific cause value by using the <AddResult> parameter (additional information). For others additional information will be ignored.

Syntax

Test Command

AT+STKTR=?

Response(s)

+STKTR: (list of supported <ProactCmd>s)
OK

Write Command

Refresh

AT+STKTR=01,<Result>[, <AddResult>]

Response(s)

OK
ERROR
+CME ERROR: <err>

Write Command

Set up event list

AT+STKTR=05,<Result>

Response(s)

OK
ERROR
+CME ERROR: <err>

Write Command

Set up call

AT+STKTR=16,<Result>[, <AddResult>]

Response(s)

OK
ERROR
+CME ERROR: <err>

Write Command

Send SS

AT+STKTR=17,<Result>[, <AddResult>]

Response(s)

OK
ERROR
+CME ERROR: <err>

Write Command

Send USSD

AT+STKTR=18,<Result>[, <AddResult>, 0, <Dcs>, <HexString>]

Response(s)

OK
ERROR
+CME ERROR: <err>

Write Command

Send SMS

AT+STKTR=19,<Result>[, <AddResult>]

Response(s)

OK
ERROR
+CME ERROR: <err>

Write Command

Send DTMF

AT+STKTR=20,<Result>[, <AddResult>]

Response(s)

OK
ERROR
+CME ERROR: <err>

Write Command

Launch browser

AT+STKTR=21,<Result>

Response(s)

OK
ERROR
+CME ERROR: <err>

Write Command

Play tone

AT+STKTR=32,<Result>[, <AddResult>]

Response(s)

OK
ERROR
+CME ERROR: <err>

Write Command

Display text

AT+STKTR=33,<Result>[, <AddResult>]

Response(s)

OK
ERROR
+CME ERROR: <err>

Write Command

Get inkey

AT+STKTR=34,<Result>, <AddResult>, 0, <Dcs>, <HexString>

Response(s)

OK

Write Command (Continued)

Get inkey

AT+STKTR=34,<Result>, <AddResult>, 0, <Dcs>, <HexString>

Response(s)

ERROR
+CME ERROR: <err>

Write Command

Get input

AT+STKTR=35,<Result>, <AddResult>, 0, <Dcs>, <HexString>

Response(s)

OK
ERROR
+CME ERROR: <err>

Write Command

Select item

AT+STKTR=36,<Result>, <AddResult>, 0, <Dcs>, <HexString>

Response(s)

OK
ERROR
+CME ERROR: <err>

Write Command

Set up menu

AT+STKTR=37,<Result>[, <AddResult>]

Response(s)

OK
ERROR
+CME ERROR: <err>

Write Command

Provide local information (generic)

AT+STKTR=38,<Result>, <AddResult>

Response(s)

OK
ERROR
+CME ERROR: <err>

Write Command

Provide local information: Set language

AT+STKTR=38,<Result>, <Lang>

Response(s)

OK
ERROR
+CME ERROR: <err>

Write Command

Set up idle mode text

AT+STKTR=40,<Result>[, <AddResult>]

Response(s)

OK
ERROR
+CME ERROR: <err>

Write Command

Language notification

AT+STKTR=53,<Result>, <Lang>

Response(s)

OK
ERROR
+CME ERROR: <err>

Write Command

Open channel

AT+STKTR=64,<Result>

Response(s)

OK
ERROR
+CME ERROR: <err>

Write Command

Close channel

AT+STKTR=65,<Result>

Response(s)

OK
ERROR
+CME ERROR: <err>

Write Command

Receive data

AT+STKTR=66,<Result>

Response(s)

OK
ERROR
+CME ERROR: <err>

Write Command

Send data

AT+STKTR=67,<Result>

Response(s)

OK
ERROR
+CME ERROR: <err>

Write Command

Get channel status

AT+STKTR=68,<Result>

Response(s)

OK
ERROR
+CME ERROR: <err>

PIN	✈	Last
±	+	-

Parameter Description

<ProactCmd>(num)

Decimal code that specifies the proactive command. See AT+STKPRO.

<Result>(num)

Result indicated as decimal code

0	Command performed successfully
1	Command performed with partial comprehension
2	Command performed with missing information
3	REFRESH performed with additional Efs read
4	Command performed successfully, but requested icon could not be displayed
5	Command performed but modified by call control by SIM
6	Command performed successfully, limited service
7	Launch browser
16	Proactive SIM session terminated by the user
17	Backward move in the proactive SIM session requested by the user
18	No response from user
19	Help information required by the user
20	USSD or SS transaction terminated by the user
32	ME currently unable to process command
33	Network currently unable to process the command
34	User did not accept call set-up request
35	User cleared down call before connection or network release
36	Action in contradiction with the current timer state
37	Interaction with call control by SIM, temporary problem
38	Launch browser generic error code
48	Command beyond ME's capabilities
49	Command type not understood by ME
50	Command data not understood by ME
51	Command number not known by ME
52	SS return error
53	SMS RP-ERROR
54	Error, required values are missing
55	USSD return error
57	Interaction with call control by SIM or MO short message control by SIM, permanent problem

<AddResult>(num)

Additional result

1...255	See 3GPP TS 11.14 [20], 3GPP TS 31.111 [21], ETSI TS 102 223 [22].

<Dcs>(num)

Data Coding scheme. See 3GPP TS 23.038 [34].

<HexString>(str)

String in hexadecimal format

<Lang>(num)

Language given as integer (e.g. 28261 = English)

14.4 AT+STKENV USAT Envelope Command

AT+STKENV allows to send an envelope command from the ME or TE to the USIM Application.

Syntax

Test Command

AT+STKENV=?

Response(s)

+STKENV:(list of supported <EnvCmd>s)
OK

Write Command

Menu Selection

AT+STKENV=211,<ItemId>[, <Help>]

Response(s)

OK
ERROR
+CME ERROR: <err>

Write Command

Event download

AT+STKENV=214,<Event>[, <Cause>]

Response(s)

OK
ERROR
+CME ERROR: <err>

PIN	✈	Last
±	+	-

Parameter Description

<EnvCmd>(num)

Decimal code that specifies the envelope command.

211	Menu selection
214	Event download

<ItemId>(num)

Item identifier

<Cause>(num)

Optional parameter for <Event>= 08 Browser termination

0	User termination
1	Error termination

<Help>(num)

Optional parameter for <EnvCmd> 211

0	Help is requested
1	Help is not requested

<Event>(num)	
04	User activity event
05	Idle screen available event
07	Language selection
08	Browser termination event (currently not supported by EHS6-A)

14.5 AT+STKCC USAT Call Control Notification

The +STKCC URC reports the status call control activities:

Unsolicited Result Codes

URC 1

Reported activity: Set up call

```
+STKCC: 1, <ResVal>, <Alpha>, <PhoneNumber>, <NumberType>
```

URC 2

Reported activity: Send Supplementary Service commmand

```
+STKCC: 2, <ResVal>, <Alpha>, <SsCode>
```

URC 3

Reported activity: Send USSD commmand

```
+STKCC: 3, <ResVal>, <Alpha>, <UssdCode>
```

URC 4

Reported activity: Send short message

```
+STKCC: 4, <ResVal>, <Alpha>, <ToSca>, <Sca>, <ToRa>, <Ra>
```

Parameter Description

<ResVal>(num)

Call control result value

0	Allowed
1	Not allowed
2	Allowed, with modification
254	USAT busy (status word SW=x9300)

<Alpha>(num)

Optional information provided by the USIM as text string

<PhoneNumber>(str)

Called party phone number

<NumberType>(num)

0...255	Type of number (ton) and numbering plan identifier (npi), e.g. 129 for national number, 145 for international number

<SsCode>(str)

Supplementary Service code

<UssdCode>(str)

USSD code

<ToSca>(num)	
0...255	Type of number (ton) and numbering plan identifier (npi) of Service Center address, e.g. 129 for national number, 145 for international number

<Sca>(num)
Service Center Address

<ToRa>(num)	
0...255	Type of number (ton) and numbering plan identifier (npi) of Recipient address, e.g. 129 for national number, 145 for international number

<Ra>(str)
Recipient Address

14.6 AT+STKCNF USAT Proactive Session Status

The status of the USAT proactive session is shown by unsolicited result code:

Unsolicited Result Code

`+STKCNF: <ProactCmd>, <Result>, <AddResult>, <Sw1>`

Parameter Description

`<ProactCmd>`(num)

Decimal code that specifies the proactive command. Same as list provided by AT+STKPRO plus value 129.

01	Refresh
05	Set up event list
16	Set up call
17	Send SS
18	Send USSD
19	Send SMS
20	Send DTMF
21	Launch browser (currently not supported by EHS6-A)
32	Play tone
33	Display text
34	Get inkey
35	Get input
36	Select item
37	Set up menu
38	Provide local information
40	Set up idle mode text
52	Run AT cmd info
53	Language notfication
64	Open channel
65	Close channel
66	Receive data
67	Send data
68	Get channel status
129	End of proactive session

`<Result>`(num)

General result indicated as decimal code. See AT+STKTR

`<AddResult>`(num)

Additional result

1...255	See 3GPP TS 11.14 [20], 3GPP TS 31.111 [21], ETSI TS 102 223 [22].

<Sw1>(num)

Status word indicated as decimal code. Provides information from the USIM about the execution of the last command. See 3GPP TS 11.11 [16] for list and description of possible values.

0...255

0	Command to USIM was suppressed.
144	Last command successfully executed and USAT cycle finished. No further PAC required. 144 = HEX 0x90.
145	Last command successfully executed. USAT cycle not yet finished. Next PAC is required. 145 = HEX 0x91.

14.7 Examples of how to Configure and Use the USAT

Below you can find selective examples of how to configure and use the USAT Toolkit if Explicit Response (ER) mode is enabled with AT^SSTA.

Examples

EXAMPLE 1

AT^SSTA=1	Set Explicit Response (ER) mode.
OK	
AT^SMSO	Switch off and restart the ME to make the change take effect.
^SMSO: MS OFF	
OK	
^SHUTDOWN	
^SYSLOADING	
^SYSSTART	
AT+CPIN="1234"	Entering SIM PIN.
OK	

EXAMPLE 2

SET UP MENU

+STKPRO: 37,0,"Special",1,3,"News",0,0,0	+STKPRO URC displays menu structure.
+STKPRO: 37,0,"Special",2,3,"EMail",0,0,0	
+STKPRO: 37,0,"Special",3,3,"Bank-ing",0,0,0	
AT+STKTR=37,0	Sending terminal response command for PAC 37.
OK	
+STKCNF: 37,0,255,144	+STKCNF URC confirms that command was successfully executed and USAT cycle has finished. No further PAC required.
AT+STKENV=211,2	Sending envelope command for selecting "EMail" option.
OK	
+STKCNF: 129, 0, 255, 144	+STKCNF URC indicates end of proactive session, confirms that last command was successfully executed and USAT cycle has finished. No further PAC required.

EXAMPLE 3

DISPLAY TEXT

+STKPRO: 33,128,4,"546F6F6C6B697420546573742031",0	+STKPRO URC indicates that PAC = 33 (Display text) is received. The sample text given in hexadecimal format means "Toolkit Test 1".
AT+STKTR=33,0	Sending terminal response command for PAC 33.
OK	
+STKCNF: 33,0,255,144	+STKCNF URC confirms that command was successfully executed and USAT cycle has finished. No further PAC required.

EXAMPLE 4

GET INKEY

+STKPRO: 34,0,4,"456E74657220222B22",0	+STKPRO URC indicates that PAC = 34 (Get inkey) is received. The text given in hexadecimal format means that "Enter +" is requested.
AT+STKTR=34,0,0,0,4,"2B"	Terminal response command for PAC 34 is sending "+" as HEX string "2B".

OK	
+STKCNF: 34,0,255,144	+STKCNF URC confirms that command was successfully executed and USAT cycle has finished. No further PAC required.

EXAMPLE 5

GET INPUT

+STKPRO: 35,0,4,"456E74657220313233343 5",5,5,"",0	+STKPRO URC indicates that PAC = 35 (Get input) is received. The text given in hexadecimal format means that "Enter 12345" is requested.
AT+STKTR=35,0,0,0,4,"3132333435"	Terminal response command for PAC 35 is sending "12345" as HEX string "3132333435".
OK	
+STKCNF: 34,0,255,144	+STKCNF URC confirms that command was successfully executed and USAT cycle has finished. No further PAC required.

15. Phonebook Commands

The AT commands described in this chapter allow the external application to access the phonebooks located in the EHS6-A's memory or on the attached Subscriber Identity Module (SIM).

15.1 AT+CNUM Read own numbers

AT+CNUM returns the subscribers own number(s) from the SIM.

Syntax

Test Command

```
AT+CNUM=?
```

Response(s)

```
OK
```

Exec Command

```
AT+CNUM
```

Response(s)

```
[+CNUM: [<alpha>], <number>, <type>]
[+CNUM: ... ]
OK
ERROR
+CME ERROR: <err>
```

PIN	✈	Last
+	+	-

Reference(s)

3GPP TS 27.007 [44]

Parameter Description

<alpha>(str)

Optional alphanumeric string associated with <number>.

<number>(str)

Phone number in format specified by <type>.

<type>(str)

Type of address octet, see also: AT+CPBR <type>.

15.2 AT+CPBR Read from Phonebook

AT+CPBR serves to read one or more entries from the phonebook selected with AT command AT+CPBS.

The AT+CPBR test command returns the location range supported by the current phonebook storage, the maximum length of <number> field and the maximum length of <text> field.
Note: Length information may not be available while SIM storage is selected. If storage does not offer format information, the format list contains empty parenthesizes.

The AT+CPBR write command determines the phonebook entry to be displayed with <location1> or a location range from <location1> to <location2>. Hence, if no <location2> is given only the entry at <location1> will be displayed.
If no entries are found at the selected location "OK" will be returned.

Syntax

Test Command

```
AT+CPBR=?
```

Response(s)

```
+CPBR: (1-<maxloc>), <nlength>, <tlength>
OK
ERROR
+CME ERROR: <err>
```

Write Command

```
AT+CPBR=<location1>[, <location2>]
```

Response(s)

```
[+CPBR: <location1>, <number>, <type>, <text>]
[+CPBR: <location2>, <number>, <type>, <text>]
OK
ERROR
+CME ERROR: <err>
```

PIN	✈	Last
+	+	-

Reference(s)

3GPP TS 27.007 [44], 3GPP TS 24.008 [39], 3GPP TS 11.11 [16], 3GPP TS 31.101 [17], 3GPP TS 31.102 [18]

Parameter Description

<location1>(num)

The first (lowest) location number within phonebook memory where to start reading. The maximum range supported by the current phonebook is given in the test command response.
If <location1> exceeds the upper bound <maxloc> (as indicated by the test command), command will respond with "+CME ERROR: invalid index".

<location2>(num)

The last (highest) location number within phonebook memory where to stop reading. The maximum range supported by the current phonebook is given in the test command response.
If both <location1> and <location2> are in the range indicated by the test command parameter <maxloc>, the list of entries will be output and terminated with "OK".
If <location2> exceeds the range indicated by the test command parameter <maxloc>, the list of entries will be output but terminated with "+CME ERROR: invalid index".

<number>(str)

Phone number in format specified by <type>, it may be an empty string.

<type>(num)

Type of address octet, which defines the used type of number (ton) and the numbering plan identification (npi). Please consider that for types other than 129 or 145 dialing from phonebook with ATD><mem><n> is, depending on the network, not always possible (refer to 3GPP TS 24.008 [39] subclause 10.5.4.7 for details). See also <type> of AT+CPBW.
Possible values are:

145	Dialing string <number> includes international access code character '+'
161	National number. Network support of this type is optional.
209	Dialing string <number> has been saved as ASCII string and includes non-digit characters other than "*", "#", "+" or "p". Note that phonebook entries saved with this type cannot be dialed.
255	Dialing string <number> is a command to control a Supplementary Service, i.e. "*", "#" codes are contained. Network support of this type is optional.
129	Otherwise
128...255	Other values, refer to 3GPP TS 24.008 [39], subclause 10.5.4.7 for details.

<text>(str)(+CSCS)

Text assigned to a phone number. The maximum length for this parameter is given with test command response parameter <tlength>.
If using an ASCII terminal characters which are coded differently in ASCII and GSM have to be entered via escape sequences as described in Section 1.8, Supported character sets.

<maxloc>(num)

Maximum location number for the currently selected storage. For phonebooks located on the SIM this value depends on the SIM card type.

<nlength>(num)

Maximum length of phone number for "normal" locations.

<tlength>(num)

Maximum length of <text> assigned to the telephone number. The value indicated by the test command is given in octets. If <text> is given as GSM characters each character corresponds to one octet. If the <text> string is given in UCS2, the maximum number of characters depends on the coding scheme used for the alpha field of the SIM according to 3GPP TS 11.11 [16], 3GPP TS 31.101 [17], 3GPP TS 31.102 [18], Annex B. In the worst case the number of UCS2 characters is at least one less than half the number of GSM characters.

Example

AT+CPBR=?	First run the AT+CPBR test command to find out the maximum range of entries stored in the active phonebook.
+CPBR:(1-100),20,17	EHS6-A returns the supported values, where 100 is the supported range of location numbers, 20 is the length of the phone number and 17 is the maximum length of the associated text.

```
AT+CPBR =1,3
+CPBR:1,"+999999",145,"Charlie"
+CPBR:2,"+777777",145,"Bill"
+CPBR:3,"+888888",145,"Arthur"
```

Then use the AT+CPBR write command to display the phonebook entries sorted by location numbers.

15.3 AT+CPBS Select phonebook memory storage

AT+CPBS selects the active phonebook storage, i.e. the phonebook storage that all subsequent phonebook commands will be operating on. Availability and capacity of phonebooks located on the SIM may vary depending on the provider and operator.

The read command returns the currently selected <storage>, the number of <used> entries and the <total> number of entries available for this storage.

The test command returns all supported <storage>s as compound value.

Syntax

Test Command

AT+CPBS=?

Response(s)

+CPBS: (list of supported <storage>s)
OK
ERROR
+CME ERROR: <err>

Read Command

AT+CPBS?

Response(s)

+CPBS: <storage>, <used>, <total>
OK
ERROR
+CME ERROR: <err>

Write Command

AT+CPBS=<storage>[, <password>]

Response(s)

OK
ERROR
+CME ERROR: <err>

PIN	✈	Last
+	+	-

Reference(s)

3GPP TS 27.007 [44]

Parameter Description

<storage>(str)

"SM"(P)	SIM phonebook.
"FD"	SIM fixed dialing phonebook (EF_FDN). Requires PIN2 to be given using <password> or AT+CPIN2.
"SN"	SIM service dialing number phonebook (EF_SDN). Read only.
"LD"	SIM Last number Dialed phonebook. Stores all voice call numbers dialed with ATD, but no data call numbers. Read only.
"ON"	SIM MSISDN (Own Number) phonebook.
"EC"	SIM emergency call code phonebook. Read only.
"BN"	SIM barred dialing number phonebook (EF_BDN). Requires PIN2 to be given using <password> or AT+CPIN2.

<used>(num)

Value indicating the number of used locations in selected memory storage.

<total>(num)

Value indicating the maximum number of locations allowed in the selected memory storage.

<password>(str)

String type value representing the PIN2-code required when selecting PIN2-code locked <storage> above (e.g. "FD", "BN"). Not necessary if PIN2 was set using AT+CPIN2 before.

15.4 AT+CPBW Write into Phonebook

The AT+CPBW write command can be used to create, edit and delete a phonebook entry at a <location> of the active storage selected with AT+CPBS.

The AT+CPBW test command returns the location range supported by the current storage, the maximum length of the <number> field, the range of supported <type> values and the maximum length of the <text> field. Note: The maximum <number> length may differ depending on USIM card, nevertheless <nlength> always presents the maximum possible value. In case of exceeding available number length, "+CME ERROR: Memory full" message is returned and the phonebook entry is not stored.

Syntax

Test Command

```
AT+CPBW=?
```

Response(s)

```
+CPBW: (1-<maxloc>), <nlength>, (list of supported <type>s), <tlength>
OK
ERROR
+CME ERROR: <err>
```

Write Command

```
AT+CPBW=[<location>][, <number>[[, <type>][, <text>]]]
```

Response(s)

```
OK
ERROR
+CME ERROR: <err>
```

PIN	✈	Last
+	+	-

Reference(s)

3GPP TS 27.007 [44], 3GPP TS 24.008 [39], 3GPP TS 11.11 [16], 3GPP TS 31.101 [17], 3GPP TS 31.102 [18]

Parameter Description

<location>(num)

Location number within phonebook memory. The maximum range supported by each storage type is indicated in the test command response. If <location> is not given, the first free entry will be used.
If <location> is given as the only parameter, the phonebook entry specified by <location> is deleted.

<number>(str)

Phone number in format specified by <type>. Parameter must be present, although it may be an empty string. Alphabetic characters are not permitted. The <number> may contain dialstring modifiers "*", "#", "+" or "p". However please note that entries containing *# codes cannot be stored together with international access code. For example, a dial string such as *31#+48123456789 can be dialed only by using the ATD command.
If other printable non-alphabetic characters are used the entry needs to be saved with <type>=209. Otherwise, if <type>=209 is not used any non-digit characters other than "*", "#", "+" or "p" will be removed from the string and only accepted modifiers from the GSM alphabet will be saved.

<type>(num)

Type of address octet, which defines the used type of number (ton) and the numbering plan identification (npi). Please consider that for types other than 129 or 145 dialing from phonebook with ATD><mem><n> is, depending on the network, not always possible (refer to 3GPP TS 24.008 [39] subclause 10.5.4.7 for details).
If <type> is not specified the unknown <type>=129 is used. If <number> contains a leading "+" <type>=145 (international) is used.
Supported values are:

145	Dialing string <number> includes international access code character "+"
161	National number. The network support for this type is optional.
209	Dialing string <number> will be saved as ASCII string. This is the default value, if <type> is not specified explicitly and characters other than "*", "#", "+" or "p" are included in <number>. Note that phonebook entries saved with this type cannot be dialed.
255	Dialing string <number> is a command to control a Supplementary Service, i.e. "*", "#" codes are contained. Network support of this type is optional.
129	Unknown number. If <type> is unknown and the <number> contains a leading "+", then this sign is removed.
128...255	Other values, refer to 3GPP TS 24.008 [39], subclause 10.5.4.7 for details.

<text>(str)(+CSCS)

Text assigned to the phone number. The maximum length of this parameter is given in the test command response <tlength>. When using an ASCII terminal, characters which are coded differently in ASCII and GSM have to be entered via escape sequences as described in Section 1.8, Supported character sets.

<maxloc>(num)

Maximum number of locations supported by the currently selected storage. For phonebooks located on USIM, this value varies depending on the USIM card. See AT+CPBS for typical values.

<nlength>(num)

Maximum length of phone number for "normal" locations.
ME allows to store numbers with <nlength> but memory size for storing numbers on SIM card is only 10 bytes for each. That gives maximum number length 10 for <type>=209 and 20 for other types. If the stored number is longer than this maximum value the rest of the number is saved to extended memory which is common for other records. Storing numbers which take more than 10 bytes, can lead to filling up extended memory on SIM card. As a result, "+CME ERROR: Memory full" will be indicated.

<tlength>(num)

Maximum length of <text> assigned to the telephone number. The value indicated by the test command is given in octets. If the <text> string is given in GSM characters, each character corresponds to one octet. If the <text> string is given in UCS2, the maximum number of characters depends on the coding scheme used for the alpha field of the USIM.

Examples

EXAMPLE 1

Make a new phonebook entry at the first free location

```
AT+CPBW=,"+431234567",145,"international"
```

EXAMPLE 2

Delete entry at location 1

```
AT+CPBW=1
```

15.5 AT+CPBF Find phonebook entries

The AT+CPBF write command searches the active phonebook (selected with AT+CPBS) for alphanumeric field entries starting with the given <findtext> string. The write command response returns all found entries sorted by their index number. Entry fields returned are <location> number, phone <number> stored there (of format <type>) and <text> associated with the number.

The AT+CPBF test command returns the maximum lengths of <nlength> and <tlength> fields.

Syntax

Test Command

```
AT+CPBF=?
```

Response(s)

```
+CPBF: <nlength>, <tlength>
OK
ERROR
+CME ERROR: <err>
```

Write Command

```
AT+CPBF=<findtext>
```

Response(s)

```
+CPBF: <location>, <number>, <type>, <text>
OK
ERROR
+CME ERROR: <err>
```

PIN	✈	Last
+	+	-

Parameter Description

<location>(num)

The location number in the range of location numbers of phonebook memory.

<number>(str)

Phone number in format specified by <type>, it may be an empty string.

<type>(num)

Type of address octet, which defines the used type of number (ton) and the numbering plan identification (npi). Please consider that for types other than 129 or 145 dialing from phonebook with ATD><mem><n> is, depending on the network, not always possible (refer to 3GPP TS 24.008 [39], subclause 10.5.4.7 for details). See also <type> of AT+CPBW.
Possible values are:

128	Restricted <number> includes unknown type and format.
145	Dialing string <number> includes international access code character '+'.
161	National number <number>. Network support of this type is optional.
209	Dialing string <number> has been saved as ASCII string and includes non-digit characters other than "*", "#", "+" or "p". Note that phonebook entries saved with this type cannot be dialed.

255	Dialing string <number> is a command to control a Supplementary Service, i.e. "*", "#" codes are contained. Network support of this type is optional.
129	Otherwise.

<text>(str)(+CSCS)

Text assigned to a phone number. The maximum length for this parameter is given with test command response parameter <tlength>.
If using an ASCII terminal characters which are coded differently in ASCII and GSM have to be entered via escape sequences as described in Section 1.8, Supported character sets.

<findtext>(str)(+CSCS)

String for finding the <text> in the active phonebook.

<nlength>(num)

Maximum length of phone number for "normal" locations.

<tlength>(num)

Maximum length of <text> assigned to the telephone number. The value indicated by the test command is given in octets. If <text> is given as GSM characters each character corresponds to one octet. If the <text> string is given in UCS2, the maximum number of characters depends on the coding scheme used for the alpha field of the SIM according to 3GPP TS 11.11 [16], 3GPP TS 31.101 [17], 3GPP TS 31.102 [18], Annex B. In the worst case the number of UCS2 characters is at least one less than half the number of GSM characters.

Example

AT+CPBF=?	First run the AT+CPBF test command to find out the lengths of <nlength> and <tlength> in the active phonebook.
+CPBF: 40,16	EHS6-A returns the supported values, where 40 is the maximum length of the phone number and 16 is the maximum length of the associated text.
AT+CPBF="cha"	Then use the AT+CPBF write command to find any <text> string in the phonebook.
+CPBF:1,"+999999",145,"Charlie"	

15.6 AT+CSVM Set voice mail number

The number to the voice mail server is set by AT+CSVM command.
The parameters <number> and <type> can be left out if the parameter <mode> is set to 0. The read command returns the status (enabled <mode>=1 or disabled <mode>=0), the currently selected voice mail <number> and the <type>.
The test command returns supported <mode>s and <type>s.

Syntax

Test Command

AT+CSVM=?

Response(s)

+CSVM: (list of supported <mode>s), (list of supported<type>s)
OK
ERROR
+CME ERROR: <err>

Read Command

AT+CSVM?

Response(s)

+CSVM: <mode>, <number>, <type>
OK
ERROR
+CME ERROR: <err>

Write Command

AT+CSVM=<mode>[, <number>[, <type>]]

Response(s)

OK
ERROR
+CME ERROR: <err>

PIN	Last
+ +	-

Reference(s)

3GPP TS 27.007 [44]

Parameter Description

<mode>(num)

0	Disable the voice mail number
1	Enable the voice mail number

<number>(str)(NV)

Phone number in format specified by <type>. Parameter must be present when setting (<mode>=1) the voice mail number. Alphabetic characters are not permitted. The <number> may contain dialstring modifiers "*", "#", "+" or "p".

<type>(num)

Type of address octet, which defines the used type of number (ton) and the numbering plan identification (npi). If <type> is not specified the unknown <type>=129 is used. If <number> contains a leading "+" <type>=145 (international) is used.
Supported values are:

128	Restricted <number> includes unknown type and format.

145	Dialing string <number> includes international access code character "+".
161	National number <number>. The network support for this type is optional.
129	National / international unknown.
128...255	Other values, refer to 3GPP TS 24.008 [39], subclause 10.5.4.7 for details.

Examples

EXAMPLE 1

Make a new voice mail number entry

AT+CSVM=1,"1234567890"	The <type> is not specified therefore the unknown <type>=129 is used.
OK	The voice mail number is written to ME.

EXAMPLE 2

Delete the voice mail number entry

AT+CSVM=0	The parameters <number> and <type> are not necessary.
OK	The voice mail number is deleted on ME.

EXAMPLE 3

Read an empty voice mail number entry

```
AT+CSVM?
+CSVM: 0,"",128
OK
```

16. Audio Commands

The AT Commands described in this chapter are related to the EHS6-A's audio interface.

IMPORTANT: Audio AT commands offer full functionality for the Analog Audio Interface by default, but the Digital Audio Interface can only be selected if enabled with AT^SCFG="GPIO/mode/DAI","std". If DAI resources are not available (AT^SCFG="GPIO/mode/DAI" = "gpio" or "rsv") trying to switch to DAI with AT^SAIC will be denied with "+CME ERROR: operation not allowed", and all other audio AT commands refer to the Analog Audio Interface. If DAI resources are available (AT^SCFG="GPIO/mode/DAI" = "std") then all audio AT commands are usable for the interface selected by AT^SAIC.

16.1 ATL Set monitor speaker loudness

ATL is implemented for V.250ter compatibility reasons only, and has no effect.

Syntax

Exec Command

```
ATL[<val>]
```

Response(s)

```
OK
ERROR
+CME ERROR: <err>
```

PIN	✈	Last
-	+	-

Reference(s): V.250

Parameter Description

<val>(num)

16.2 AT+CMUT Mute control

The AT+CMUT command mutes the microphone input. The command can be used in all audio modes during a voice call only. See AT^SNFS for more details on the various audio modes. As alternative, you can use the AT^SNFM command.
During an active call, users should be aware that when they switch back and forth between different audio modes (for example handsfree on/off) the value of <mute> does not change, i.e. the microphone mode is retained until explicitly changed.

Syntax

Test Command

AT+CMUT=?

Response(s)

+CMUT: (list of supported<mute>s)
OK

Read Command

AT+CMUT?

Response(s)

+CMUT: <mute>
OK
ERROR
+CME ERROR: <err>

Write Command

AT+CMUT=<mute>

Response(s)

OK
ERROR
+CME ERROR: <err>

PIN	✈	Last
±	+	-

Reference(s)

3GPP TS 27.007 [44]

Parameter Description

<mute>(num)

0(P)	Mute off
1	Mute on

16.3 AT+VTD Tone duration

This command refers to an integer <duration> that defines the length of tones transmitted with the AT+VTS command.

Syntax

Test Command

AT+VTD=?

Response(s)

+VTD: (list of supported<duration>s)
OK

Read Command

AT+VTD?

Response(s)

<duration>
OK
ERROR
+CME ERROR: <err>

Write Command

AT+VTD=<duration>

Response(s)

OK
ERROR
+CME ERROR: <err>

PIN	✈	Last
-	-	-

Reference(s)

3GPP TS 27.007 [44]

Parameter Description

<duration>(num)

Duration of the DTMF signal in 1/10 seconds with tolerance.

1...5(P)...255

16.4 AT+VTS DTMF and tone generation

AT+VTS is intended to send ASCII characters which cause the Mobile Switching Center (MSC) to transmit DTMF tones to a remote subscriber. In GSM this operates only in voice mode. If the optional parameter <duration> is left out, the tone duration is determined by the setting of AT+VTD. Up to 50 single characters can be sent through a single AT+VTS write command.

The AT+VTS write command sends a string which can be a combination of the following separated by comma.

1. <dtmf>: Single ASCII character (0...9,#,*, A, B, C, D). This is interpreted as a DTMF tone whose duration is set by AT+VTD.
2. {<dtmf>,<duration>}: This is interpreted as a DTMF tone whose duration is set by <duration>.

The AT+VTS test command returns a list of supported ASCII characters and the range of <duration>.

Syntax

Test Command

AT+VTS=?

Response(s)

+VTS: (list of supported <dtmf>s), (), (range of <duration>)
OK

Write Command

AT+VTS=<dtmf>[, <dtmf>[, {<dtmf>, <duration>}]]

Response(s)

OK
ERROR
+CME ERROR: <err>

PIN	✈	Last
-	-	-

Reference(s)

3GPP TS 27.007 [44]

Parameter Description

<dtmf>(u)

Single ASCII character in the set 0...9,#,*, A, B, C, D.

<duration>(num)

1...255	Tone duration in multiples of 100ms. <duration> can be used only in combination with <dtmf>. Both parameters shall be enclosed in curly brackets and separated by comma.

Examples

EXAMPLE 1

ATD030311028253;	Making a call.
OK	
AT+CLCC	Call established.
+CLCC: 1,0,0,0,0,"",128	
OK	
AT+VTS=1,2,3,4	Sending DTMF tones whose duration is set by AT+VTD.
OK	

AT+VTS=A OK	Sending one DTMF tone whose duration is set by AT+VTD.
AT+VTS={1,200},{B,254} OK	Sending DTMF tones whose duration is set by <duration>.
AT+VTS=1,2,3,4,5,{1,200},{B,254} OK	Combination of DTMF tones with duration set by AT+VTD and <duration>.

EXAMPLE 2

For compatibility with earlier EHS6-A releases the entire AT+VTS write command string can optionally be set in quotation marks:

ATD030311028253; OK	Making a call.
AT+CLCC +CLCC: 1,0,0,0,0,"",128 OK	Call established.
AT+VTS="1,2,3,4" OK	Sending DTMF tones whose duration is set by AT+VTD.
AT+VTS="A" OK	Sending one DTMF tone whose duration is set by AT+VTD.
AT+VTS="{1,200},{B,254}" OK	Sending DTMF tones whose duration is set by <duration>.
AT+VTS="1,2,3,4,5,{1,200},{B,254}" OK	Combination of DTMF tones with duration set by AT+VTD and <duration>.

16.5 AT^SAIC Audio Interface Configuration

AT^SAIC configures the interface connection of the active audio mode. The write command works in all audio modes from 1 to 10.
To allocate a specific audio mode to one of the audio interfaces, first select the audio mode with AT^SNFS and then choose the interface using AT^SAIC.

Syntax

Test Command

```
AT^SAIC=?
```

Response(s)

```
^SAIC:(list of supported <io>s)
OK
```

Read Command

```
AT^SAIC?
```

Response(s)

```
^SAIC: <io>
OK
ERROR
+CME ERROR: <err>
```

Write Command

```
AT^SAIC=<io>
```

Response(s)

```
OK
ERROR
+CME ERROR: <err>
```

PIN	✈	Last
-	+	-

Parameter Description

<io>(num)

Input and output selection

1	Digital input and output Switching to the Digital interface is possible only when DAI resources are available (AT^SCFG="GPIO/mode/DAI","std"). Otherwise the AT^SAIC write command will respond "+CME ERROR: operation not allowed".
2(P)	Analog input and output

Note

- The default audio interface is active each time the module is powered up.

16.6 AT^SNFI Set microphone path parameters

AT^SNFI controls the microphone path amplification. Read and write options of this command refer to the active audio mode and interface. The write command works only in audio modes 2 to 10.

Syntax

Test Command

AT^SNFI=?

Response(s)

^SNFI: (list of supported <inVolStep>s), (list of supported <inpgaStep>s), (list of supported <adclStep>s)
OK

Read Command

AT^SNFI?

Response(s)

^SNFI: <inVolStep>, <inpgaStep>, <adclStep>
OK
ERROR
+CME ERROR: <err>

Write Command

AT^SNFI=<inVolStep>, <inpgaStep>, <adclStep>

Response(s)

OK
ERROR
+CME ERROR: <err>

PIN	✈	Last
-	+	-

Parameter Description

<inVolStep>(num)

0...100	Microphone gain ranging from from -43.5 db to 6 dB, adjustable in steps of 0.5 dB. (0 = -96 dB, 1 = -43.5 dB, 88 = 0 dB, 99 = 5.5 dB, 100 = 6 dB).

This parameter is valid for all supported interfaces, it can be set to different values for different interfaces in one audio mode.

<inpgaStep>(num)

0...63	Microphone path gain ranging from -12 dB to 35.25 dB, adjustable in steps of 0.75 dB. (0 = -12 dB, 1 = -11.25 dB, 16 = 0 dB, 62 = 34.5 dB, 63 = 35.25 dB)

This parameter is only valid when the Analog interface is selected, it will not be displayed and has no effect for the Digital interface.

<adclStep>(num)	
0...255	Microphone path gain ranging from -71.625 dB to 23.625 dB, adjustable in steps of 0.375 dB. (0 = MUTE, 1 = -71.625 dB, 192 = 0 dB, 2 = -71.25 dB, 254 = 23.25 dB, 255 = 23.625 dB)

This parameter is only valid when the Analog interface is selected, it will not be displayed and has no effect for the Digital interface.

Notes

- The microphone mute status <MicSwitch> has no influence on value of <inVolStep> <inpgaStep> and <adclStep>
- Attention! When you adjust audio parameters avoid exceeding the maximum allowed level. Bear in mind that exposure to excessive levels of noise can cause physical damage to users!

16.7 AT^SNFM Set microphone audio path and power supply

The AT^SNFM read command returns the microphone mute status.
The AT^SNFM write command can be used to switch the microphone's audio path (muted / not muted).
The microphone can be muted or activated by changing <MicSwitch> in all audio modes (1 to 10) and all auido interfaces (Digital and Analog), during a voice call only. As an alternative, you can use the AT+CMUT command to mute the microphone.

Syntax

Test Command

```
AT^SNFM=?
```

Response(s)

```
^SNFM: (list of supported <MicSwitch>s)
OK
```

Read Command

```
AT^SNFM?
```

Response(s)

```
^SNFM: <MicSwitch>
OK
ERROR
+CME ERROR: <err>
```

Write Command

```
AT^SNFM=[<MicSwitch>]
```

Response(s)

```
OK
ERROR
+CME ERROR: <err>
```

PIN	✈	Last
-	+	-

Parameter Description

<MicSwitch>(num)

Microphone mute control parameter.
Evaluated only during voice calls.
Command does not depend on audio mode and audio interface.

0	Mutes the microphone.
1(P)	Activates the microphone.

Note

- During an active call, users should be aware that when they switch back and forth between different audio modes (for example handsfree on/off) and audio interfaces (for example Analog Interface/ Digital Interface) the value of <MicSwitch> does not change, i.e. the microphone mode is retained until explicitly changed.

16.8 AT^SNFO Set audio output (= loudspeaker path) parameter

AT^SNFO controls the earpiece path amplification. The read and write commands refer to the active audio mode and interface. The write command works only in audio modes 2 to 10.

Syntax

Test Command

AT^SNFO=?

Response(s)

^SNFO: (list of supported <outVolStep>s), (list of supported <sideToneStep>s), (list of supported <spkStep>s)
OK

Read Command

AT^SNFO?

Response(s)

^SNFO: <outVolStep>, <sideToneStep>, <spkStep>
OK
ERROR
+CME ERROR: <err>

Write Command

AT^SNFO=<outVolStep>, <sideToneStep>, <spkStep>

Response(s)

OK
ERROR
+CME ERROR: <err>

PIN	✈	Last
-	+	-

Parameter Description

<outVolStep>(num)

0...100	Speaker gain ranging from -43.5 dB to 6 dB, adjustable in steps of 0.5 dB. (0 = -96 dB, 1 = -43.5 dB, 88 = 0 dB, 99 = 5.5 dB, 100 = 6 dB).

This parameter is valid for all supported interfaces, it can be set to different values for different intefaces in one audio mode.

<sideToneStep>(num)

0...175	Sidetone gain ranging from -43.5 dB to 43.5 dB, adjustable in steps 0.5 dB. (0 = -96 dB, 175 = 43.5 dB)

This parameter is valid for both interfaces, it can be set to different values for different intefaces in one audio mode.

<spkStep>(num)

0...63	Speaker path gain ranging from -57 dB to 6 dB, adjustable in steps of 1 dB. (0 = -57 dB, 1 = -56 dB, 57 = 0 dB, 62 = 5 dB, 63 = 6 dB)

This parameter is only valid when the Analog interface is selected, it will not be displayed and has no effect for the Digital interface.

Note

- CAUTION! When you adjust audio parameters avoid exceeding the maximum allowed level. Bear in mind that exposure to excessive levels of noise can cause physical damage to users!

16.9 AT^SNFS Select audio hardware set

The AT^SNFS write command serves to set the audio mode required for the connected equipment. AT^SNFS can also be used in conjunction with AT^SAIC. This is useful, for example, if the audio interfaces are operated alternatively to benefit from different devices. Each audio mode can be assigned a specific interface at a time. To do so, first select the audio mode with AT^SNFS, then activate the audio interface with AT^SAIC. To switch back and forth it is sufficient to use AT^SNFS. You can also switch between different audio interfaces in the same audio mode with AT^SAIC only.

Syntax

Test Command

```
AT^SNFS=?
```

Response(s)

```
^SNFS: (list of supported <audMode>s)
OK
```

Read Command

```
AT^SNFS?
```

Response(s)

```
^SNFS: <audMode>
OK
ERROR
+CME ERROR: <err>
```

Write Command

```
AT^SNFS=<audMode>
```

Response(s)

```
OK
ERROR
+CME ERROR: <err>
```

PIN	✈	Last
-	+	-

Parameter Description

<audMode>(num)	
1	Audio mode 1: Standard mode optimized reference handset that can be connected to either digital or analog audio interface. Note: The default parameters are determined for type approval and are not adjustable with AT commands for all supported audio interfaces.
2	Audio mode 2: For a basic handsfree (speakerphone) device (Siemens Car Kit Portable).
3	Audio mode 3: For mono-headset.
4	Audio mode 4: For individual handset.
5	Audio mode 5: Customer specific mode.
6	Audio mode 6: Customer specific mode.
7	Audio mode 7: Customer specific mode.
8	Audio mode 8: Customer specific mode.
9	Audio mode 9: Customer specific mode.
10(D)	Audio mode 10: Transparent/TTY mode.

Notes

- The write command can be used during a voice call to switch back and forth between different modes. This allows the user, for example, to switch handsfree operation (speakerphone) on and off.
- Audio modes from 5 to 9 are customer modes that can be prepared for specific customer requirements.
- The default audio mode is active each time the module is powered up.

16.10 AT^SNFTTY Signal TTY/CTM Audio Mode Capability

EHS6-A offers basic support for equipment using the CTM standard (Cellular Text Telephone Modems). The benefit of CTM is that text characters typed on a TTY device (Text Telephone Type-writer) can be transformed into special audio burst signals for reliable transmission via the existing speech channels of a cellular phone system.
If CTM mode is activated, the ME will set the necessary bearer capability bit on outgoing (mobile originated) calls and incoming calls with this bearer capability bit set are accepted. The TE needs to decode the special audio burst signals.
If CTM mode is disabled, the ME will clear the bearer capability bit on mobile originated calls and incoming calls with the bearer capability bit set are rejected because the EHS6-A expects that CTM coded speech data cannot be decoded by the TE.
Designed to set the module's speech system into CTM mode, the AT^SNFTTY command allows a CTM device to be connected to one of the three audio interfaces of EHS6-A. Traditional TTY devices that do not incorporate CTM functionality can be connected through an external TTY-to-CTM adapter.
Related documents: Refer to the relevant standards, such as 3GPP TS 26.226 (ETSI TS 126 226) and 3GPP TS 23.228 (ETSI TS 123 226). 3GPP documentation can be retrieved, for example, from http://www.3gpp.org/specs/specs.htm. Application Note 22 "Using TTY/CTM equipment" supplies information needed to connect TTY/CTM equipment to the EHS6-A.

Requirements for using TTY/CTM features:

- TTY/CTM functionality requires audio mode 10 which is set by AT^SNFS command.
- Depending on which audio interface the CTM device is connected to, select the appropriate settings via AT^SAIC.

Syntax

Test Command

```
AT^SNFTTY=?
```

Response(s)

```
^SNFTTY: (list of supported <audioState>s)
OK
```

Read Command

```
AT^SNFTTY?
```

Response(s)

```
^SNFTTY: <audioState>
OK
ERROR
+CME ERROR: <err>
```

Write Command

```
AT^SNFTTY=<audioState>
```

Response(s)

```
OK
ERROR
+CME ERROR: <err>
```

PIN	✈	Last
-	-	-

Parameter Description

<audioState>(num)(NV)	
0(D)	Audio path is in normal speech mode.
1	Audio path is in TTY/CTM mode.

16.11 AT^SRTC Ring tone configuration

The AT^SRTC read command returns the current <type> and current <volume>. The read command can be used while test playback is off or on. In the latter case, see execute command for details.

The AT^SRTC execute command is intended only for testing. It starts to play a melody from the audio output currently selected with AT^SNFS. To deactivate test playback use AT^SRTC again.
During test playback, you can enter the write command to select another melody and adjust the volume. Also, you can enter the read command to check the type and volume of the current ring tone, and to view the status of playback (on / off).

The AT^SRTC write command chooses the type and volume of ring tones. The selected <type> and <volume> are stored non-volatile. The only exception is <type>=0 which is not stored because it is intended only to quickly stop the tone currently played. So <type>=0 only stops immediately the audible ring tone, but does not terminate the RING URC. In this case the AT^SRTC write command returns only OK.

Syntax

Test Command

```
AT^SRTC=?
```

Response(s)

```
^SRTC: (list of supported) <type>s, (list of supported) <volume>s
OK
```

Read Command

```
AT^SRTC?
```

Response(s)

```
^SRTC: <type>, <volume>, <status>
OK
ERROR
+CME ERROR: <err>
```

Exec Command

```
AT^SRTC
```

Response(s)

```
OK
ERROR
+CME ERROR: <err>
```

Write Command

```
AT^SRTC=<type>[, <volume>]
```

Response(s)

```
^SRTC: <type>, <volume>
OK
ERROR
+CME ERROR: <err>
```

PIN	✈	Last
-	+	-

Parameter Description

`<type>`(num)

Type of ring tone. You have a choice of 8 different ring tones and melodies. All will be played from the audio output selected with the AT^SNFS command. `<type>`=0 is only intended for stopping of current ringtone playback.

0	Stops the currently played tone immediately
1	Sequence 1
2	Sequence 2
3(D)	Sequence 3
4	Sequence 4
5	Sequence 5
6	Sequence 6
7	Sequence 7
8	Sequence 8

`<volume>`(num)

Volume of ring tone, varies from low to high.

0(D)	Mute
1	Very low
2	Low
3	Middle
4	High

`<status>`(num)

Status of test ringing. Indicates whether or not a melody is currently being played back for testing.

0	Switched off
1	Switched on

Note

- Before first using ring tones note that the following settings apply:
  We have chosen to let you decide your own preferences when you start using ring tones. Therefore, factory setting is ^SRTC: 3,0,0 (ring tones are muted). To activate ring tones for the very first time, first enter the write command and simply change the volume. After applying a firmware update the volume and type selected before the firmware update will be preserved.

16.12 AT^SAFH Audio File Handling

AT^SAFH allows playing voice prompts in AMR format.Implemented according to 3GPP TS 26.071 [41], the voice prompt feature supports source codec bit rates 12.2 kbps. Noise insertion and variable frame types are not supported.

- Playback: AMR file can be played from file flash system or RAM. AMR file can be only played locally.
- Recording: Speech spoken into the microphone can be captured into the module's RAM and afterwards played as voice prompt or stored in module's flash file system. Voice prompt recording uses the highest source codec bit rate of 12.2 kbps allowing a maximum of 30 minutes for a recorded voice prompt. Therefore, recording finishes automatically after 30 minutes unless you stop recording with <audioFileCmd>=3.

The AT^SIND command provides the "voiceprompt" indicator to notify the user when playback or recording starts and stops.

Syntax

Test Command

```
AT^SAFH=?
```

Response(s)

```
^SAFH: (list of supported <audioFileCmd>s), (max length of <audioFilePath>)
OK
```

Read Command

```
AT^SAFH?
```

Response(s)

```
^SAFH: <audioHandlerStatus>
OK
ERROR
+CME ERROR: <err>
```

Write Command

To start and stop voice prompt playback from FFS or RAM, store voice prompt from RAM to FFS, or to start and stop voice prompt recording in RAM:

```
AT^SAFH=<audioFileCmd>[, <audioFilePath>]
```

Response(s)

```
[^SAFH: <cmdResult>]
OK
ERROR
+CME ERROR: <err>
```

PIN	✈	Last
-	+	-

Reference(s)

3GPP TS 26.071 [42]

Parameter Description

<audioFileCmd>(num)

Audio file handling command

0	Start playback
1	Stop playback
2	Start recording (to internal RAM)

3	Stop recording (to internal RAM)
4	Store data from internal RAM to flash file system. Using the same <audioFilePath> name again will overwrite existing file. Storing from RAM to FFS can only be done after stopping recording. Otherwise command will return error.

<audioFilePath>(str)

Audio file path

Parameter is mandatory if <audioFileCmd>=0 (Start playback) or <audioFileCmd>=2 (Start recording).

Please consider that there is only one buffer in RAM available for voice prompts. The RAM may contain either a voice prompt loaded from the FFS or a recorded voice prompt. Therefore, loading a file from the FFS will delete a previously recorded voice prompt. Vice versa, recording a voiceprompt first clears the RAM.
The maximum length of the path and file name string is 127 characters.
The maximum size of each AMR file is 64 kBytes including 6 Bytes for the file header.

To select a voice prompt for playback from the FFS the *amr.file must be given as a fully qualified path and file name (beginning with "a:". Directory separator is "/" (002Fh). Example: a:/PATH/TO/VOICEPROMPT/file.amr

To play the voice prompt currently held in the RAM (file loaded from FFS or recorded via AT^SAFH=2), simply enter quotation marks "".

<cmdResult>(num)

Status of the requested audio file

0	No error
1	Error

<audioHandlerStatus>(num)

Voice prompt handler status

0(P)	Audio handler is not active
1	Playback of audio file is ongoing
2	Recording of audio file is ongoing
3	Storing AMR file on flash file system is ongoing

Note

- If DTMF decoding is activated (see AT^SIND, "dtmf" indicator) please note that processing of DTMF signals is not possible during voice prompt playback. Incoming DTMF tones can be detected only after finishing voice prompt playback.

Examples

EXAMPLE 1

```
AT^SAFH=2,"a:/vp/file1.amr"          Start recording an audio file.
^SAFH: 0                             No error.
OK
+CIEV: voiceprompt,2                 Recording of audio file started.
AT^SAFH=3                            Stop recording an audio file.
^SAFH: 0                             No error.
OK
+CIEV: voiceprompt,0                 Recording has finished.
```

EXAMPLE 2

`AT^SAFH=0,"a:/vp/file1.amr"`	Select audio file from FFS and start playback.
`^SAFH: 0`	No error.
`OK`	
`+CIEV: voiceprompt,1`	Playback starts.
`+CIEV: voiceprompt,0`	Playback has finished.

EXAMPLE 3

`AT^SAFH=4`	Store recorded audio file to FFS.
`^SAFH: 0`	No error.
`OK`	
`+CIEV: voiceprompt,1`	Playback starts.
`+CIEV: voiceprompt,0`	Playback has finished.

17. Java related Commands

This chapter describes the AT commands related to Java applications processed by the EHS6-A.

17.1 AT^SJAM Manage Java Application

The AT^SJAM write command manages the Java applications.

Syntax

Test Command

AT^SJAM=?

Response(s)

^SJAM: (list of supported <action>s), (max. string length of <midlet-url>s), (max. string length of <upwd>s)
OK

Write Command

AT^SJAM=<action>[, <midlet-url>, <upwd>]

Response(s)

For AT^SJAM=0 till 3
OK
If not successful:
ERROR
+CME ERROR: <err>

For AT^SJAM=4
[^SJAM:<midlet-url>, <midlet-name>, <midlet-vendor>, <midlet-version>, <midlet-autostart>, <midlet-suite-size>, <record-store-size>]
[^SJAM:<midlet-url>, <midlet-name>, <midlet-vendor>, <midlet-version>, <midlet-autostart>, <midlet-suite-size>, <record-store-size>]
[^SJAM:...]

For AT^SJAM=5
[^SJAM:<midlet-url>, <midlet-name>, <midlet-vendor>, <midlet-version>, <midlet-autostart>]
[^SJAM:<midlet-url>, <midlet-name>, <midlet-vendor>, <midlet-version>, <midlet-autostart>]
[^SJAM:...]
OK
If not successful:
ERROR
+CME ERROR: <err>

PIN	✈	Last
-	+	-

Reference(s)

Cinterion

Parameter Description

`<action>`(num)

The parameter controls the use of the Java Midlet

0	Install Midlet given by `<midlet-url>`
1	Start Midlet given by `<midlet-url>`
2	Stop Midlet given by `<midlet-url>`
3	Remove Midlet given by `<midlet-url>`
4	List installed Midlet(s)
5	List running Midlet(s)

`<midlet-url>`(str)

URL of the Java application

The application name must be given as a fully qualified pathname (a:/.../...) to the jad or jar file containing the desired application.
The local flash file system is identified by: A:. Directory separator is "/" (002Fh).

Examples:
AT^SJAM=1,"a:/java/jam/HelloUniverse.jad","sms_pw"
AT^SJAM=1,"a:/HelloUniverse.jad",""

`<midlet-name>`(str)

Midlet name

`<midlet-vendor>`(str)

Midlet vendor

`<midlet-version>`(str)

Version of the Java Midlet

`<midlet-suite-size>`(num)

size of the Java Midlet Suite

Size in bytes occupied by the midlet in FFS

`<record-store-size>`(num)

size of all records stores of Java Midlet

Size in bytes occupied by all record stores of the midlet in FFS

`<midlet-autostart>`(num)

Autostart property of the Java Midlet as defined in the jad or jar file. Detailed explanations can be found in [3]. The autostart capability set in the Java Midlet(s) also depends on the global command `AT^SCFG` "Userware/Autostart". If `AT^SCFG` "Userware/Autostart" is enabled then all Java Midlets with active `<midlet-autostart>` property will start automatically when the ME is powered up.

0	Autostart is not active for the specific `<midlet-url>`
1	Autostart is active for specific `<midlet-url>`

Notes

- The parameters <midlet-url> and <upwd> are mandatory, if the status of a Java Midlet is changed (install, start, stop, remove). See aso AT^SCFG "Userware/Passwd", <upwd>, for details on how to handle passwords.
- Only one instance of each Java Midlet can run at the same time.
- The string parameters are in IRA format
- The autostart property status informs if the autostart property exists in the .jad file of the midlet. In that case the midlet can be autostarted (see <ua>).
- As signatures are defined in jad files it is recommended to use only jad files for installing signed Java applications. When installing jar files keep in mind that the installed application would be unsigned.

17.2 AT^SJDL Java Download

AT^SJDL allows download a file into the ME Flash File System by starting the download process binary mode.

After entering the download mode by AT^SJDL write command the ME sends the start pattern "CONNECT" to indicate its ready state. Next, the terminal tool shall start to send the file.
The ME verifies the file. If the validation check and the download is successful the ME will send the response "JDL CRC32 <crc>" and "JDL END OK" and return to command mode to finish the download process.
Please note that binary data mode cannot be aborted if invoked without sending data. In this case the ME must be restarted.

Syntax

Test Command

```
AT^SJDL=?
```

Response(s)

```
OK
```

Read Command

```
AT^SJDL?
```

Response(s)

```
^SJDL: <size>
OK
ERROR
+CME ERROR: <err>
```

Write Command

Java Download

```
AT^SJDL=<mode>, <fileLength>, <fileName>
```

Response(s)

```
CONNECT
```

Indicates that ME has entered binary data mode. Data can be transferred.
When Java file data are updated the ME responses with possible answers:

```
JDL TIMEOUT
JDL CRC32 <crc>
JDL END OK

OK
ERROR
+CME ERROR: <err>
```

PIN	✈	Last
-	+	+

Parameter Description

<size>(num)

Available size in ME Flash File System.

<mode>(num)

Parameter is used to control the download mode.

1	Start Java download to ME Flash File System.
2	Remove file from ME Flash File System.

<fileLength>(num)

Length assigned to the file. The maximum length of this parameter is given in the read command response <size>.
This parameter is unused if <mode>=2 .

<fileName>(str)

Text assigned to the file relative to path A:/ in Flash File System. The maximum length of this parameter 128 bytes.

<crc>(num)

CRC32 value from <fileName>.

Examples

EXAMPLE 1

The following example is provided to illustrate the Java download of a file.

```
AT^SJDL=1,10,"test.txt"          Start Java download mode.
CONNECT                          ME has entered binary data mode.
                                 Terminal tool shall start to send the file.
JDL CRC32 0x73d30c0a             Download is successful.
JDL END OK                       ME returns to command mode.
OK
```

EXAMPLE 2

The following example is provided to illustrate the deletion of a file.

```
AT^SJDL=2,10,"test.txt"          Remove file.
OK
```

17.3 AT^SJMSEC Java Midlet Security

AT^SJMSEC configures the Java Midlet security. A detailed description of how to create the binary files and configure the Java security environment can be found in [3]. AT^SJMSEC can be operated in two modes.

Direct command mode: The subsequent <CmdData> parameter contains the Java security commands, such as:

- Del Customer Keystore
- Switch on/off Certificate Verification for HTTPS Connections
- Switch on/off OBEX Functionality
- Del Certificate
- Del all Certificates
- Del Https Client Certificate

Indirect command mode: Java security commands are contained in files stored in the FFS, such as the following:

- Set Customer Keystore
- Add Certificate
- Add HTTPS Client Certificate

IMPORTANT: After each Java security command the ME must be reset.

Syntax

Test Command

```
AT^SJMSEC=?
```

Response(s)

```
^SJMSEC:(list of supported <CmdMode>s), (max. string length of <CmdData>)
OK
```

Read Command

```
AT^SJMSEC?
```

Response(s)

```
^SJMSEC: <keystore_state>,<HTTPS_state>,<OBEX_state>,<HTTPS_cl_cert>
OK
ERROR
+CME ERROR: <err>
```

Write Command

```
AT^SJMSEC=<CmdMode>,<CmdData>
```

Response(s)

```
OK
```

If not successful:

```
^SJMSEC:<error_code>,<str>
ERROR
+CME ERROR: <err>
```

PIN	✈	Last
-	+	+

Parameter Description

<CmdMode>(str)	
Command mode	
“cmd“	Direct command mode The subsequent <CmdData> parameter contains the Java security commands.
“file“	Indirect command mode The subsequent <CmdData> parameter specifies the filename, in which the Java security command is stored. Each file shall be copied into the root directory of the module's flash file system. To copy the files the MES shall be used.

<CmdData>(str)
Command data
If <CmdMode>= "cmd": ASCII coded hex data of the Java security command. If <CmdMode>= "file": Name of the file which contains the Java security command (binary format).

<keystore_state>(str)	
Keystore usage	
“0“	No keystore installed. Internal mode dedicated for manufacturer.
“1“(D)	No keystore installed. Unsigned midlets can still be installed.
“2“	Keystore installed. Only signed midlets can be installed.

<HTTPS_state>(str)	
Security check	
“0“(D)	HTTPS connection or Secure Connection without check against the certificate store.
“1“	HTTPS connection or Secure Connection with check against the certificate store.

<OBEX_state>(str)	
“0“	Start of Module Exchange Suite is not permitted.
“1“(D)	Start of Module Exchange Suite is permitted.

<HTTPS_cl_cert>(str)	
HTTPS client certificate	
“0“(D)	Client certificate not installed.
“1“	Client certificate installed.

<error_code>(str)	
Error_codes	
“1“	wrong command format
“2“	wrong command parameter format
“3“	parameter unknown
“4“	command unknown
“5“	parameter IMEI is missing

“6“	parameter signature is missing
“7“	keystore error
“8“	certificate file exits
“9“	cannot create certificate file
“10“	certificate file does not exists
“11“	jsec.cfg error
“12“	cannot delete certificate file
“13“	certificate store does not exists
“14“	cannot read command file
“15“	IMEI is wrong
“16“	cannot create key file
“17“	unknown error

`<str>`(str)

Error string contains the Java exception message.

17.4 AT^SJNET Set Dialup Network Access Parameters

The AT^SJNET write command allows to create a profile which contains all parameters needed for automated network access through a dialup connection.

Syntax

Test Command

AT^SJNET=?

Response(s)

^SJNET:("gprs"), ("string length range of <entry point>"), ("string length range of <login>"), ("string length range of <password>"), ("string length range of <dns>"), (0-21600)
OK

Read Command

AT^SJNET?

Response(s)

^SJNET: <bearer service>, <entry point>, <login>, <password>, <dns>, <timeout>
OK
ERROR
+CME ERROR: <err>

Write Command

AT^SJNET=<bearer service>, <entry point>, <login>, <password>[, <dns>][, <timeout>]

Response(s)

^SJNET: <bearer service>, <entry point>, <login>, <password>, <dns>, <timeout>
OK
ERROR
+CME ERROR: <err>

PIN	✈	Last
+	+	-

Parameter Description

<bearer service>(str)(+CSCS)

""(P)	No bearer specified
"gprs"	Dialup access via GPRS

<entry point>(str)(+CSCS)

""(P)	If <bearer service> is "gprs", then parameter specifies the GPRS access point name.

<login>(str)(+CSCS)

""(P)	Specifies the login name for access to the dialup network. Parameter is global for all interfaces, volatile and will not be reset by AT&F.

<password>(str)(+CSCS)

""(P)	Specifies the password for access to the dialup network. Parameter is global for all interfaces, volatile and will not be reset by AT&F.

<dns>(str)(+CSCS)	
""(P)	Specifies the Primary DNS server (Nameserver) for the dialup network. The server address has to be specified in dotted IP address format (e.g. 145.146.147.148). If the parameter is omitted, the DNS assigned by the network is used. It is recommended to set manual DNS server addresses rather than using automatic DNS assignment. This avoids problems in case the network is unable to properly handle the automatic DNS service. Parameter is global for all interfaces, volatile and will not be reset by AT&F.

<timeout>(num)	
Idle Timeout in seconds	
0...[30](P)...21600	Specifies the Java network idle timeout, which is the number of seconds to wait before the network connection is terminated automatically after having closed the last socket on this connection The value 0 means no timeout at all (you have to terminate a GPRS connection using AT+CGATT=0). We recommend to use values greater than 10 seconds because otherwise you may get unintentional timeouts for slow network connections. Parameter is global for all interfaces, volatile and will not be reset by AT&F.

17.5 AT^SJOTAP Over The Air Application Provisioning

The AT^SJOTAP command serves to control and start OTAP operations for installing and updating Java applications over the air. Detailed explanations can be found in [3].
The AT^SJOTAP write command sets the password and all parameters required to install / delete a Java Application.
The AT^SJOTAP execute command starts the OTAP install process.

Syntax

Test Command

```
AT^SJOTAP=?
```

Response(s)

```
^SJOTAP:(max. string length of <SMS_pwd>), (max. string length of <Jad_URL>), (max. string length of <Appl_Dir>), (max. string length of <HTTP_User>), (max. string length of <HTTP_Pwd>), (list of supported <BS>), (max. string length of <Dest>), (max. string length of <Net_user>), (max. string length of <Net_pwd>), (max. string length of <DNS>), (max. string length of <NotifyURL>), (list of supported <Ignore_Sms_PID>), (list of supported <Hide_HTTP_auth_params>)
OK
```

Read Command

```
AT^SJOTAP?
```

Response(s)

```
^SJOTAP: <SMS_pwd>, <Jad_URL>, <Appl_Dir>, <HTTP_User>, <HTTP_Pwd>, <BS>, <Dest>, <Net_user>, <Net_pwd>, <DNS>, <NotifyURL>, <Ignore_Sms_PID>, <Hide_HTTP_auth_params>
OK
ERROR
+CME ERROR: <err>
```

Exec Command

```
AT^SJOTAP
```

Response(s)

```
OK
ERROR
+CME ERROR: <err>
```

Write Command

```
AT^SJOTAP=[<SMS_pwd>][, <Jad_URL>][, <Appl_Dir>][, <HTTP_User>][, <HTTP_Pwd>][, <BS>][, <Dest>][, <Net_user>][, <Net_pwd>][, <DNS>][, <NotifyURL>][, <Ignore_Sms_PID>][, <Hide_HTTP_auth_params>]
```

Response(s)

```
OK
ERROR
+CME ERROR: <err>
```

PIN	✈	Last
+	-	-

Parameter Description

<SMS_pwd>(str)

Password for OTAP SMS authentification

<Jad_URL>(str)

URL of update file

<Appl_Dir>(str)

Directory of Java application

Parameter is not supported

<HTTP_User>(str)

HTTP user name

<HTTP_Pwd>(str)

HTTP password

<BS>(str)

Bearer Service

“gprs“	Use Bearer service "GPRS".

<Dest>(str)

Destination

Access point name (APN) if <BS>="gprs".

<Net_user>(str)

User name for accessing the network

<Net_pwd>(str)

Password for accessing the network

<DNS>(str)

Domain Name Server

<NotifyURL>(str)

URL to which result codes are posted

<Ignore_Sms_PID>(str)

Ignore SMS PID

“on“	Set ignore SMS PID "on".
[“off“]	Set ignore SMS PID "off".

<Hide_HTTP_auth_params>(str)

Hide HTTP authentication parameters

“on“	Set hide HTTP authentication parameters "on".
[“off“]	Set hide HTTP authentication parameters "off".

Notes

- The authentication mode for GPRS is always PAP.
- All parameters (except <Ignore_Sms_PID> and <Hide_HTTP_auth_params>) which are left out in the write command are set to "not configured", while parameters which are entered as "" will be stored as an empty string.
- Parameters <Ignore_Sms_PID> and <Hide_HTTP_auth_params> which are entered as "" will be stored as "off".
- Parameters that have not been configured via AT command, can be configured via SMS (see [3]).
- Parameters that have been configured via AT command cannot be reconfigured / overwritten via SMS.
- If the execute command ends up with an error, one or more mandatory parameters have not been specified (see [3]).
- The string parameters are in IRA format
- When the Java application starts, all current calls will be terminated.

17.6 AT^SJRA Run Java Application

The AT^SJRA write command launches the Java application. The command is deprecated for ME and only provided for reasons of compatibility. Keep in mind that AT^SJRA command performs automatic deinstallation of the application. That means that if the application was installed via the AT^SJAM command and then run via the AT^SJRA then, at the end, the application will be automatically removed. Therefore the two commands AT^SJAM and AT^SJRA are mutually exclusive.

Syntax

Test Command

```
AT^SJRA=?
```

Response(s)

```
("IMlet path")
```

Write Command

```
AT^SJRA=<appName>
```

Response(s)

```
OK
```

If not successful:

```
ERROR
+CME ERROR: <err>
```

PIN	✈	Last
-	+	-

Parameter Description

<appName>(str)

Path of the Java application

The application name must be given as a fully qualified pathname (a:/.../...) to the jad file containing the desired application.
The local flash file system is identified by: A:. Directory separator is "/" (002Fh).
Example: *A:/java/jam/example/helloworld/helloworld.jad*

Notes

- When the Java application starts, all current calls will be terminated.
- If the module was powered off before the MIDlet exits normally, the MIDlet will not be automatically deinstalled.

18. Miscellaneous Commands

The AT Commands described in this chapter are related to various areas.

18.1 A/ Repeat Previous Command Line

Repeat previous AT command line.
In general, after beginning a command line with character "a" or "A" a second character "t", "T" or "/" has to follow. "/" acts as line terminating character. In case of using a wrong second character, it is necessary to start again with character "a" or "A".

Syntax

Exec Command
A/
Response(s)

PIN	✈	Last
-	+	-

Reference(s)
V.250

18.2 ATS3 Command Line Termination

ATS3 is implemented for compatibility reasons only, and has no effect.

Syntax

Read Command	
ATS3?	
Response(s)	
<n> OK	

Write Command	
ATS3=<n>	
Response(s)	
OK ERROR	

PIN	✈	Last
-	+	-

Reference(s)
ITU-T V.250 [15]

Parameter Description

<n>(num)(&V)(&W)

000...013(&F)...127

Notes

- Command ATS3 is dummy, and has no effect on module behavior.
- Read command will return value written by user or default value n=13.
- Write command will return OK or ERROR. OK - when parameter <n> is in range, ERROR otherwise.
- Despite OK returned in case of any parameter from range, no changes will be made.
- Parameter is volatile.
- If changing this setting the new value has no effect for "^SHUTDOWN" URC.

18.3 ATS4 Response Formatting

ATS4 is implemented for compatibility reasons only, and has no effect.

Syntax

Read Command
ATS4?
Response(s)
<n> OK

Write Command
ATS4=<n>
Response(s)
OK ERROR

PIN	✈	Last
-	+	-

Reference(s)
ITU-T V.250 [15]

Parameter Description

<n>(num)(&V)(&W)
000...010(&F)...127

Notes

- Command ATS4 is dummy, and has no effect on module behavior.
- Read command will return value written by user or default value n=10.
- Write command will return OK or ERROR. OK - when parameter <n> is in range, ERROR otherwise.
- Despite OK returned in case of any parameter from range, no changes will be made.
- Parameter is volatile.

18.4 ATS5 Command Line Editing

ATS5 is implemented for compatibility reasons only, and has no effect.

Syntax

Read Command

ATS5?

Response(s)

<n>
OK

Write Command

ATS5=<n>

Response(s)

OK
ERROR

PIN	✈	Last
-	+	-

Reference(s)

ITU-T V.250 [15]

Parameter Description

<n>(num)(&V)(&W)

000...008(&F)...127

Notes

- Command ATS5 is dummy, and has no effect on module behavior.
- Read command will return value written by user or default value n=8.
- Write command will return OK or ERROR. OK - when parameter <n> is in range, ERROR otherwise.
- Despite OK returned in case of any parameter from range, no changes will be made.
- Parameter is volatile.

18.5 AT^SFDL Firmware Download

AT^SFDL allows the application manufacturer to download EHS6-A firmware into the ME by starting the download process on a customer-designed update tool.

For this purpose the EHS6-A firmware update file must be available in *.USF format. This file is part of each product specific firmware package supplied by Gemalto M2M GmbH. The firmware file consists of records to be transferred one by one from the update tool to the ME.

This manual only describes the syntax of the AT^SFDL command. Details on technical requirements and steps to prepare the host application for this download solution can be found in "Application Note 16: Updating EHS6-A Firmware" [9]. An example for developing an appropriate update tool is included.

The command causes the ME to reset and enter the firmware download mode (this may take some milliseconds). After entering the download mode the ME sends the start pattern HEX 0x01 ("ANSWER_OK") to the update tool to indicate its ready state. Next, the update tool shall start to send the records of the firmware file. Each record received by the ME is acknowledged to the update tool. Once all records are successfully received, the ME shuts down automatically.

If a valid firmware is still installed, but the AT^SFDL command is issued without sending any firmware afterwards the ME will stay in ready state. In this case it must be switched off.

Syntax

Exec Command

```
AT^SFDL
```

Response(s)

```
OK
0x01
```

Write Command

```
AT^SFDL=<mode>
```

Response(s)

```
OK
ERROR
+CME ERROR: <err>
```

PIN	✈	Last
-	+	+

Parameter Description

<mode>(num)	
2	Launches firmware update mode to replace the EHS6-A's existing firmware with a new firmware provided on the internal flash file system. The firmware file has to be located in the root directory of the file system and has to be named "SAM_6260.usf".

18.6 AT^SFSA Flash File System Access

AT^SFSA provides access to the Flash File System. The following functionality is supported:

- Reading global status information, available storage and max. storage size
- Creating and deleting files and directories
- Reading file status information, e.g. file size, optional date
- Renaming files and directories
- Copying files
- Listing directory contents
- Computation and displaying CRC of a given file
- Reading and writing an arbitrary amount of data per call (max. 1500 bytes per single call)
- Providing random access to the file data and a seek function

Flash File System Requirements:
AT^SFSA="gstat" shows the maximum memory space of the FFS (see <StorageSize>) and the free memory space (see <FreeSpace>). As the file system is block structured the <FreeSpace> value will decrease only in full block multiples.
Keep in mind that the entire memory space comprises both user data and internal resources for the file system infrastructure. As a result, the free memory space depends on the file size, the number of files and the number of created directories. In short, the more files / folders you create, and the more internal data is used from the system, the less memory will be available for user data. If the limit is reached, the error code ^SFSA: 28 will be returned.

Please consider the following rules for an efficient FFS management:

- The maximum number of directories is limited to 100. The maximum number of files is limited little more than one thousand.
  Note: *It is not possible to use* these maximum numbers of file system entries, the actual amount of files and directories may be lower, because some of them are used internally by the Java system in the Java application manager, e.g. for installed MIDlets.
  Note: *Ensure not to fill up* the file system to its limits, otherwise the Java system may run into trouble.
- The subdirectory depth shall not be greater than 5.
- Allowed characters for path and file names:
  - Path and file names are alphanumeric. Allowed characters: A - Z, a - z, digits, underscore, and special characters used in file URL format defined in IETF RFCs 1738 and 2396.
  - Character "/" is a separator for directories and files, e.g. /directory/my_sub_dir/my_file.txt.
  - Both "." and ".." are illegal for directory names, "." as part of a file name is allowed.
  - File and directory names are case-sensitive.
  - Path names start with drive prefix "a:/" or "A:/".
- Length of files and paths (incl. drive prefix "a:/" or "A:/"): The maximum usable length is 127 GSM characters and accordingly 31 UCS2 characters (depending on character set selected with AT+CSCS).
- If the file is in open status, it must be closed first before executing other file operations such as copy, rename and remove.

Syntax

Test Command

```
AT^SFSA=?
```

Response(s)

```
^SFSA: "close", (range of <fh>)
^SFSA: "copy", (max. string length of <path>), (max. string length of <DestinationPath>)
^SFSA: "crc", (max. string length of <path>)
^SFSA: "gstat", (list of supported <drive>)
^SFSA: "ls", (max. string length of <path>)
^SFSA: "mkdir", (max. string length of <path>)
```

Test Command (Continued)

AT^SFSA=?

Response(s)

^SFSA: "open", (max. string length of <path>), (range of <flags>)
^SFSA: "read", (range of <fh>), (max. value of <size>)
^SFSA: "remove", (max. string length of <path>)
^SFSA: "rename", (max. string length of <path>), (max. string length of <name>)
^SFSA: "rmdir", (max. string length of <path>)
^SFSA: "seek", (range of <fh>), (range of <offset>), (list of supported <SeekFlags>)
^SFSA: "stat", (max. string length of <path>)
^SFSA: "write", (range of <fh>), (max. value of <size>)
OK

Write Command

Close a file. The file has to be successfully opened before.

AT^SFSA="close", <fh>

Response(s)

In case of success:
^SFSA: <result>
OK
In case of error:
^SFSA: <result>
ERROR
+CME ERROR: <err>

Write Command

Copy a file given by the <path> parameter to the file given by the<DestinationPath>.

AT^SFSA="copy", <path>, <DestinationPath>

Response(s)

In case of success:
^SFSA: <result>
OK
In case of error:
^SFSA: <result>
ERROR
+CME ERROR: <err>

Write Command

Compute CRC of a file.

AT^SFSA="crc", <path>

Response(s)

In case of success:
^SFSA: <crc>, <result>
OK
In case of error:
^SFSA: <result>
ERROR
+CME ERROR: <err>

Write Command

Read global status of FFS.

AT^SFSA="gstat", <drive>

Response(s)

In case of success:
^SFSA: <StorageSize>

Write Command (Continued)

Read global status of FFS.

AT^SFSA="gstat", <drive>

Response(s)

^SFSA: <FreeSpace>
^SFSA: <result>
OK
In case of error:
^SFSA: <result>
ERROR
+CME ERROR: <err>

Write Command

List content of a directory.

AT^SFSA="ls", <path>

Response(s)

In case of success:
[^SFSA: <name>]
[...]
^SFSA: <result>
OK
In case of error:
^SFSA: <result>
ERROR
+CME ERROR: <err>

Write Command

Create a directory. The directory in which the new directory should be created must already exist, i.e. the creation of intermediate sub-directories is not supported.

AT^SFSA="mkdir", <path>

Response(s)

In case of success:
^SFSA: <result>
OK
In case of error:
^SFSA: <result>
ERROR
+CME ERROR: <err>

Write Command

Open a file.

AT^SFSA="open", <path>, <flags>

Response(s)

In case of success:
^SFSA: <fh>, <result>
OK
In case of error:
^SFSA: <result>
ERROR
+CME ERROR: <err>

Write Command

Read from a file. The file has to be opened for reading before.
The command returns <nbytes> bytes of binary data read from the file.
The number of bytes actually read can be equal or smaller than the requested number of bytes given by the <size> parameter.

AT^SFSA="read", <fh>, <size>

Response(s)

In case of success:
<CR><LF>^SFSA: <nbytes>, <result><CR><LF>
[Binary data of <nbytes> bytes]
OK
In case of error:
^SFSA: <result>
ERROR
+CME ERROR: <err>

Write Command

Remove a file. The file has to be closed.

AT^SFSA="remove", <path>

Response(s)

In case of success:
^SFSA: <result>
OK
In case of error:
^SFSA: <result>
ERROR
+CME ERROR: <err>

Write Command

Rename a file or directory.

AT^SFSA="rename", <path>, <name>

Response(s)

In case of success:
^SFSA: <result>
OK
In case of error:
^SFSA: <result>
ERROR
+CME ERROR: <err>

Write Command

Remove a directory. The directory has to be empty.

AT^SFSA="rmdir", <path>

Response(s)

In case of success:
^SFSA: <result>
OK
In case of error:
^SFSA: <result>
ERROR
+CME ERROR: <err>

Write Command

Move the pointer of the current position in a file.

AT^SFSA="seek", <fh>, <offset>[, <SeekFlags>]

Response(s)

In case of success:
^SFSA: <new offset>, <result>
OK
In case of error:
^SFSA: <result>
ERROR
+CME ERROR: <err>

Write Command

Read file status.

AT^SFSA="stat", <path>

Response(s)

In case of success:
^SFSA: <FileSize>
^SFSA: <DateLastAccess>
^SFSA: <DateLastModification>
^SFSA: <DateLastFileStatChange>
^SFSA: <StatAttributes>
^SFSA: <result>
OK
In case of error:
^SFSA: <result>
ERROR
+CME ERROR: <err>

Write Command

Write to a file. The file has to be opened for writing before.
After entering the command, the ME enters data entry mode and is ready to receive binary data over the serial interface. The ME awaits certain number of<size> bytes to write.
There are two ways to quit the data entry mode and revert to AT command mode:
- the exact number of bytes has been received by the ME (see the <size> parameter)
- timeout has expired. The timeout value for reception of each character is 30 seconds.
After invoking the command it is necessary to wait for the prompt "CONNECT" before entering data.
After the prompt a timer will be started to guard the input period.
If current position in the file is not set to the end, the data will be overwritten.
In case of timeout, the command ends with <result> 214. No data is written to the file in case of an error.

AT^SFSA="write", <fh>, <size>

Response(s)

In case of success:
CONNECT
[<size> bytes of binary data]

^SFSA: <result>
OK
In case of error:
^SFSA: <result>
ERROR
+CME ERROR: <err>

PIN ✈ Last
- + -

Parameter Description

`<fh>`(num)

File handle

The file handle is returned by the system in the open command. It has then to be used in the following requests, e.g. read, write, close, seek. The number of opened files is limited to 24.

0...23

`<path>`(str)(+CSCS)

Path to a file or a directory

For naming restrictions please see above rules for efficient FFS management.

`<DestinationPath>`(str)(+CSCS)

Path to a destination file

For naming restrictions please see above rules for efficient FFS management.

`<name>`(str)(+CSCS)

Name of a file or a directory

The list command shows directory names with appended slash.
For naming restrictions please see above rules for efficient FFS management.

`<flags>`(num)

File access flags

All available flags are divided into two groups: primary and optional. To select the desired flag combination, calculate the sum of the values and use the resulting value. Any combination of flags may be used.
Writing data to file can take up to 180 seconds due to internal flash file system data processing.

Primary group:
Those file access flags are not supported. However, any flag value setting is possible for compatibility reasons, but it is ignored. Hence, there is always full access to all files.

0	Read-only.
1	Write-only.
2	Read/write. Has priority over the read-only and write-only flags, when set.

Optional group:

4	Append. Set the current position in the file to the end of the file. If append flag is not used, current position will be set to the beginning of the file.
8	Create. Create the file if it does not exist. Otherwise the existing file will be opened.
16	Truncate. Truncate the file to the size 0. Has priority over Append, when set in combination with Append. Has effect only when used with the write or read/write flag. Otherwise the usage is erroneous. Depending on the file size, truncating may take a couple of seconds.

`<SeekFlags>`(num)

Seek flags

Determines how the new position is calculated.

[0]	Offset from the beginning of the file. The new position in the file equals `<offset>`. The offset has to be positive or zero.

1	Offset from the current file position. The new position in the file equals the current position + <offset>. The <offset> can be positive, zero or negative. In case the new position exceeds the allowed range for the <offset> parameter, the behavior of the seek operation is undefined.
2	Offset from the end of the file. The new position in the file equals the file size + <offset>. The offset has to be negative or zero.

<result>(num)

Result code

The result of the operation. The codes below 200 are proprietary file system error codes.

0	success
2	file not found
9	invalid file descriptor
13	invalid access
17	file already exists
22	seek to negative file pointer attempted
24	no more file descriptors available
28	no free space available
30	sharing violation
100	invalid drive
101	invalid path
102	invalid file name
103	generic internal error
104	path too long
201	command not recognized
202	incorrect parameter
203	incorrect number of input parameters
204	input parameter out of range
205	copy error: cannot open source file for reading
206	copy error: cannot open destination file for writing
207	copy error: cannot read from source file
208	copy error: cannot write to destination file
209	copy error: cannot close source file
210	copy error: cannot close destination file
211	crc error: cannot open file for reading
212	crc error: cannot read from file
213	crc error: cannot close file
214	data transfer error: timeout expired
215	data transfer error: internal error
216	directory listing error: no such directory
217	busy
218	internal error
219	unknown error

<StatAttributes>(num)

Status information attributes

Attributes of files. Bitmask is composed of sum of the following values:

0	regular file
8	volume

<size>(num)

The number of bytes to read or write.

1...1500

<FileSize>(num)

File size

The size of the file. 32-bit value.

0...4294967295

<StorageSize>(num)

Storage size

Storage size of FFS.

<FreeSpace>(num)

Free space

Free space on FFS.

<offset>(num)

The current position in a file. 32-bit signed value.

-2147483630...2147483630

<new offset>(num)

The new position in a file. 32-bit signed value.

-2147483630...2147483630

<crc>(num)

CRC check-sum computed on a file. 16-bit value.
The check-sum is calculated using the initial value 65535 (hex 0xFFFF). The polynomial generator is $x^{16} + x^{12} + x^5 + 1$ and the final XOR value equals 65535 (hex 0xFFFF). The low-bit order is used for the whole calculation (the least-significant bit at the leftmost position in a byte).

0...65535

<nbytes>(num)

Number of bytes

The number of bytes read.

1...1500

<content>(str)(+CSCS)

The content of the directory.

<drive>(str)(+CSCS)

Default "A:/".

<DateLastAccess>(str)

Date of last file access. Identical with <DateLastModification>.
Format is "yy/mm/dd,hh:mm:ss", where the characters indicate the two last digits of the year, followed by month, day, hour, minutes, seconds; for example 6th of July 2005, 22:10:00 hours equals to "05/07/06,22:10:00"

<DateLastModification>(str)

Date of last file modification

Format is "yy/mm/dd,hh:mm:ss", where the characters indicate the two last digits of the year, followed by month, day, hour, minutes, seconds; for example 6th of July 2005, 22:10:00 hours equals to "05/07/06,22:10:00"

<DateLastFileStatChange>(str)

Date of last file status change
Identical with <DateLastModification>.
Format is "yy/mm/dd,hh:mm:ss", where the characters indicate the two last digits of the year, followed by month, day, hour, minutes, seconds; for example 6th of July 2005, 22:10:00 hours equals to "05/07/06,22:10:00"

19. Hardware related Commands

All AT commands described in this chapter are related to the hardware interface of the EHS6-A. Further information regarding this interface is available in the "EHS6-A Hardware Interface Description" [2].

19.1 AT+CCLK Real Time Clock

The AT+CCLK write command sets the Real Time Clock in the ME.
The AT+CCLK read command shows the time.

Syntax

Test Command

```
AT+CCLK=?
```

Response(s)

```
OK
```

Read Command

```
AT+CCLK?
```

Response(s)

```
+CCLK: <time>
OK
```

Write Command

```
AT+CCLK=<time>
```

Response(s)

```
OK
ERROR
+CME ERROR: <err>
```

PIN	✈	Last
-	+	-

Reference(s)

3GPP TS 27.007 [44]

Parameter Description

<time>(str)

Format is "yy/mm/dd,hh:mm:ss", where the characters indicate the two last digits of the year, followed by month, day, hour, minutes, seconds; for example 6th of March 2013, 22:10:00 hours equals to "13/03/06,22:10:00"
Factory default is "04/01/01,00:00:00"

Note

- <time> is retained if the device enters the Power Down mode via AT^SMSO.

19.2 AT+CALA Alarm Configuration

AT+CALA allows to set an alarm time for the EHS6-A. When the alarm time is reached and the alarm is executed the ME returns an Unsolicited Result Code (URC) and the alarm time is reset to "00/01/01,00:00:00".
The alarm can adopt two functions, depending on whether or not you switch the ME off after setting the alarm:

- Reminder message: You can use the alarm function to generate reminder messages. For this purpose, set the alarm as described below and do not switch off or power down the ME. When executed the message comes as "+CALA" URC which optionally may include a user defined <text>.
- Alarm mode: You can use the alarm function to restart the ME when powered down. For this purpose, set the alarm as described below. Then power down the ME via AT^SMSO. When the alarm time is reached the ME will wake up in functionality level (AT+CFUN) which was valid before power down. Wake up is notified by the "^SYSSTART" URC and, if configured, by an additional "+CALA" URC with a user defined <text>.

AT+CALA test command returns the supported array index values <n>, the supported alarm types <type> and the maximum length of the text <tlength>.
AT+CALA read command returns the current alarm settings.

Syntax

Test Command

```
AT+CALA=?
```

Response(s)

```
+CALA: (list of supported<n>s), (list of supported<type>s), (list of supported<tlength>s)
OK
ERROR
+CME ERROR: <err>
```

Read Command

```
AT+CALA?
```

Response(s)

```
+CALA: <time>, <n>, <type>, <text>
+CALA: ...
OK
ERROR
+CME ERROR: <err>
```

Write Command

```
AT+CALA=<time>, <n>[, <type>[, <text>]]
```

Response(s)

```
OK
ERROR
+CME ERROR: <err>
```

PIN	✈	Last
-	+	-

Reference(s)

3GPP TS 27.007 [44]

Unsolicited Result Code

```
+CALA: [<text>]
```

Indicates reminder message.

Parameter Description

<time>(str)

Format is "yy/MM/dd,hh:mm:ss". For example, 6th of July 2005, 22:10:00 equals to "05/07/06,22:10:00". See also AT+CCLK.
If you attempt to set <time> to a date and time which is older than the ME's current time, one "+CALA" URC will be returned, and no alarm timer will be set.
To clear a given alarm before its scheduled time simply enter an empty string for parameter <time>.

<n>(num)

Integer type value indicating the array index of the alarm.
0 .. 4

<type>(num)

Integer type value indicating the type of the alarm.

0	Alarm indication: text message via serial interface

<text>(str)

String type value indicating the text to be displayed when alarm time is reached; maximum length is <tlength>. By factory default, <text> is undefined.
Note: <text> will be stored to the non-volatile flash memory when the device enters the Power Down mode via AT^SMSO. Once saved, it will be available upon next power-up, until you overwrite it by typing another text. This eliminates the need to enter the full string when setting a fresh alarm.
<text> should not contain characters which are coded differently in ASCII and GSM (e.g. umlauts), see also "Supported character sets" and "GSM alphabet tables".

<tlength>(num)

Integer type value indicating the maximum length of <text>. The maximum length is 16.

Notes

- After the alarm was executed the parameter <time> of AT+CALA will be reset to "00/01/01,00:00:00", but <text> will be preserved as described above.
- If ME is totally disconnected from power supply the most recently saved configuration of +CALA: <time>,<n>[,<type>[,<text>]] will be presented when ME is powered up.
- When an alarm is set on a given ASC interface only this interface will be allowed for further AT+CALA read/write operations. Using the read/write AT+CALA command on another interface will result an ERROR until the last alarm timer was executed or deleted.

Examples

EXAMPLE 1

You may want to configure a reminder message for July 31, 2005, at 9.30h, including the message "Good Morning".

```
AT+CALA="05/07/31,09:30:00",0,0,"Good Morning"
OK
```

Do not switch off the GSM engine.When the alarm occurs the ME returns the following URC:

```
+CALA: Good Morning
```

EXAMPLE 2

To set a fresh alarm using the same message as in Example 1, simply enter date, time and alarm index. <type>, <text>, <tlength> can be omitted:

```
AT+CALA="05/07/31,08:50:00",0
OK
```

When the alarm is executed the URC comes with the same message:

```
+CALA: Good Morning
```

EXAMPLE 3

To enable the ME to wake up into Alarm mode, e.g. on July 20, 2005, at 8.30h, enter

```
AT+CALA="05/07/20,08:30:00",0
OK
```

Next, power down the ME:

```
AT^SMSO
^SMSO: MS OFF
OK
^SHUTDOWN
```

When the alarm is executed the ME wakes up to functionality level (AT+CFUN) which was valid before power down and displays a URC. If available, this line is followed by the individual <text> most recently saved. If no individual message was saved only the first line appears.

```
^SYSSTART
+CALA: Good Morning
```

19.3 AT^SBV Battery/Supply Voltage

AT^SBV allows to monitor the supply (or battery) voltage of the module. The voltage is continuously measured at intervals depending on the operating mode of the RF interface. The duration of a measurement period ranges from 0.5s in TALK / DATA mode up to 50s when EHS6-A is in IDLE mode or Limited Service (deregistered). The displayed value is averaged over the last measuring period before the AT^SBV command was executed.

The measurement is related to the reference points of BATT+ and GND. For details on the reference points please refer to the Hardware Interface Description [2]. If the measured average voltage drops below or rises above the given voltage thresholds the ME will report alert messages by sending the "^SBC" URCs listed in Section 1.9.1, Common URCs.

Syntax

Test Command

```
AT^SBV=?
```

Response(s)

```
OK
ERROR
+CME ERROR: <err>
```

Exec Command

```
AT^SBV
```

Response(s)

```
^SBV: <Voltage>
OK
ERROR
+CME ERROR: <err>
```

PIN	✈	Last
-	+	-

Parameter Description

<Voltage>(num)

Supply (or battery) voltage in mV

19.4 AT^SCTM Critical Operating Temperature Monitoring

AT^SCTM allows to monitor the operating temperature range of the EHS6-A device. Refer to "EHS6-A Hardware Interface Description" [2] for specifications on critical temperature ranges. To avoid damage the module will shut down once the critical temperature is exceeded. The procedure is equivalent to the power-down initiated with AT^SMSO.

The AT^SCTM write command controls the presentation of URCs to report critical operating temperature limits. Use parameter <UrcMode> to enable (1) and disable (0) URC presentation.
Each time after the EHS6-A was switched on there is a guard period of 120 seconds. Until expiry of the guard timer, automatic thermal shutdown will be deferred and the presentation of all ^SCTM URC types is enabled even though <UrcMode> equals "0".

URCs indicating alert levels "1" or "-1" are intended to enable the user to take precautions, such as protect the EHS6-A from exposure to extreme conditions, or save or back up data etc. Except during the initial guard period after startup, the presentation of level "1", "-1" or "0" URCs depends on <UrcMode>.
Level "2" or "-2" URCs are followed by immediate shutdown except during the initial guard period. The presentation of these URCs is always enabled, i.e. they will be output even though <UrcMode> equals "0".

AT^SCTM read command returns:

- The URC presentation mode.
- Information about the current temperature range of the EHS6-A device.
- The board temperature (in degree Celsius) if parameter <tempCtrl>=1.

Syntax

Test Command

```
AT^SCTM=?
```

Response(s)

```
^SCTM:(list of supported <UrcMode>s)[, (list of supported <tempCtrl>s)]
OK
```

Read Command

```
AT^SCTM?
```

Response(s)

```
^SCTM: <UrcMode>, <UrcCause>[, <temp>]
OK
ERROR
+CME ERROR: <err>
```

Write Command

```
AT^SCTM=<UrcMode>[, <tempCtrl>]
```

Response(s)

```
OK
ERROR
+CME ERROR: <err>
```

PIN	✈	Last
-	+	-

Unsolicited Result Codes

URC 1

URCs will be sent to the TE when the temperature reaches or exceeds the critical level, or when it is back to normal.

^SCTM_B: <UrcCause>

URC 2

URC indicated after "^SCTM_B" URC with <UrcCause> value 2 or -2 before the ME switches off.

^SHUTDOWN

Parameter Description

<UrcMode>(num)	
URC presentation mode	
0(P)	Disable URC presentation (except for <UrcCause> equal to -2 or +2).
1	Enable URC presentation.

<UrcCause>(num)	
-2	Below lowest temperature limit (causes immediate switch-off)
-1	Below low temperature alert limit
0	Normal operating temperature
1	Above upper temperature alert limit
2	Above uppermost temperature limit (causes immediate switch-off)

<tempCtrl>(num)	
0(P)	Suppress output of <temp> in read command.
1	Output <temp> in read command.

<temp>(num)

Board temperature in Celsius. Is comprised between the lowest temperature warning level and the uppermost temperature warning level.

Examples

EXAMPLE 1

URCs issued when the operating temperature is out of range:

^SCTM_B: 1	Caution: Module close to overtemperature limit.
^SCTM_B: 2	Alert: Module is above overtemperature limit and switches off.
^SCTM_B: -1	Caution: Module close to undertemperature limit.
^SCTM_B: -2	Alert: Module is below undertemperature limit and switches off.

EXAMPLE 2

URCs issued when the temperature is back to normal (URC is output once):

^SCTM_B: 0	Module back to normal temperature.

19.5 AT^SLED LED Feature

AT^SLED controls the LED function provided by the EHS6-A's STATUS pin, which acts as an output and can be used to control a connected LED.
The AT^SLED command is functional only if LED functionality is enabled with AT^SCFG="Gpio/mode/SYNC" set to "std". The electrical specifications of the status pin and advice on how to connect the LED circuit can be found in [2]. The LED indicates the operating states listed below:

Table 19.1: EHS6-A Status and Mode Indication via LED

EHS6-A Status	<mode>=1	<mode>=2 <flash>= default	<mode>=2 <flash>= user defined
- GSM CS data call in progress or established - GSM voice call in progress or established - UMTS voice call in progress or established - UMTS CS data call in progress	Permanently on	10 ms on / 990 ms off	<flash> ms on / 990 ms off
- GSM PS data transfer - UMTS data transfer	Permanently on	10 ms on / 1990 ms off	<flash> ms on / 1990 ms off
ME registered to a network. No call, no data transfer	Permanently on	10 ms on / 3990 ms off	<flash> ms on / 3990 ms off
Limited Network Service (e.g. because no SIM/ USIM, no PIN or during network search)	500ms on / 500 ms off	500ms on / 500 ms off	500ms on / 500 ms off

Syntax

Test Command

```
AT^SLED=?
```

Response(s)

```
^SLED: (list of supported <mode>s), (range of supported <flash>s)
OK
```

Read Command

```
AT^SLED?
```

Response(s)

```
^SLED: <mode>[, <flash>]
OK
```

Write Command

```
AT^SLED=<mode>[, <flash>]
```

Response(s)

```
OK
ERROR
+CME ERROR: <err>
```

PIN	✈	Last
-	+	-

Parameter Description

<mode>(num)(&W)

LED operating mode

0(&F)	LED feature is disabled.

1(D)	LED lights steadily when the ME is registered to the network and either awake or in power saving state.
2	LED is flashing when the ME is in Limited Service or registered with a network and either awake or in power saving state. The duration of flashing can be configured using the parameter <flash>.

<flash>(num)(&W)

LED flash period

1...50	LED flash period (in milliseconds) if <mode>=2. LED off-time between flashing is approximately 4 seconds and is not configurable.

19.6 AT^SRADC Configure and Read ADC Measurement

The AT^SRADC command controls the module's Analog-to-Digital Converter. The ADC can be used to measure the voltage of external devices connected to the ADC input. AT^SRADC configures the parameters required for ADC measurement and returns the measurement result(s). The value(s) can be delivered once on request by using the single measurement mode, or periodically by specifying the measurement interval.

Syntax

Test Command

```
AT^SRADC=?
```

Response(s)

```
^SRADC: (list of supported <op>s), (list of supported <it>s)
OK
```

Read Command

```
AT^SRADC?
```

Response(s)

```
^SRADC: <op>, <it>
OK
ERROR
+CME ERROR: <err>
```

Write Command

Single measurement. Requires <op>=1, implies no interval (<it>=0).

```
AT^SRADC=<op>
```

Response(s)

```
^SRADC: <count>, <value>
OK
ERROR
+CME ERROR: <err>
```

Write Command

Periodic measurement. Requires <op>=1 and <it>=100ms...30000ms

```
AT^SRADC=<op>, <it>
```

Response(s)

```
OK
ERROR
+CME ERROR: <err>
```

PIN	✈	Last
-	+	-

Unsolicited Result Code

ADC measurement URC (only used in periodic measurement mode).

```
^SRADC: <count>, <value>[, <value>[, <value>[, <value>[, <value>[, <value>[,
<value>[, <value>[, <value>[, <value>[, <value>]]]]]]]]]]
```

Parameter Description

<op>(num)

Operation

Open or close ADC channel for measurement.

0	Close ADC channel (value of parameter <it> is ignored).
1	Open ADC channel

<it>(num)

Measurement interval

Parameter is used only if operation <op> is 1 (Open).

[0]	Single measurement mode
30,000...100	Output interval in ms in periodic measurement mode.

<value>(num)

Measurement value

0...1200	Measured raw value of the actual voltage applied at the ADC_IN input pin in mV.

<count>(num)

1...11	Number of measured samples In single measurement mode: <count> is always 1. In periodic measurement mode: <count> is number of <value>s indicated by each URC "^SRADC". The higher the sample rate set with <it>, the more measured values are reported within the URC "^SRADC".

Notes

- If power saving is enabled (see AT^SPOW and [2]), take into account that the periodic mode lets the ME consume current each time the measurement is performed. This reduces the effect of power saving and thus decreases the operation time.
- If an AT command is input on the same interface where the periodic measurement mode is on, up to 100 "^SRADC" URCs are queued up and sent after AT command completion.
  If more than 100 URCs occur before the AT command is completed their measurement values are lost.

Examples

EXAMPLE 1

Single measurement

AT^SRADC=1 ^SRADC: 1,78 OK	Open ADC channel for single measurement.

EXAMPLE 2

Periodic measurement at low sample rate (5s):

AT^SRADC=1,5000 ^SRADC: 1,76 ^SRADC: 1,78 ^SRADC: 1,76 ^SRADC: 1,76 AT^SRADC=0 OK	Start periodic measurement mode on the ADC channel. Samples are taken every 5s. Every 5s the URC "^SRADC" appears to report the measured voltages. The first parameter represents the number of measured samples, in this case only one. Stop the periodic measurement

EXAMPLE 3

Periodic measurement at high sample rate (250ms):

AT^SRADC=1,250	Start periodic measurement on the ADC channel. Samples are taken every 250ms. Every second a URC "^SRADC" appears to report the measured voltage. The number of samples is 5.
^SRADC: 5,76,76,77,76,76	
^SRADC: 5,76,76,75,76,76	
^SRADC: 5,77,77,76,76,76	
^SRADC: 5,76,76,75,76,76	
AT^SRADC=0	
OK	Stop the periodic measurement

EXAMPLE 4

Handling of "^SRADC" URCs and AT command execution on the same interface:

AT^SRADC=1,250	Start periodic measurement mode on the ADC channel. Samples are taken every 250ms.
^SRADC: 5,76,76,77,76,76	
^SRADC: 5,76,76,75,76,76	
^SRADC: 5,77,77,76,76,76	
^SRADC: 5,76,76,75,76,76	
AT^SRADC?	Input of AT command and <CR> takes some seconds.
^SRADC: 1,250	
OK	
^SRADC: 5,75,75,75,75,75	Some URCs were buffered during command input and sent after completion.
^SRADC: 5,76,76,77,76,76	
^SRADC: 5,76,76,75,76,76	
^SRADC: 5,77,77,76,76,76	
^SRADC: 5,76,76,75,76,76	
^SRADC: 5,77,77,76,76,76	
^SRADC: 5,76,76,77,76,77	
^SRADC: 5,76,76,75,76,76	

19.7 AT^SSPI Serial Protocol Interface

The AT^SSPI command enables the module to be connected to external I²C or SPI devices.

SPI lines are shared with GPIO lines or with the ASC0 line DSR0 and with ASC1 lines. Therefore, a connected SPI device is only accessible if AT^SCFG="Gpio/mode/SPI" is set to "std". Keep in mind that in this case the commands AT^SCFG="Gpio/mode/DSR0" and AT^SCFG="Gpio/mode/ASC1" automatically switch to "rsv".

The I²C/SPI datastream is mapped through an internal I²C/SPI driver to and from an ASCII hex protocol which can be exchanged with an internal application (JAVA) or an external application via V24.

The AT^SSPI write command configures and activates the I²C/SPI interface and changes from command mode into data mode. All values must be given in hexadecimal format (0 - 9, A - F) without "0x". For details on data mode please refer to Section 19.7.2, Transmitting Data over AT Interface.

Caution:
If I²C or SPI are opened from a Java application be sure to close the I²C or SPI channels before Java terminates.

Syntax

Test Command

```
AT^SSPI=?
```

Response(s)

^SSPI: (list of supported <basicConfiguration>s), (list of supported <wordLength>s), (list of supported <extendedSpiConfiguration>s)
OK

Read Command

```
AT^SSPI?
```

Response(s)

```
^SSPI: <connectionState>, <basicConfiguration>, <wordLength>,
<extendedSpiConfiguration>
OK
ERROR
+CME ERROR: <err>
```

Write Command

```
AT^SSPI=[<basicConfiguration>[, <wordLength>[, <extendedSpiConfiguration>]]]
```

Response(s)

```
CONNECT
```
(indicates that ME has entered data mode)
```
ERROR
+CME ERROR: <err>
```

PIN	✈	Last
-	+	+

Parameter Description

`<connectionState>`(num)

Parameter returned by the AT^SSPI? read command.
Indicates whether or not the I²C or SPI channel is used. When the channel is open and the ME is in data mode, the read command can only be used if one of the remaining interfaces is available.

[0]	Not connected (channel closed). All following parameters are the factory settings ^SSPI: 0,0010,0000,0000.
1	Connected (channel open, ME in data mode). All following parameters are the values currently used, for example ^SSPI: 1,0010,0000,0000.

`<basicConfiguration>`(num)

Parameter <basicConfiguration> is a 16 bit word which contains four subparameters to control the following functions:

Subparameter	Bit	Hexadecimal	Selected function
Interface type	D15 - D12	0 1	I²C bus (default) SPI device
Port	D11 - D8	0	Internal port
Data transfer rate	D7 - D4	0 1 0 1 2 3 4 5	I²C at 100 kbps I²C at 400 kbps (default) SPI at 100 kbps SPI at 250 kbps SPI at 500 kbps SPI at 1.083 Mbps SPI at 3.25 Mbps SPI at 6.5 Mbps
Protocol	D3 - D0	0	ASCII (hex coding)

`<wordLength>`(num)

For SPI only:

0000	Length of SPI word = 8 bits

`<extendedSpiConfiguration>`(num)

For SPI only: Parameter <extendedSpiConfiguration> is a 16 bit word which contains four subparameters to control the following functions:

Subparameter	Bit	Hexadecimal	Selected function
SPI mode	D15 - D12	0 1 2 3	Four different SPI modes. Phase and polarity of all SPI modes are illustrated in Section 19.7.1, Selecting SPI Mode.
Chip Select (CS) mode	D11 - D8	0	One Chip Select per Transfer Frame.
Arrangement of bytes	D7 - D4	0	Big endian
Bit sequence (arrangement of bits on the SPI)	D3 - D0	0	MSB first

19.7.1 Selecting SPI Mode

The figure shows the four types of SPI mode selectable by setting the appropriate hexadecimal value within the parameter <extendedSpiConfiguration>.

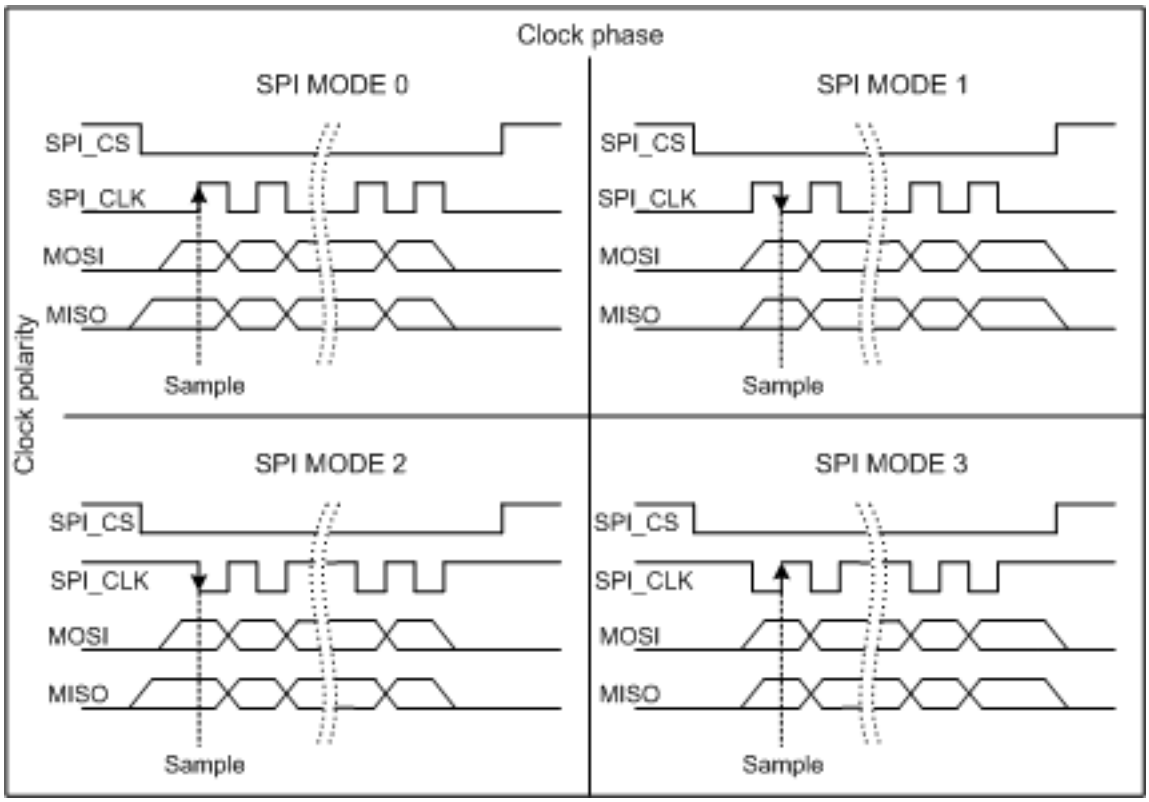

Figure 19.1: SPI modes selectable on SPI

19.7.2 Transmitting Data over AT Interface

This section provides information on the protocol used for data transmission to or from I²C /SPI devices and explains the data mode. It is assumed that you are familiar with the I²C specification.
Throughout this section the following document conventions are used to mark the direction of send and receive:
Transfer Message: AT → I²C or SPI device driver
Response Message: AT ← I²C or SPI device driver

Channel Open / Close:
To change from command mode to data mode use the AT^SSPI write command. To close down the channel and return to command mode send the ASCII code # (0x23).

ASCII Protocol for I²C or SPI communication over AT interface:
The protocol allows using a Terminal program for the communication between the module and the I²C slave device/SPI device. To visualize transferred characters and response data it is recommended to run the Terminal program in chat mode or to switch on local echo.
For transfer and response, special characters are defined, such as Start and Stop to mark a single message and Close to disconnect the data channel. All valid special characters are listed below:

Table 19.2: Special characters for ASCII coding

Direction AT - Driver	Function in protocol	Special character	Hex value	Description
→	Start Transfer Message	<	0x3C	Special character sent to the I²C/SPI driver to start sending.
→	Stop Transfer Message	>	0x3E	Special character sent to the I²C/SPI driver to stop sending.
→	Channel Close	#	0x23	For signalling. Channel Close can be sent any time inside or outside a transmit or receive message. Causes the transfer to be aborted and takes the ME back to AT command mode.
←	Start Response Message	{	0x7B	Special character sent to the I²C/SPI driver to mark the beginning of a Response Message.
←	Stop Response Message	}	0x7D	Special character sent to the I²C/SPI driver to mark the end of a Response Message.
←	Protocol error	!	0x21	For signalling. Reports to the AT interface that the Transfer Frame does not comply with the protocol definition (syntax error).
←	Transmission OK (in I²C protocol referred to as ACK)	+	0x2B	Notifies the AT interface that data were successfully transmitted or, on the I²C bus, the I²C Slave Address was recognized.
On I²C bus only:				
←	Transmission error (in I²C protocol referred to as NAK)	-	0x2D	Notifies the AT interface that data transmission failed or the I²C Slave Address was not recognized. On the I²C bus, the faulty data byte (16 bit byte counter) is identified as well.

Message syntax:
Each Message consists of a Start and Stop character, a Message-ID, further protocol data and user data. The notation of all elements is explained below:

Notation of Message-ID:

- All ASCII characters between 0x00...0x7F. It is recommended to use only the characters 0...9, A...Z, a...z.
- Length of the Message-ID: only one character

Notation of protocol data (except Message-ID) and user data:

- Hex (0...9, a...f, A...F)
- Without "0x" (0x01 → 01)
- Each hex value consists of 2 characters (1 → 01)
- Without delimiters such as comma, semicolon, space etc. (0xAE 0x01 0xA5 → AE01A5)
- In a Transfer Message, the number of all characters after the Message ID shall be even. If it is odd, a protocol error will be reported. On the I²C bus, this applies to the I²C Slave Address and all subsequent written user data. On the SPI this applies to the Read Offset Byte and the Read Length and, if available, all written user data. (Keep in mind that the number of all characters transmitted between Start "<" and Stop ">" of the Transfer Frame shall always be odd because the ID is one character only.)
- Length of I²C Slave Address and user data: ≤ 2048 bytes

The first element of each message is the Start character ("<" for Transfer, "{" for the Response). Accordingly, the last character of a message is the Stop character (">" for Transfer, "}" for the Response).

The second element of each message is the Message ID (1 character). The Message ID serves the user to distinguish between different messages. It is only relevant on protocol level (between AT interface and I²C device driver), i.e. it is not sent to the I²C slave device.

Each transfer to the device is followed by a Response Message sent from the driver to the AT interface. The response includes the Message ID and either OK ("+") or error characters ("-" or "!"). A successful response to a Read Message contains the OK character and the read data. If an error occurs on the I²C bus, the response consists of an error character followed by a 16 bit code specifying the faulty byte.

After each Transfer Message, wait for the Response Message before sending the next Transfer Message.

All characters entered outside a valid message (i.e. not input between Start character "<" and Stop character ">") are ignored.

19.7.2.1 Structure of Messages on the I²C Bus

Table 19.3: Structure of Transfer and Response Messages on the I²C bus

Frame	Format
Write Transfer Message	< *ID SlaveAddress Data* > Maximum length: 2048 bytes for I²C Slave Address and written data. LSB of I²C Slave Address = "0".
Read Transfer Message	< *ID SlaveAddress ReadLength* > Read Length ≤ 2048 bytes. LSB I²C of Slave Address = "1".
Response Message Write OK Read of x bytes OK NAK for x^{th} byte if Read or Write Protocol error in x^{th} byte	 {*ID* + } {*ID* + *Data* } {*ID* - *xxxx* } {*ID* ! *xxxx* }

On the I²C bus, read and write data are handled in two separate frames transmitted one after the other. This is because the I²C bus has only two bus lines, I2CDAT for the serial data and I2CCLK for the serial clock. Write data are packed into a Transfer Frame. Read data are packed into a Response Frame. The Transfer Frame con-

tains a Receive or Transmit Request (R/W Request) for the I²C master.

In a Transfer Message (Read or Write), the third element is the 7-bit I²C Slave Address (2 characters) that identifies each single device connected to the bus. The 8th bit of this byte is the LSB that determines the direction of the message. If the LSB is "0" the master will write information to the selected slave. If the LSB is "1" the master will read information sent from the slave.

In a Read Transfer Message on the I²C bus, the size of the expected data must be specified explicitly. This is an element of 4 characters stating the number of bytes to be read. It must be placed after the I²C Slave Address.

19.7.2.2 Structure of Messages on the SPI

Table 19.4: Structure of Transfer and Response Messages for SPI

Message	Format
Transfer Message	Read data:<*ID ReadOffset ReadLength*> Write data: <*ID Data*> Read and write data: <*ID ReadOffset ReadLength Data*> Read Offset = 8 bits Read Length = 16 bits Max. length of data: 2048 bytes
Response Message Write OK Reading x bytes was OK Protocol error in x^th byte	 {*ID* +} {*ID + Data* } {*ID ! xxxx* }

The SPI has two serial data lines, MOSI for sending data from the master to the slave, and MISO for receiving data sent from the slave to the master. Both data lines are controlled by one serial clock line SPI_CLK. EHS6-A acts as master providing the clock. Write and read data are handled in the same Transfer Messages and Response Messages. In a Transfer Message, the next two elements after the ID are the Read Offset and the Read Length, both required to enable reading data from the slave. The Read Offset specifies where to start reading, i.e. which byte is the first to start reading from. If the Read Offset is zero then reading starts from the first byte. The Read Length specifies the number of expected bytes. If the Read Offset is zero and the Read Length does not equal zero, the master reads the specified number of bytes, starting from the first byte. If the Read Length is zero, the Read Offset is ignored, meaning that the master will not read data from the slave. To transmit data from the master to the slave all data can be entered after the Read Length.

In a Response Message the ID is followed by a special character to indicate the result of reading. If successful, "+" is given, followed by the read data. If reading fails only "!" is received.

19.7.3 Error Handling on the I²C Bus

Protocol error:
If a protocol error is detected the ASCII value "!" is sent to the AT interface. Also, a Stop Condition is sent to the I²C device.
A protocol error occurs if

- any data / address characters do not equal 0...9, a...f and A...F
- the length of a read word is smaller or greater than 16 bits
- the number of ASCII data is odd (e.g. "af1" instead of "af01")
- the Read or Write request is greater than 2 KB (0x0800).

Acknowledge:
Once a transmission has completed successfully (Write or Read), the special character "+" (ACK) is included in the Response sent to the AT interface.
During a Write Transfer, the I²C driver acknowledges each transferred byte, but the Response contains only one

ACK which is transmitted only if all bytes are successfully transferred. During a Read Transfer, an ACK is sent when the I²C slave device notifies that it has recognized the I²C Slave Address.

Not Acknowledge:
During a Transmit Transfer, a NAK is given when the I²C Slave Device notifies a failure to receive either the I²C Slave Address or a data byte. In this case, a Stop Condition is sent to the I²C device.
During a Receive Transfer, a NAK is transmitted only when the I²C does not receive any reponse for the I²C Slave Address. The I²C device never acknowledges the validity of the received data (by sending an ACK the master acknowledges each received byte to the slave).

19.7.4 Example: Using I²C Bus

As stated above, it is recommended to run the Terminal program in chat mode or to use the local echo. First, activate the I²C interface:

AT^SSPI=0010,0000,0000 CONNECT	The first group of characters forms the <basicConfiguration>, where the first "0" sets I²C, the second "0" is the internal port, the digit "1" sets 400 kbps bit rate on the I²C bus, and the next "0" selects ASCII coding. Note: If omitted all above parameters are assumed by default. Therefore, instead of AT^SSPI=0010,0000,0000 it is sufficient to enter only AT^SSPI=

The module is in data mode now. This allows you to send a Write Transfer Message:

<aAE000102030405060708090A0B0C0D0E0F>	Write Transfer Frame, where a = ID, AE = Slave Address and write request.
{a+}	Write Response Message, where a = ID.
<bAF0010>	Read Transfer Message, where b = ID, AF = Slave Address and read request, 0010 = number of expected bytes.
{b+000102030405060708090A0B0C0D0E0F}	Read Response Message, where b = ID.

To quit data mode and return to command mode enter the Close character "#":

# OK	The response OK confirms that the ME is back to command mode and ready to accept any AT commands.

If the ME is in command mode, the response to the read command contains the factory settings.

AT^SSPI? ^SSPI: 0,0010,0000,0000 OK	The read command returns the connection state "not connected" (Channel closed) and the factory settings for I²C.

If the ME is in data mode, the response to the read command contains the current settings.

AT^SSPI? ^SSPI: 1,0010,0000,0000 OK	The read command returns the connection state "connected" (Channel open) and the current settings for I²C.

19.7.5 Example: Transfer and Response Messages on SPI

The following examples shall illustrate the message structure and write/read procedures explained in Section 19.7.2.2, Structure of Messages on the SPI. Blanks are inserted only to better visualize frame elements. In practice no blanks are allowed.

`<0 00 0000 11 22 33>`	Transfer Message: The master writes 3 bytes.
`{0 +}`	Response Message: Transmission successful.
`<1 00 0010>`	Transfer Message: The master requests to read 16 bytes from the slave. Read Offset is zero, therefore, reading starts from the first byte.
`{1 + 11 22 33 44 ... FF 00}`	Response Message: Reading data successful.
`<2 03 0008>`	Transfer Message: The master requests to read 8 bytes from the slave. Read Offset is 3, therefore, reading starts from the fourth byte.
`{2 + 44 55 66 77 88 99 AA BB}`	Response Message: Reading data successful.
`<3 03 0004 11 22 33 44 55 66>`	Transfer Message: The master writes 6 bytes and requests to read 4 bytes from the slave. Read Offset is 3, therefore, reading starts from the fourth byte.
`{3 + AA BB CC DD}`	Response Message: Reading and writing data successful.

19.8 AT^SWDAC PWM Signal Configuration for DAC

AT^SWDAC controls the PWM (Pulse Width Modulation) signals generated by means of the GPIO7/PWM1 line or GPIO6/PWM2 line of the EHS6-A module.
Settings will be stored non-volatile and take effect immediately. After power-up stored PWM settings will be loaded and take effect immediately without any further user interaction.
Before execution of AT^SWDAC write command take care that PWM functionality is enabled with AT^SCFG="Gpio/mode/PWM" with parameter "std".

Syntax

Test Command

```
AT^SWDAC=?
```

Response(s)

^SWDAC: (list of supported <ch>s), (list of supported <dc>s), (list of supported <oc>s), (list of supported <fq>s)
OK

Read Command

```
AT^SWDAC?
```

Response(s)

Current settings of first and second PWM channel:

```
^SWDAC: <ch>, <dc>, <oc>, <fq>
^SWDAC: <ch>, <dc>, <oc>, <fq>
OK
ERROR
+CME ERROR: <err>
```

Write Command

```
AT^SWDAC=<ch>, <dc>[, <oc>[, <fq>]]
```

Response(s)

```
OK
ERROR
+CME ERROR: <err>
```

PIN	✈	Last
-	+	-

Parameter Description

<ch>(num)

Select PWM channel

0	First PWM channel (GPIO7 at EHS6-A module)
1	Second PWM channel (GPIO6 at EHS6-A module)

<dc>(num)(NV)

Duty cycle in percentage steps

0(D)...100

<oc>(num)(NV)	
Open or close DAC	
0(D)	Close DAC
1	Open DAC

<fq>(num)(NV)	
PWM frequency	
0(D)	400 Hz (accuracy of 1 percentage step)
1	1000 Hz (accuracy of 3 percentage steps)
2	8,125 Hz (accuracy of 1 percentage step)
3	16,250 Hz (accuracy of 1 percentage step)
4	32,500 Hz (accuracy of 1 percentage step)
5	65,000 Hz (accuracy of 2 percentage steps)

Example

This example shows how to open the GPIO7/PWM1 output and change the duty cycle while using the same frequency.

`AT^SWDAC=0,50,1,2`	Initial opening of GPIO7/PWM1, while setting PWM signal to 8,125 Hz at 50% duty cycle.
`OK`	
`AT^SWDAC=0,75`	Change duty cycle of the open GPIO7/PWM1 output.
`OK`	
`AT^SWDAC=0,80`	Change duty cycle of the open GPIO7/PWM1 output.
`OK`	
`AT^SWDAC=0,0,0`	Close GPIO7/PWM1 output.
`OK`	

20. General Purpose I/O (GPIO) Pin related Commands

This chapter describes the AT commands used to access and configure the GPIO pins of EHS6-A.

Please also refer to [2] for electrical specifications of the GPIO pins.

20.1 AT^SCPIN Pin Configuration

The AT^SCPIN write command serves to add (or remove) and configure GPIO lines. Keep in mind that some GPIO lines share functions with other interfaces. For details see AT^SCFG "GPIO/mode/xxx" settings, Section 20.1.1, GPIO Configuration Table and following AT commands: AT^SLED, AT^SCCNT, AT^SWDAC, AT^SSPI, AT^SCFG "MEShutdown/Fso".

Syntax

Test Command

AT^SCPIN=?

Response(s)

^SCPIN: (list of supported <mode>s), (list of supported <pin_id>s), (list of supported <direction>s), (list of supported <startValue>s)
OK

Write Command

AT^SCPIN=<mode>, <pin_id>, <direction>[, <startValue>]

Response(s)

OK
ERROR
+CME ERROR: <err>

PIN	✈	Last
-	+	-

Parameter Description

<mode>(num)

0	Close GPIO line
1	Open GPIO line

<pin_id>(num)

Pin identifier

0	GPIO1
1	GPIO2
2	GPIO3
3	GPIO4
4	GPIO5
5	GPIO6
6	GPIO7
7	GPIO8

10	GPIO11
11	GPIO12
12	GPIO13
13	GPIO14
14	GPIO15
15	GPIO16
16	GPIO17
17	GPIO18
18	GPIO19
19	GPIO20
20	GPIO21
21	GPIO22
22	GPIO23
23	GPIO24

`<direction>`(num)

Parameter `<direction>` is mandatory when opening a GPIO line, but can be omitted when closing a GPIO line.

0	Input
1	Output

`<startValue>`(num)

Can be set only for outputs.

[0]	Low
1	High

Notes

- For closing a GPIO line with the write command (`<mode>`=0), the parameter `<direction>` is not needed.
- Before changing the configuration of a GPIO line be sure to close the GPIO line.

20.1.1 GPIO Configuration Table

Some GPIO lines are shared with other interfaces, such as ASC1, DAI (Digital Audio Interface), Fast Shutdown line, Pulse Counter, SPI (Serial Peripheral Interface), PWM (Pulse Width Modulation) interfaces and a status LED. The following table shows the configuration variants. All variants are mutually exclusive, i.e. a line configured for GPIO usage is locked for alternative use and vice versa.

GPIO Pin	GPIO Handler	Status LED	PWM	Pulse Counter	ASC0	ASC1	DAI	Fast Shut-down	SPI	HSIC
GPIO1	yes	no	no	no	yes	no	no	no	no	no
GPIO2	yes	no	no	no	yes	no	no	no	no	no
GPIO3	yes	no	no	no	yes	no	no	no	yes	no
GPIO4	yes	no	no	no	no	no	no	yes	no	no
GPIO5	yes	yes	no	no	no	no	no	no	no	no

GPIO Pin	GPIO Handler	Status LED	PWM	Pulse Counter	ASC0	ASC1	DAI	Fast Shut-down	SPI	HSIC
GPIO6	yes	no	yes	no	no	no	no	no	no	no
GPIO7	yes	no	yes	no	no	no	no	no	no	no
GPIO8	yes	no	no	yes	no	no	no	no	no	no
GPIO11	yes	no	no	no	no	no	no	no	no	no
GPIO12	yes	no	no	no	no	no	no	no	no	no
GPIO13	yes	no	no	no	no	no	no	no	no	no
GPIO14	yes	no	no	no	no	no	no	no	no	no
GPIO15	yes	no	no	no	no	no	no	no	no	no
GPIO16	yes	no	no	no	no	yes	no	no	yes	yes
GPIO17	yes	no	no	no	no	yes	no	no	yes	yes
GPIO18	yes	no	no	no	no	yes	no	no	no	yes
GPIO19	yes	no	no	no	no	yes	no	no	yes	yes
GPIO20	yes	no	no	no	no	no	yes	no	no	no
GPIO21	yes	no	no	no	no	no	yes	no	no	no
GPIO22	yes	no	no	no	no	no	yes	no	no	no
GPIO23	yes	no	no	no	no	no	yes	no	no	no
GPIO24	yes	no	no	no	yes	no	no	no	no	no

20.2 AT^SGIO Get IO state of a specified pin or port

Syntax

Test Command

`AT^SGIO=?`

Response(s)

`^SGIO:` (list of supported `<io_id>`s)
`OK`

Write Command

`AT^SGIO=<io_id>`

Response(s)

`^SGIO: <value>`
`OK`
`ERROR`
`+CME ERROR: <err>`

PIN	✈	Last
-	+	-

Parameter Description

`<io_id>`(num)

This is an already configured `<pin_id>`.

`<value>`(num)

State read on this `<io_id>`.

0	Low for `<pin_id>`
1	High for `<pin_id>`

20.3 AT^SSIO Set IO state of a specified pin or port

Syntax

Test Command

`AT^SSIO=?`

Response(s)

`^SSIO:` (list of supported `<io_id>`s), (list of supported `<value>`s)
`OK`

Write Command

`AT^SSIO=<io_id>, <value>`

Response(s)

`OK`
`ERROR`
`+CME ERROR: <err>`

PIN	✈	Last
-	+	-

Parameter Description

`<io_id>`(num)

This is an already configured `<pin_id>`.

`<value>`(num)

State to be set for this `<io_id>`.

0	Low for `<pin_id>`
1	High for `<pin_id>`

20.4 AT^SCPOL Polling Configuration

The AT^SCPOL write command serves to start and stop polling a pin specified with <io_id>. The pin must already be configured via AT^SCPIN. Polling is only applicable to input pins.

After polling has been activated on a specified pin or port, all new values related to this pin or port will be reported via the "^SCPOL" URC.

Syntax

Test Command

AT^SCPOL=?

Response(s)

^SCPOL: (list of supported <mode>s), (list of supported <io_id>s)
OK

Write Command

AT^SCPOL=<mode>, <io_id>

Response(s)

OK
ERROR
+CME ERROR: <err>

PIN	✈	Last
-	+	-

Unsolicited Result Code

^SCPOL: <io_id>, <value>

Parameter Description

<mode>(num)

0	Suppress polling
1	Activate polling

<io_id>(num)

This is an already configured <pin_id>.

<value>(num)

New value on this <io_id>.

0	Low for <pin_id>
1	High for <pin_id>

Note

- The pins will be polled every 5 ms.

20.5 AT^SSCNT Start and Stop Pulse Counter

The AT^SSCNT write command serves to read, start, restart and stop the pulse counter.

Syntax

Test Command

AT^SSCNT=?

Response(s)

^SSCNT:(list of supported <action>s)
OK

Read Command

AT^SSCNT?

Response(s)

^SSCNT: <action>
OK
If an error occurs:
ERROR
+CME ERROR: <err>

Write Command

AT^SSCNT=<action>

Response(s)

If <action>=0 or 1:
OK
If <action>=2 or 3:
OK
"^SSCNT" URC with parameter <pulse>
If an error occurs:
ERROR
+CME ERROR: <err>

PIN	✈	Last
-	+	-

Unsolicited Result Code

^SSCNT: <pulse>

The URC applies only to the Start-Stop mode set with AT^SCCNT, parameter <mode>=0. It is delivered once the pulse counter result was requested with <action>=2 or the pulse counter was stopped with <action>=3. The URC indicates the number of pulses counted.

Parameter Description

<action>(num)

This parameter can only be used after configuring the pulse counter with AT^SCCNT. The <action> types 0, 1 and 2 apply only to the Start-Stop counter mode set with AT^SCCNT.

0	Reset and start pulse counter from 0.
1	Restart pulse counter and continue counting from the <pulse> value of the last run.
2	Read out current <pulse> value.

3	The effect of value 3 depends on the selected counter mode: If AT^SCCNT, parameter <mode>= 0 (Start-Stop counter mode), then <action> type 3 stops the pulse counter and displays, as "^SSCNT" URC, the number of pulses counted until this time. If AT^SCCNT, parameter <mode>= 1 (Limit counter mode), then <action> type 3 immediately stops the pulse counter without indicating the "^SCCNT" URC. This action has the same effect as the command AT^SCCNT=0,0.

<pulse>(num)

Measurement result of the pulse counter in Start-Stop mode, indicated within the "^SSCNT" URC, if AT^SCCNT, parameter <action>=2 or 3. The value range of <pulse> is 32 bits (2^{31}-1).

0...2147483647	Number of pulses counted.

Note

- Measurement accuracy: In Start-Stop mode, take care that pulse transmission begins after the start command (AT^SSCNT=0 or 1) has returned OK and ends before the stop command (AT^SSCNT=3) is issued. Nevertheless, up to 4 pulses (depending on pulse frequency) may be lost when <action>=2 (read) or 3 (stop) is sent within less than 15ms after the last pulse occurred.

20.5.1 Using the Pulse Counter in Start-Stop Counter Mode

at^sccnt=1,0	Open pulse counter and enable Start-Stop counter mode.
OK	
at^sscnt=0	Reset and start pulse counter from 0.
OK	
at^sscnt=2	Request value.
OK	
^SSCNT: 3254	"^SSCNT" URC indicates number of pulses counted.
at^sscnt=2	Request value.
OK	
^SSCNT: 10024	"^SSCNT" URC indicates number of pulses counted.
at^sscnt=2	Request value.
OK	
^SSCNT: 15134	"^SSCNT" URC indicates number of pulses counted.
at^sscnt=3	Request value and stop pulse counter.
OK	
^SSCNT: 21020	"^SSCNT" URC indicates number of pulses counted until this time.
at^sscnt=2	Request value.
OK	
^SSCNT: 21020	"^SSCNT" URC still indicates the count of the last run.
at^sscnt=1	Restart pulse counter at the value of the last run.
OK	
at^sscnt=2	Request value.
^SSCNT: 22123	"^SSCNT" URC indicates number of pulses incremented from the last run.

20.6 AT^SCCNT Configure Pulse Counter

The AT^SCCNT write command serves to configure the GPIO8 pin as pulse counter. The pulse counter is designed to measure signals from 0 to 1000 pulses per second. The measurement starts within <50ms after the OK result code has been sent. If the pulse counter is controlled from Java this delay may, in rare cases and depending on the system load, be longer.

Before execution of the AT^SCCNT write command take care that Pulse Counter functionality is enabled with AT^SCFG="Gpio/mode/PULSE" set to "std". Remember that if the GPIO8 line is configured as GPIO (see AT^SCPIN) any attempt to activate the pulse counter will be rejected. Vice versa, if the pulse counter is opened the GPIO8 line cannot be configured as GPIO.

See also [2] for further detail on the pulse counter.

Syntax

Test Command

```
AT^SCCNT=?
```

Response(s)

```
^SCCNT:(list of supported <action>s), (list of supported <mode>s), (list of supported <limit>s)
OK
```

Read Command

```
AT^SCCNT?
```

Response(s)

```
^SCCNT: <action>, <mode>[, <limit>]
OK
ERROR
+CME ERROR: <err>
```

Write Command

```
AT^SCCNT=<action>, <mode>[, <limit>]
```

Response(s)

```
OK
ERROR
+CME ERROR: <err>
```

PIN	✈	Last
-	+	-

Unsolicited Result Code

```
^SCCNT: <time>
```

The URC applies only to the Limit counter mode set with parameter <mode>=1. It is delivered once the pulse counter has completed counting the number of pulses requested with parameter <limit>.

Parameter Description

<action>(num)	
0	Close pulse counter
1	Open pulse counter

<mode>(num)	
0	Activates the Start-Stop counter mode. After setting this mode, use AT^SSCNT and the <action> parameter to start or stop the pulse counter or to read out the measured pulses.
1	Activates the Limit counter mode and immediately starts the pulse counter. Parameter <limit> is mandatory for this mode.

<limit>(num)	
1...65534	Number of pulses to be counted. Parameter <limit> applies only to the Limit counter mode and is mandatory for this mode. Once the given number of pulses is reached, the ME sends one single URC "^SCCNT" which indicates the parameter <time>.

<time>(num)	
1...2147483645	Time (in milliseconds) taken to count the number of pulses specified with <limit>. Measurement accuracy: The parameter <time> implies an inaccuracy <5ms which needs to be taken into account in addition to the measurement start-up time mentioned above.

20.6.1 Using the Pulse Counter in Limit Counter Mode

This example assumes that a 1 kHz frequency is applied at the GPIO8 pin. Limit counter mode is enabled to request the time the pulse counter needs to count a specified number of pulses.

at^sccnt=1,1,1000	Open pulse counter, enable Limit counter mode, request the time needed to count 1000 pulses.
OK	
^SCCNT: 1047	"^SCCNT" URC indicates the time taken to count 1000 pulses.
at^sccnt=1,1,2000	Open pulse counter, enable Limit counter mode, request the time needed to count 2000 pulses.
OK	
^SCCNT: 2040	"^SCCNT" URC indicates the time taken to count 2000 pulses.
at^sccnt=1,1,10000	Open pulse counter, enable Limit counter mode, request the time needed to count 10000 pulses.
OK	
^SCCNT: 10043	"^SCCNT" URC indicates the time taken to count 10000 pulses.
at^sccnt=1,1,20000	Open pulse counter, enable Limit counter mode, request the time needed to count 20000 pulses.
OK	
^SCCNT: 20040	"^SCCNT" URC indicates the time taken to count 20000 pulses.

This example shows how to stop the Limit counter mode and close the pulse counter without waiting for the "^SCCNT" URC.

at^sccnt=0,0	Stop and close the pulse counter immediately, without "^SCCNT" URC being indicated.
OK	

20.7 AT^SPIO GPIO Driver Open/Close

AT^SPIO is implemented for compatibility reasons only, and has no effect.

Syntax

Test Command

AT^SPIO=?

Response(s)

^SPIO:(list of supported <mode>s)
OK

Write Command

AT^SPIO=<mode>

Response(s)

OK
ERROR
+CME ERROR: <err>

PIN	✈	Last
-	+	-

Parameter Description

<mode>(num)	
0	Close General purpose I/O driver
1	Open General purpose I/O driver

21. Appendix

21.1 Restricted access to SIM data after SIM PIN authentication

The following commands can be used only after data from the SIM have been read successfully for the first time. Reading starts after successful SIM authentication has been performed, and may take up to 30 seconds depending on the SIM used. While the read process is in progress, an attempt to use any of the following commands will result in "+CME Error: 14" (SIM busy).

ø ... AT Command not available
- ... AT command accessible immediately after PIN entry has returned OK
+ ... AT command fully accessible after SIM PIN authentication has been completed

AT Command	Exec	Test	Read	Write
AT+CMGL	+	-	ø	+
AT^SMGL	+	-	ø	+
AT+CMGR	ø	-	ø	+
AT^SMGR	ø	-	ø	+
AT+CSCA	ø	-	+	-
AT+CPBR	ø	+	ø	+
AT+CPBW	ø	+	ø	+
AT+CPBS	ø	+	+	+
ATD><mem><n>	+	ø	ø	ø

21.2 Star-Hash (*#) Network Commands

The following command strings can be sent by using ATD. The command strings are defined with 3GPP TS 22.030 [25].

Table 21.1: Star-Hash (*#) Command Overview

Star-Hash Code	Functionality	Response, also refer to Table 21.3
Phone Security		
*#06#	Query IMEI	<IMEI> OK
**04[2]*oldPin[2]*newPin[2]*new-Pin[2]#	Change SIM pwd	+CME ERROR: <err> / OK
**05[2]*unblKey[2]*newPin[2]*new-Pin[2]#	Change/Unblocking SIM pwd	+CME ERROR: <err> / OK
[*]03[ZZ]*oldPw*newPw*newPw#	Registration of net password	+CME ERROR: <err> / OK
Phone number presentation		
*#30#	Check status of CLIP (Calling Line Identification Presentation)	+CLIP : <n>,<m> OK (see AT+CLIP)
*#31#	Check status of CLIR (Calling Line Identification Restriction)	+CLIR : <n>,<m> OK (see AT+CLIR)
*31#<Phonenumber>[;]	Suppress CLIR	(see AT+CLIR)
#31#<Phonenumber>[;]	Activate CLIR	(see AT+CLIR)
*#76#	Check status of COLP (Connected Line Identification Presentation)	+COLP : <n>,<m> OK (see: AT+COLP)
Call forwarding		
(choice of *,#,*#,**,##)21*DN*BS#	Act/deact/int/reg/eras CFU	^SCCFC : <reason>, <status>, <class> [,...] like +CCFC *) (see: AT+CCFC)
(choice of *,#,*#,**,##)67*DN*BS#	Act/deact/int/reg/eras CF busy	see above
(choice of *,#,*#,**,##)61*DN*BS*T#	Act/deact/int/reg/eras CF no reply	see above
(choice of *,#,*#,**,##)62*DN*BS#	Act/deact/int/reg/eras CF no reach	see above
(choice of *,#,*#,**,##)002*DN*BS*T#	Act/deact/int/reg/eras CF all	see above
(choice of *,#,*#,**,##)004*DN*BS*T#	Act/deact/int/reg/eras CF all cond.	see above
Call waiting		
(choice of *,#,*#)43*BS#	Activation/deactivation/int WAIT	+CCWA : <status>, <class> [,...] like +CCWA (see AT+CCWA)
Call barring		
(choice of *,#,*#)33*Pw*BS#	Act/deact/int BAOC	^SCLCK : <fac>, <status>, <class> [, ...] like +CLCK *) (Refer to AT+CLCK)
(choice of *,#,*#)331*Pw*BS#	Act/deact/int BAOIC	see above
(choice of *,#,*#)332*Pw*BS#	Act/deact/int BAOIC exc.home	see above

Star-Hash Code	Functionality	Response, also refer to Table 21.3
(choice of *,#,*#)35*Pw*BS#	Act/deact/int. BAIC	see above
(choice of *,#,*#)351*Pw*BS#	Act/deact/int BAIC roaming	see above
#330*Pw*BS#	Deact. All Barring Services	see above
#333*Pw*BS#	Deact. All Outg.Barring Services	see above
#353*Pw*BS#	Deact. All Inc.Barring Services	see above
Call Hold / Multiparty		
C[C] in call	Call hold and multiparty	+CME ERROR: <err> / OK
USSD messages		
[C]...[C]#	Send USSD message	+CME ERROR: <err> / OK
C[C] (excluded 1[C])	Send USSD message	+CME ERROR: <err> / OK

*) Notes on ^SCCFC, +CCWA, ^SCLCK: The output depends on the affected basic service of the Star-Hash code. One line will be output for every tele- or bearer service coded in basic service code BS.
^SCCFC and ^SCLCK are modified by giving an additional <reason> or <fac> in front of the regular output string generated by the standard commands +CCFC and +CLCK.

Table 21.2: Abbreviations of Codes and Parameters used in Table 21.1

Abbreviation	Meaning	Value
ZZ	Type of supplementary services: Barring services All services	 330 Not specified
DN	Dialing number	String of digits 0-9
BS	Basic service equivalent to parameter class: Voice FAX SMS SMS+FAX Data circuit asynchron Data circuit synchron dedicated PAD access dedicated Packet access Data circuit asynchron+PAD Data circuit synchron+Packet Data circuit asynchron+synchron+Packet+PAD All Services	 11 13 16 12 25 24 27 26 21 22 20 --
T	Time in seconds	In contrast to AT+CCFC, parameter T has no default value. If T is not specified, an operator defined default or the last known value may be used, depending on the network operator.
PW	Password	--
C	Character of TE character set (e.g. asterisk, hash or digit in case of USSD, or digits in case of held calls or multiparty calls)	--

Table 21.3: Star-Hash Command Response Parameters

Parameter	Meaning
<m>	Mode: 0 = not active, 1 = active
<n>	Unsolicited result code: 0 = presentation disabled, 1 = presentation enabled

Parameter	Meaning
<status>	Status: 0 = not active, 1 = active
<class>	Represents BS = basic service, refer to AT+CCFC, AT+CLCK
<fac>	Facility lock, refer to AT+CLCK
<reason>	Call forwarding reason

For exact specification of format and parameters for Star-Hash commands refer to Table 3.2 of 3GPP TS 22.004 [24], and Annex C of of 3GPP TS 22.030 [25].

Table 21.4: Star-Hash Commands for Supplementary Services

Star-Hash Code	Abbreviations in Table 21.1	Functionality
*	act	Activate (except for CLIR, see list above)
**	reg	Register and activate
*#	int	Check status (interrogate)
#	deact	Deactivate (except for CLIR, see list above)
##	eras	Unregister and deactivate

21.3 Available AT Commands and Dependency on SIM PIN

ø ... Command not available
- ... Command does not require PIN1
+ ... Command requires PIN1
± ... Command sometimes requires PIN1

Table 21.5: Available AT Commands and Dependency on SIM PIN

AT Command	Exec	Test	Read	Write
Configuration Commands				
AT&F	-	ø	ø	ø
AT&V	-	ø	ø	ø
AT&W	-	ø	ø	ø
ATQ	-	ø	ø	ø
ATV	-	ø	ø	ø
ATX	-	ø	ø	ø
ATZ	-	ø	ø	ø
AT+CFUN	ø	-	-	-
AT^SMSO	-	-	ø	ø
AT+CMEE	ø	-	-	-
AT+CSCS	ø	-	-	-
AT^SCFG	ø	-	-	-
AT^SPOW	ø	-	-	-
Status Control Commands				
AT+CEER	-	-	ø	-
AT^SIND	ø	-	-	-
AT+CPAS	-	-	ø	ø
Serial Interface Control Commands				
AT\Q	-	ø	ø	ø
AT&C	-	ø	ø	ø
AT&D	-	ø	ø	ø
AT&S	-	ø	ø	ø
ATE	-	ø	ø	ø
AT+ICF	ø	-	-	-
AT+IPR	ø	-	-	-
AT+CMUX	ø	-	-	-
Identification Commands				
ATI	-	ø	ø	ø
AT+CGMI	-	-	ø	ø
AT+CGMM	-	-	ø	ø
AT+CGMR	-	-	ø	ø

AT Command	Exec	Test	Read	Write
AT+CGSN	-	-	Ø	Ø
AT+GSN	-	-	Ø	Ø
AT+CIMI	+	+	Ø	Ø
Security Commands				
AT+CPIN	Ø	-	-	-
AT+CPIN2	Ø	-	-	-
AT+CLCK	Ø	-	Ø	-
AT+CPWD	Ø	+	Ø	+
Call related Commands				
ATA	+	Ø	Ø	Ø
ATD	±	Ø	Ø	Ø
ATD><mem><n>	+	Ø	Ø	Ø
ATD><n>	+	Ø	Ø	Ø
ATD><str>	+	Ø	Ø	Ø
ATDL	+	Ø	Ø	Ø
ATH	-	Ø	Ø	Ø
AT+CHUP	+	+	Ø	Ø
AT^SHUP	Ø	+	Ø	+
ATS0	Ø	Ø	-	+
ATO	-	Ø	Ø	Ø
+++	-	Ø	Ø	Ø
AT+CBST	Ø	-	-	-
AT+CSTA	Ø	-	-	-
AT+CRLP	Ø	-	-	-
AT+CLCC	+	+	Ø	Ø
AT^SXCALLSTAT	Ø	+	+	+
AT+CR	Ø	+	+	+
AT+CRC	Ø	-	-	-
AT+CECALL	Ø	-	-	-
ATS6	Ø	Ø	-	-
ATS7	Ø	Ø	-	-
ATS8	Ø	Ø	-	-
ATS10	Ø	Ø	-	-
Network Service Commands				
AT+COPN	+	+	Ø	Ø
AT+COPS	Ø	±	±	±
AT^SXRAT	Ø	-	-	-
AT^SXEONS	+	+	Ø	Ø
AT+CREG	Ø	-	-	-
AT+CSQ	-	-	Ø	Ø

AT Command	Exec	Test	Read	Write
AT+CPOL	Ø	+	+	+
AT+CPLS	Ø	+	+	+
AT+CTZR	Ø	-	-	-
AT+CTZU	Ø	-	-	-
AT^SGCOPS	Ø	Ø	±	±
AT^SMONI	-	-	Ø	-
AT^SMONP	-	-	Ø	-
AT^SNMON	Ø	-	Ø	-
Supplementary Service Commands				
AT+CACM	Ø	+	+	+
AT+CAMM	Ø	+	+	+
AT+CAOC	+	+	+	+
AT+CCUG	Ø	+	+	+
AT+CCFC	Ø	+	Ø	+
AT+CCWA	Ø	+	+	+
AT+CHLD	Ø	+	Ø	+
AT+CLIP	Ø	-	+	-
AT+CLIR	Ø	+	+	+
AT+COLP	Ø	+	+	+
AT+CNAP	Ø	-	+	-
AT+CPUC	Ø	+	+	+
AT+CSSN	Ø	-	-	-
AT+CUSD	Ø	+	+	+
Internet Service Commands				
AT^SICS	Ø	-	-	-
AT^SICI	Ø	-	-	-
AT^SIPS	Ø	-	Ø	-
AT^SISS	Ø	-	-	-
AT^SISI	Ø	-	-	-
AT^SISO	Ø	-	-	+
AT^SISC	Ø	-	Ø	+
AT^SISR	Ø	-	Ø	+
AT^SISW	Ø	-	Ø	+
AT^SIST	Ø	±	Ø	±
AT^SISH	Ø	-	Ø	-
AT^SISX	Ø	+	Ø	+
AT^SISE	Ø	-	Ø	-
Packet Domain Related Commands				
AT+CGACT	Ø	+	+	+
AT+CGANS	Ø	+	Ø	+

AT Command	Exec	Test	Read	Write
AT+CGATT	Ø	+	+	+
AT+CGAUTO	Ø	+	+	+
AT+CGDATA	Ø	+	Ø	+
AT+CGDCONT	Ø	+	+	+
AT+CGCMOD	Ø	+	Ø	+
AT+CGEQMIN	Ø	+	+	+
AT+CGEQREQ	Ø	+	+	+
AT+CGEREP	Ø	+	+	+
AT+CGPADDR	+	+	Ø	+
AT+CGQMIN	Ø	+	+	+
AT+CGQREQ	Ø	+	+	+
AT+CGREG	Ø	+	+	+
AT+CGSMS	Ø	+	+	+
ATA	+	Ø	Ø	Ø
ATD*99#	+	Ø	Ø	Ø
AT^SGAUTH	Ø	-	-	-
AT^SGCONF	Ø	-	-	-
Short Message Service (SMS) Commands				
AT+CMGC	Ø	+	Ø	+
AT+CMGD	Ø	+	Ø	+
AT+CMGF	Ø	-	-	-
AT+CMGL	+	+	Ø	+
AT+CMGR	Ø	+	Ø	+
AT+CMGS	Ø	+	Ø	+
AT+CMGW	+	+	Ø	+
AT+CMMS	Ø	+	+	+
AT+CMSS	Ø	+	Ø	+
AT+CNMA	+	+	Ø	+
AT+CNMI	Ø	+	+	+
AT+CPMS	Ø	+	+	+
AT+CSCA	Ø	+	+	+
AT+CSCB	Ø	+	+	+
AT+CSDH	Ø	-	-	-
AT+CSMP	Ø	+	+	+
AT+CSMS	Ø	+	+	+
AT^SMGL	+	+	Ø	+
AT^SMGR	Ø	+	Ø	+
USIM related Commands				
AT+CCID	-	-	-	Ø
AT+CRSM	Ø	-	Ø	-

AT Command	Exec	Test	Read	Write
AT+CSIM	Ø	-	Ø	-
USIM Application Toolkit (USAT) Commands				
AT^SSTA	Ø	-	-	-
AT+STKPRO	Ø	-	Ø	Ø
AT+STKTR	Ø	±	Ø	±
AT+STKENV	Ø	±	Ø	±
AT+STKCC	Ø	Ø	Ø	Ø
AT+STKCNF	Ø	Ø	Ø	Ø
Phonebook Commands				
AT+CNUM	+	+	Ø	Ø
AT+CPBR	Ø	+	Ø	+
AT+CPBS	Ø	+	+	+
AT+CPBW	Ø	+	Ø	+
AT+CPBF	Ø	+	Ø	+
AT+CSVM	Ø	+	+	+
Audio Commands				
ATL	-	Ø	Ø	Ø
AT+CMUT	Ø	±	±	±
AT+VTD	Ø	-	-	-
AT+VTS	Ø	-	Ø	-
AT^SAIC	Ø	-	-	-
AT^SNFI	Ø	-	-	-
AT^SNFM	Ø	-	-	-
AT^SNFO	Ø	-	-	-
AT^SNFS	Ø	-	-	-
AT^SNFTTY	Ø	-	-	-
AT^SRTC	-	-	-	-
AT^SAFH	Ø	-	-	-
Java related Commands				
AT^SJAM	Ø	-	Ø	-
AT^SJDL	Ø	-	-	-
AT^SJMSEC	Ø	-	-	-
AT^SJNET	Ø	+	+	+
AT^SJOTAP	+	+	+	+
AT^SJRA	Ø	-	Ø	-
Miscellaneous Commands				
A/	-	Ø	Ø	Ø
ATS3	Ø	Ø	-	-

AT Command	Exec	Test	Read	Write
ATS4	Ø	Ø	-	-
ATS5	Ø	Ø	-	-
AT^SFDL	-	Ø	Ø	-
AT^SFSA	Ø	-	Ø	-
Hardware related Commands				
AT+CCLK	Ø	-	-	-
AT+CALA	Ø	-	-	-
AT^SBV	-	-	Ø	Ø
AT^SCTM	Ø	-	-	-
AT^SLED	Ø	-	-	-
AT^SRADC	Ø	-	-	-
AT^SSPI	Ø	-	-	-
AT^SWDAC	Ø	-	-	-
General Purpose I/O (GPIO) Pin related Commands				
AT^SCPIN	Ø	-	Ø	-
AT^SGIO	Ø	-	Ø	-
AT^SSIO	Ø	-	Ø	-
AT^SCPOL	Ø	-	Ø	-
AT^SSCNT	Ø	-	-	-
AT^SCCNT	Ø	-	-	-
AT^SPIO	Ø	-	Ø	-

21.4 Availability of AT Commands Depending on Operating Mode of ME

- ... AT command not supported
+ ... AT command supported
± ... AT command partially supported
See description of AT command for details.

Table 21.6: Availability of AT Commands Depending on Operating Mode of ME

AT Command	Normal Mode	✈
Configuration Commands		
AT&F	+	+
AT&V	+	+
AT&W	+	+
ATQ	+	+
ATV	+	+
ATX	+	+
ATZ	+	+
AT+CFUN	+	+
AT^SMSO	+	+
AT+CMEE	+	+
AT+CSCS	+	+
AT^SCFG	+	±
AT^SPOW	+	+
Status Control Commands		
AT+CEER	+	+
AT^SIND	+	+
AT+CPAS	+	+
Serial Interface Control Commands		
AT\Q	+	+
AT&C	+	+
AT&D	+	+
AT&S	+	+
ATE	+	+
AT+ICF	+	+
AT+IPR	+	+
AT+CMUX	+	+
Identification Commands		
ATI	+	+
AT+CGMI	+	+
AT+CGMM	+	+
AT+CGMR	+	+

AT Command	Normal Mode	✈
AT+CGSN	+	+
AT+GSN	+	+
AT+CIMI	+	+
Security Commands		
AT+CPIN	+	+
AT+CPIN2	+	+
AT+CLCK	+	±
AT+CPWD	+	±
Call related Commands		
ATA	+	-
ATD	+	-
ATD><mem><n>	+	-
ATD><n>	+	-
ATD><str>	+	-
ATDL	+	-
ATH	+	-
AT+CHUP	+	-
AT^SHUP	+	-
ATS0	+	-
ATO	+	-
+++	+	+
AT+CBST	+	+
AT+CSTA	+	+
AT+CRLP	+	+
AT+CLCC	+	-
AT^SXCALLSTAT	+	-
AT+CR	+	+
AT+CRC	+	+
AT+CECALL	+	-
ATS6	+	+
ATS7	+	+
ATS8	+	+
ATS10	+	+
Network Service Commands		
AT+COPN	+	+
AT+COPS	+	-
AT^SXRAT	+	±
AT^SXEONS	+	-
AT+CREG	+	+

AT Command	Normal Mode	✈
AT+CSQ	+	+
AT+CPOL	+	+
AT+CPLS	+	-
AT+CTZR	+	+
AT+CTZU	+	+
AT^SGCOPS	+	-
AT^SMONI	+	-
AT^SMONP	+	-
AT^SNMON	+	-
Supplementary Service Commands		
AT+CACM	+	+
AT+CAMM	+	+
AT+CAOC	+	+
AT+CCUG	+	+
AT+CCFC	+	±
AT+CCWA	+	-
AT+CHLD	+	-
AT+CLIP	+	-
AT+CLIR	+	-
AT+COLP	+	-
AT+CNAP	+	-
AT+CPUC	+	+
AT+CSSN	+	-
AT+CUSD	+	-
Internet Service Commands		
AT^SICS	+	+
AT^SICI	+	-
AT^SIPS	+	+
AT^SISS	+	+
AT^SISI	+	+
AT^SISO	+	-
AT^SISC	+	-
AT^SISR	+	-
AT^SISW	+	-
AT^SIST	+	-
AT^SISH	+	-
AT^SISX	+	-
AT^SISE	+	-

AT Command	Normal Mode	✈
Packet Domain Related Commands		
AT+CGACT	+	+
AT+CGANS	+	-
AT+CGATT	+	-
AT+CGAUTO	+	-
AT+CGDATA	+	-
AT+CGDCONT	+	+
AT+CGCMOD	+	-
AT+CGEQMIN	+	+
AT+CGEQREQ	+	+
AT+CGEREP	+	+
AT+CGPADDR	+	+
AT+CGQMIN	+	+
AT+CGQREQ	+	+
AT+CGREG	+	+
AT+CGSMS	+	+
ATA	+	-
ATD*99#	+	-
AT^SGAUTH	+	+
AT^SGCONF	+	+
Short Message Service (SMS) Commands		
AT+CMGC	+	-
AT+CMGD	+	+
AT+CMGF	+	+
AT+CMGL	+	+
AT+CMGR	+	+
AT+CMGS	+	-
AT+CMGW	+	+
AT+CMMS	+	+
AT+CMSS	+	-
AT+CNMA	+	-
AT+CNMI	+	+
AT+CPMS	+	+
AT+CSCA	+	+
AT+CSCB	+	+
AT+CSDH	+	+
AT+CSMP	+	+
AT+CSMS	+	+
AT^SMGL	+	+
AT^SMGR	+	+

AT Command	Normal Mode	✈
USIM related Commands		
AT+CCID	+	+
AT+CRSM	+	+
AT+CSIM	+	+
USIM Application Toolkit (USAT) Commands		
AT^SSTA	+	+
AT+STKPRO	+	+
AT+STKTR	+	+
AT+STKENV	+	+
AT+STKCC	+	+
AT+STKCNF	+	+
Phonebook Commands		
AT+CNUM	+	+
AT+CPBR	+	+
AT+CPBS	+	+
AT+CPBW	+	+
AT+CPBF	+	+
AT+CSVM	+	+
Audio Commands		
ATL	+	+
AT+CMUT	+	+
AT+VTD	+	-
AT+VTS	+	-
AT^SAIC	+	+
AT^SNFI	+	+
AT^SNFM	+	+
AT^SNFO	+	+
AT^SNFS	+	+
AT^SNFTTY	+	-
AT^SRTC	+	+
AT^SAFH	+	+
Java related Commands		
AT^SJAM	+	+
AT^SJDL	+	+
AT^SJMSEC	+	+
AT^SJNET	+	+
AT^SJOTAP	+	-
AT^SJRA	+	+

AT Command	Normal Mode	✈
Miscellaneous Commands		
A/	+	+
ATS3	+	+
ATS4	+	+
ATS5	+	+
AT^SFDL	+	+
AT^SFSA	+	+
Hardware related Commands		
AT+CCLK	+	+
AT+CALA	+	+
AT^SBV	+	+
AT^SCTM	+	+
AT^SLED	+	+
AT^SRADC	+	+
AT^SSPI	+	+
AT^SWDAC	+	+
General Purpose I/O (GPIO) Pin related Commands		
AT^SCPIN	+	+
AT^SGIO	+	+
AT^SSIO	+	+
AT^SCPOL	+	+
AT^SSCNT	+	+
AT^SCCNT	+	+
AT^SPIO	+	+

21.5 AT Command Settings storable with AT&W

Table 21.7: Settings Stored to User Profile

AT Command	Stored Parameters
Configuration Commands	
ATQ	<n>
ATV	<value>
ATX	<value>
AT+CMEE	<errMode>
Status Control Commands	
AT^SIND	<dtmfSrc>, <dtmfSilenceTime>, <dtmf-BufferTimeout>, <dtmfMinToneTime>
Serial Interface Control Commands	
AT\Q	<n>
AT&C	<value>
AT&D	<value>
AT&S	<value>
ATE	<value>
AT+ICF	<format>, <parity>
Call related Commands	
ATS0	<n>
AT+CBST	<speed>, <name>, <ce>
AT+CRLP	<iws>, <mws>, <T1>, <N2>
AT+CR	<mode>
AT+CRC	<mode>
ATS6	<n>
ATS7	<n>
ATS8	<n>
ATS10	<n>
Network Service Commands	
AT+COPS	<format>
AT+CREG	<Mode>
Supplementary Service Commands	
AT+CLIP	<n>
AT+CNAP	<n>
Short Message Service (SMS) Commands	
AT+CMGF	<mode>
AT+CNMI	<mode>, <mt>, <bm>, <ds>, <bfr>

AT Command	Stored Parameters
AT+CSDH	<show>
AT+CSMS	<service>
Miscellaneous Commands	
ATS3	<n>
ATS4	<n>
ATS5	<n>
Hardware related Commands	
AT^SLED	<mode>, <flash>

21.6 Factory Default Settings Restorable with AT&F

Table 21.8: Factory Default Settings Restorable with AT&F

AT Command	Factory Defaults
Configuration Commands	
ATQ	<n>=0
ATV	<value>=1
ATX	<value>=4
AT+CMEE	<errMode>=0
AT+CSCS	<chset>="GSM"
Serial Interface Control Commands	
AT\Q	<n>=3
AT&C	<value>=1
AT&D	<value>=2
AT&S	<value>=0
ATE	<value>=1
AT+ICF	<format>=3
Call related Commands	
ATS0	<n>=000
AT+CBST	<speed>=7, <name>=0, <ce>=1
AT+CRLP	<iws>=61, <mws>=61, <T1>=78, <N2>=6
AT+CR	<mode>=0
AT+CRC	<mode>=0
ATS7	<n>=060
ATS8	<n>=000
ATS10	<n>=002
Network Service Commands	
AT+COPS	<format>=0
AT+CREG	<Mode>=0
Supplementary Service Commands	
AT+CLIP	<n>=0
AT+CNAP	<n>=0
Short Message Service (SMS) Commands	
AT+CMGF	<mode>=0
AT+CNMI	<mode>=1, <mt>=0, <bm>=0, <ds>=0, <bfr>=0
AT+CSDH	<show>=0
AT+CSMS	<service>=0

AT Command	Factory Defaults
Miscellaneous Commands	
ATS3	<n>=013
ATS4	<n>=010
ATS5	<n>=008
Hardware related Commands	
AT^SLED	<mode>=0, <flash>=10

21.7 Summary of Unsolicited Result Codes (URC)

Table 21.9: Summary of Unsolicited Result Codes (URC)

AT Command	URC
Unsolicited Result Code Presentation	
	^SYSLOADING
	^SYSSTART
	+PBREADY
	^SYSINFO: <info>
	^SBC: Undervoltage Warning
	^SBC: Undervoltage Shutdown
	^SBC: Overvoltage Warning
	^SBC: Overvoltage Shutdown
Configuration Commands	
AT^SMSO	^SHUTDOWN
Status Control Commands	
AT^SIND	+CIEV: <indDescr>, <indValue>
AT^SIND	+CIEV: <indDescr>
AT^SIND	+CIEV: <indDescr>, <indValue>, <mwiVoice>, <mwiFax>, <mwiEmail>, <mwiOther>
AT^SIND	+CIEV: <indDescr>, <indValue>, <eonsOperator>, <servProvider>
AT^SIND	+CIEV: <indDescr>, <nitzUT>, <nitzTZ>, <nitzDST>
AT^SIND	+CIEV: <indDescr>, <indValue>, <lstaEdvs>, <lstaRssi>
AT^SIND	+CIEV: <indDescr>, <indValue>, <lstaNo>, <lstaMin>, <lstaMax>, <lstaMean>, <lstaVar>
AT^SIND	+CIEV: <indDescr>, <indValue>, <lstaDrxCount>, <lstaRscp>, <lstaNoise>, <lstaEcIo>
AT^SIND	+CIEV: <indDescr>, <indValue>, <lstaFrRep>, <lstaFrScnd>, <lstaFrStart>, <lstaFrEnd>, <lstaMin>, <lstaMax>, <lstaMean>, <lstaGrade>
AT^SIND	+CIEV: <indDescr>, <dtmfChar>
Call related Commands	
AT^SXCALLSTAT	^SXCALLSTAT: <n>, <stat>
AT+CRC	RING
AT+CRC	+CRING: <type>
Network Service Commands	
AT+CREG	+CREG: <regStatus>
AT+CREG	+CREG: <regStatus>[, <netLac>, <netCellId>[, <AcT>]]
AT+CTZR	+CTZV: <timezone>, <time>
AT+CTZR	+CTZV: <dst>
AT+CTZR	+NITZINFO: <timezone_variance>, <time>

AT Command	URC
Supplementary Service Commands	
AT+CAOC	+CCCM: <ccmValue>
AT+CCWA	+CCWA: <calling number>, <type of number>, <class>, , <CLI validity>
AT+CLIP	+CLIP: <number>, <type>[, , [, [<alpha>][, <CLI validity>]]]
AT+COLP	+COLP: <number>, <type>
AT+CNAP	+CNAP: <name>[, <CNI validity>]
AT+CSSN	+CSSI: <code 1>
AT+CSSN	+CSSU: <code 2>
AT+CUSD	+CUSD: <ussdStatus>[, <ussdRsp>[, <ussdDCS>]]
Internet Service Commands	
AT^SISR	^SISR: <srvProfileId>, <urcCauseId>
AT^SISW	^SISW: <srvProfileId>, <urcCauseId>
Internet Service URC "^SIS"	^SIS: <srvProfileId>, <urcCause>[, [<urcInfoId>][, <urcInfoText>]]
Packet Domain Related Commands	
AT+CGEREP	+CGEV: NW DEACT <PDP_type>, <PDP_addr>, [<cid>]
AT+CGEREP	+CGEV: ME DEACT <PDP_type>, <PDP_addr>, [<cid>]
AT+CGEREP	+CGEV: NW DETACH
AT+CGEREP	+CGEV: ME DETACH
AT+CGEREP	+CGEV: NW CLASS <class>
AT+CGEREP	+CGEV: ME CLASS <class>
AT+CGEREP	+CGEV: ME PDN ACT <cid>
AT+CGREG	+CGREG: <stat>
AT+CGREG	+CGREG: <stat>[, <lac>, <ci>][, <AcT>, <rac>]
Short Message Service (SMS) Commands	
AT+CNMI	+CMTI: <mem3>, <index>
AT+CNMI	+CMT: [<alpha>], <length><CR><LF><pdu>
AT+CNMI	+CMT: <oa>, [<alpha>], <scts>[, <tooa>, <fo>, <pid>, <dcs>, <sca>, <tosca>, <length>]<CR><LF><data>
AT+CNMI	+CBM: <length><CR><LF><pdu>
AT+CNMI	+CBM: <sn>, <mid>, <dcs>, <page>, <pages><CR><LF><data>
AT+CNMI	+CBMI: <mem3>, <index>
AT+CNMI	+CDS: <length><CR><LF><pdu>
AT+CNMI	+CDS: <fo>, <mr>[, <ra>][, <tora>], <scts>, <dt>, <st>
AT+CNMI	+CDSI: <mem3>, <index>
USIM Application Toolkit (USAT) Commands	
AT+STKPRO	+STKPRO: 01, <CmdQualifier>
AT+STKPRO	+STKPRO: 05, <EventList>

AT Command	URC
AT+STKPRO	+STKPRO: 16, <DialNumber>, <Subaddr>, <CmdQualifier>, <Alpha1>, <IconId1>, <Alpha2>, <IconId2>
AT+STKPRO	+STKPRO: 17, <SsData>, <Alpha>, <IconId>, <RefNumber>
AT+STKPRO	+STKPRO: 18, <Dcs>, <HexString>, <Alpha>, <IconId>, <RefNumber>
AT+STKPRO	+STKPRO: 19, <Alpha>, <IconId>, <RefNumber>
AT+STKPRO	+STKPRO: 20, <Alpha>, <IconId>, <DtmfStr>
AT+STKPRO	+STKPRO: 21, <Url>, <Alpha>, <IconId>
AT+STKPRO	+STKPRO: 32, <Tone>, <TimeUnit>, <Interval>, <Alpha>, <IconId>
AT+STKPRO	+STKPRO: 33, <CmdQualifier>, <Dcs>, <HexString>, <IconId>
AT+STKPRO	+STKPRO: 34, <CmdQualifier>, <Dcs>, <HexString>, <IconId>
AT+STKPRO	+STKPRO: 35, <CmdQualifier>, <Dcs>, <HexString>, <MaxRespLen>, <MinRespLen>, <DefaultText>, <IconId>
AT+STKPRO	+STKPRO: 36, <CmdQualifier>, <Alpha>, <ItemId>, <TotalItems>, <ItemText>, <NextAction>, <DefaultItem>, <IconId>, <IconIdListElem>
AT+STKPRO	+STKPRO: 37, <CmdQualifier>, <Alpha>, <ItemId>, <TotalItems>, <ItemText>, <NextAction>, <IconId>, <IconIdListElem>
AT+STKPRO	+STKPRO: 38, <CmdQualifier>
AT+STKPRO	+STKPRO: 40, <Dcs>, <HexString>, <IconId>
AT+STKPRO	+STKPRO: 53, <Lang>
AT+STKPRO	+STKPRO: 64, <CmdQualifier>, <Alpha>, <IconId>, <DialNumber>, <ReconInterval>, <ReconTimeUnit>, <IdleInterval>, <IdleUnit>, <BearerType>, <BearerParam>, <BufSize>, <LoginDcs>, <LoginText>, <PasswordDcs>, <PasswordText>, <TransportLevel>, <TransportPort>, <SubaddrCs>, <DestAddrType>, <DestAddr>
AT+STKPRO	+STKPRO: 65, <CmdQualifier>, <Alpha>, <IconId>
AT+STKPRO	+STKPRO: 66, <CmdQualifier>, <Alpha>, <IconId>, <ChannelID>, <ChannelDataLen>
AT+STKPRO	+STKPRO: 67, <CmdQualifier>, <Alpha>, <IconId>, <ChannelID>, <ChannelData>
AT+STKPRO	+STKPRO: 68, <CmdQualifier>
AT+STKCC	+STKCC: 1, <ResVal>, <Alpha>, <PhoneNumber>, <NumberType>
AT+STKCC	+STKCC: 2, <ResVal>, <Alpha>, <SsCode>
AT+STKCC	+STKCC: 3, <ResVal>, <Alpha>, <UssdCode>
AT+STKCC	+STKCC: 4, <ResVal>, <Alpha>, <ToSca>, <Sca>, <ToRa>, <Ra>
AT+STKCNF	+STKCNF: <ProactCmd>, <Result>, <AddResult>, <Sw1>
Hardware related Commands	
AT+CALA	+CALA: [<text>]
AT^SCTM	^SCTM_B: <UrcCause>
AT^SCTM	^SHUTDOWN
AT^SRADC	^SRADC: <count>, <value>[, <value>[, <value>[, <value>[, <value>[, <value>[, <value>[, <value>[, <value>]]]]]]]]
General Purpose I/O (GPIO) Pin related Commands	
AT^SCPOL	^SCPOL: <io_id>, <value>

AT Command	URC
AT^SSCNT	^SSCNT: <pulse>
AT^SCCNT	^SCCNT: <time>

21.8 Alphabetical List of AT Commands

Table 21.10: Alphabetical List of AT Commands

AT Command	Description	Section and Page
+++	Switch from data mode or PPP online mode to command mode	Section 7.12, page 143
A/	Repeat Previous Command Line	Section 18.1, page 418
AT&C	Set Data Carrier Detect (DCD) Line Mode	Section 4.2, page 103
AT&D	Set Data Terminal Ready (DTR) Line Mode	Section 4.3, page 104
AT&F	Reset AT Command Settings to Factory Default Values	Section 2.1, page 32
AT&S	Set Data Set Ready (DSR) Line Mode	Section 4.4, page 105
AT&V	Display current configuration	Section 2.2, page 33
AT&W	Store AT Command Settings to User Defined Profile	Section 2.3, page 35
AT+CACM	Accumulated call meter (ACM) reset or query	Section 9.1, page 191
AT+CALA	Alarm Configuration	Section 19.2, page 433
AT+CAMM	Accumulated call meter maximum (ACMmax) set or query	Section 9.2, page 192
AT+CAOC	Advice of Charge Information	Section 9.3, page 193
AT+CBST	Select Bearer Service Type	Section 7.13, page 144
AT+CCFC	Call forwarding number and conditions control	Section 9.5, page 196
AT+CCID	USIM Card Identification Number	Section 13.1, page 345
AT+CCLK	Real Time Clock	Section 19.1, page 432
AT+CCUG	Closed User Group	Section 9.4, page 194
AT+CCWA	Call Waiting	Section 9.6, page 199
AT+CECALL	Initiate eCall	Section 7.20, page 155
AT+CEER	Extended Error Report	Section 3.1, page 82
AT+CFUN	Functionality Level	Section 2.8, page 40
AT+CGACT	PDP context activate or deactivate	Section 11.1, page 276
AT+CGANS	Manual response to a network request for PDP context activation	Section 11.2, page 278
AT+CGATT	GPRS attach or detach	Section 11.3, page 280
AT+CGAUTO	Automatic response to a network request for PDP context activation	Section 11.4, page 281
AT+CGCMOD	PDP Context Modify	Section 11.7, page 287
AT+CGDATA	Enter data state	Section 11.5, page 283
AT+CGDCONT	Define PDP Context	Section 11.6, page 285
AT+CGEQMIN	Rel. 99 Quality of Service Profile (Minimum acceptable)	Section 11.8, page 288
AT+CGEQREQ	Rel. 99 Quality of Service Profile (Requested)	Section 11.9, page 292
AT+CGEREP	GPRS event reporting	Section 11.10, page 296
AT+CGMI	Request manufacturer identification	Section 5.2, page 114
AT+CGMM	Request model identification	Section 5.3, page 115
AT+CGMR	Request revision identification of software status	Section 5.4, page 116
AT+CGPADDR	Show PDP address	Section 11.11, page 298
AT+CGQMIN	Quality of Service Profile (Minimum acceptable)	Section 11.12, page 299
AT+CGQREQ	Quality of Service Profile (Requested)	Section 11.13, page 302

AT Command	Description	Section and Page
AT+CGREG	Packet Domain Network Registration Status	Section 11.14, page 305
AT+CGSMS	Select service for MO SMS messages	Section 11.15, page 307
AT+CGSN	Request International Mobile Equipment Identity (IMEI)	Section 5.5, page 117
AT+CHLD	Call Hold and Multiparty	Section 9.7, page 202
AT+CHUP	Hang up call	Section 7.8, page 139
AT+CIMI	Request International Mobile Subscriber Identity (IMSI)	Section 5.7, page 118
AT+CLCC	List of current calls	Section 7.16, page 148
AT+CLCK	Facility lock	Section 6.3, page 123
AT+CLIP	Calling Line Identification Presentation	Section 9.8, page 204
AT+CLIR	Calling Line Identification Restriction	Section 9.9, page 206
AT+CMEE	Error Message Format	Section 2.10, page 43
AT+CMGC	Send SMS Command	Section 12.2, page 318
AT+CMGD	Delete short message	Section 12.3, page 319
AT+CMGF	Select SMS message format	Section 12.4, page 320
AT+CMGL	List SMS messages from preferred store	Section 12.5, page 321
AT+CMGR	Read SMS messages	Section 12.6, page 323
AT+CMGS	Send SMS	Section 12.7, page 325
AT+CMGW	Write Short Messages to Memory	Section 12.8, page 326
AT+CMMS	More Messages to Send	Section 12.9, page 328
AT+CMSS	Send short messages from storage	Section 12.10, page 329
AT+CMUT	Mute control	Section 16.2, page 386
AT+CMUX	Multiplex mode	Section 4.8, page 111
AT+CNAP	Calling Name Presentation	Section 9.11, page 209
AT+CNMA	New Message Acknowledgement to ME/TE	Section 12.11, page 330
AT+CNMI	SMS Event Reporting Configuration	Section 12.12, page 331
AT+CNUM	Read own numbers	Section 15.1, page 373
AT+COLP	Connected Line Identification Presentation	Section 9.10, page 207
AT+COPN	Read operator names	Section 8.1, page 160
AT+COPS	Operator Selection	Section 8.2, page 161
AT+CPAS	Activity Status	Section 3.3, page 101
AT+CPBF	Find phonebook entries	Section 15.5, page 381
AT+CPBR	Read from Phonebook	Section 15.2, page 374
AT+CPBS	Select phonebook memory storage	Section 15.3, page 377
AT+CPBW	Write into Phonebook	Section 15.4, page 379
AT+CPIN	PIN Authentication	Section 6.1, page 119
AT+CPIN2	PIN2 Authentication	Section 6.2, page 121
AT+CPLS	Select Preferred Operator List	Section 8.8, page 172
AT+CPMS	Preferred SMS message storage	Section 12.13, page 334
AT+CPOL	Preferred Operator List	Section 8.7, page 170
AT+CPUC	Price per unit and currency table	Section 9.12, page 211
AT+CPWD	Change Password	Section 6.4, page 127
AT+CR	Service reporting control	Section 7.18, page 152

AT Command	Description	Section and Page
AT+CRC	Incoming Call Indication Format	Section 7.19, page 153
AT+CREG	Network Registration Status	Section 8.5, page 167
AT+CRLP	Configure RLP Parameters for Outgoing Non-Transparent Data Calls	Section 7.15, page 147
AT+CRSM	Restricted SIM Access	Section 13.2, page 346
AT+CSCA	SMS Service Center Address	Section 12.14, page 336
AT+CSCB	Select Cell Broadcast Message Indication	Section 12.15, page 337
AT+CSCS	Character Set	Section 2.11, page 52
AT+CSDH	Show SMS text mode parameters	Section 12.16, page 338
AT+CSIM	Generic USIM Access	Section 13.3, page 348
AT+CSMP	Set SMS Text Mode Parameters	Section 12.17, page 339
AT+CSMS	Select Message Service	Section 12.18, page 341
AT+CSQ	Signal quality	Section 8.6, page 169
AT+CSSN	Supplementary service notifications	Section 9.13, page 213
AT+CSTA	Select type of address	Section 7.14, page 146
AT+CSVM	Set voice mail number	Section 15.6, page 383
AT+CTZR	Time Zone Reporting	Section 8.9, page 173
AT+CTZU	Automatic Time Zone Update	Section 8.10, page 175
AT+CUSD	Unstructured Supplementary Service Data	Section 9.14, page 215
AT+GSN	Request International Mobile Equipment Identity (IMEI)	Section 5.6, page 117
AT+ICF	Character Framing	Section 4.6, page 107
AT+IPR	Bit Rate	Section 4.7, page 109
AT+STKCC	USAT Call Control Notification	Section 14.5, page 367
AT+STKCNF	USAT Proactive Session Status	Section 14.6, page 369
AT+STKENV	USAT Envelope Command	Section 14.4, page 365
AT+STKPRO	USAT Proactive Command URCs	Section 14.2, page 352
AT+STKTR	USAT Terminal Response Commands	Section 14.3, page 359
AT+VTD	Tone duration	Section 16.3, page 387
AT+VTS	DTMF and tone generation	Section 16.4, page 388
AT\Q	Flow Control	Section 4.1, page 102
AT^SAFH	Audio File Handling	Section 16.12, page 401
AT^SAIC	Audio Interface Configuration	Section 16.5, page 390
AT^SBV	Battery/Supply Voltage	Section 19.3, page 436
AT^SCCNT	Configure Pulse Counter	Section 20.6, page 463
AT^SCFG	Extended Configuration Settings	Section 2.12, page 53
AT^SCPIN	Pin Configuration	Section 20.1, page 455
AT^SCPOL	Polling Configuration	Section 20.4, page 460
AT^SCTM	Critical Operating Temperature Monitoring	Section 19.4, page 437
AT^SFDL	Firmware Download	Section 18.5, page 422
AT^SFSA	Flash File System Access	Section 18.6, page 423
AT^SGAUTH	Set Type of Authentication for PDP-IP Connections	Section 11.18, page 310
AT^SGCONF	Configuration of GPRS related Parameters	Section 11.19, page 312

AT Command	Description	Section and Page
AT^SGCOPS	Operator Selection for GPRS-ONLY SIM Cards	Section 8.11, page 176
AT^SGIO	Get IO state of a specified pin or port	Section 20.2, page 458
AT^SHUP	Hang up call(s) indicating a specific 3GPP TS 24.008 release cause	Section 7.9, page 140
AT^SICI	Internet Connection Information	Section 10.2, page 224
AT^SICS	Internet Connection Setup Profile	Section 10.1, page 221
AT^SIND	Extended Indicator Control	Section 3.2, page 90
AT^SIPS	Internet Profile Storage	Section 10.3, page 227
AT^SISC	Internet Service Close	Section 10.7, page 242
AT^SISE	Internet Service Error Report	Section 10.13, page 254
AT^SISH	Internet Listener Service Disconnect	Section 10.11, page 251
AT^SISI	Internet Service Information	Section 10.5, page 236
AT^SISO	Internet Service Open	Section 10.6, page 238
AT^SISR	Internet Service Read Data	Section 10.8, page 243
AT^SISS	Internet Service Setup Profile	Section 10.4, page 228
AT^SIST	Enter Transparent Access Mode	Section 10.10, page 249
AT^SISW	Internet Service Write Data	Section 10.9, page 246
AT^SISX	Internet Service Execution	Section 10.12, page 252
AT^SJAM	Manage Java Application	Section 17.1, page 404
AT^SJDL	Java Download	Section 17.2, page 407
AT^SJMSEC	Java Midlet Security	Section 17.3, page 409
AT^SJNET	Set Dialup Network Access Parameters	Section 17.4, page 412
AT^SJOTAP	Over The Air Application Provisioning	Section 17.5, page 414
AT^SJRA	Run Java Application	Section 17.6, page 417
AT^SLED	LED Feature	Section 19.5, page 439
AT^SMGL	List Short Messages from preferred store without setting status to REC READ	Section 12.19, page 343
AT^SMGR	Read short message without setting status to REC READ	Section 12.20, page 344
AT^SMONI	Monitoring Serving Cell	Section 8.12, page 177
AT^SMONP	Monitoring Neighbour Cells	Section 8.13, page 183
AT^SMSO	Switch Off EHS6-A	Section 2.9, page 42
AT^SNFI	Set microphone path parameters	Section 16.6, page 391
AT^SNFM	Set microphone audio path and power supply	Section 16.7, page 393
AT^SNFO	Set audio output (= loudspeaker path) parameter	Section 16.8, page 394
AT^SNFS	Select audio hardware set	Section 16.9, page 396
AT^SNFTTY	Signal TTY/CTM Audio Mode Capability	Section 16.10, page 398
AT^SNMON	Network monitoring	Section 8.14, page 188
AT^SPIO	GPIO Driver Open/Close	Section 20.7, page 465
AT^SPOW	Set UART Mode and SLEEP Mode on UART	Section 2.13, page 80
AT^SRADC	Configure and Read ADC Measurement	Section 19.6, page 441
AT^SRTC	Ring tone configuration	Section 16.11, page 399
AT^SSCNT	Start and Stop Pulse Counter	Section 20.5, page 461

AT Command	Description	Section and Page
AT^SSIO	Set IO state of a specified pin or port	Section 20.3, page 459
AT^SSPI	Serial Protocol Interface	Section 19.7, page 444
AT^SSTA	Remote-SAT Interface Activation	Section 14.1, page 349
AT^SWDAC	PWM Signal Configuration for DAC	Section 19.8, page 453
AT^SXCALLSTAT	Set Reporting Call Status	Section 7.17, page 150
AT^SXEONS	Display EONS Names	Section 8.4, page 166
AT^SXRAT	Selection of Radio Access Technology	Section 8.3, page 164
ATA	Connect to Incoming Call	Section 7.1, page 130
ATA	Manual acceptance of a network request for PDP context activation	Section 11.16, page 308
ATD	Mobile originated call to specified number	Section 7.2, page 131
ATD*99#	Request Packet Domain Service	Section 11.17, page 309
ATD><mem><n>	Mobile originated call using specific memory and index number	Section 7.3, page 133
ATD><n>	Mobile originated call from active memory using index number	Section 7.4, page 135
ATD><str>	Mobile originated call from active memory using corresponding field	Section 7.5, page 136
ATDL	Redial last number used	Section 7.6, page 137
ATE	AT Command Echo	Section 4.5, page 106
ATH	Disconnect existing connection	Section 7.7, page 138
ATI	Display product identification information	Section 5.1, page 113
ATL	Set monitor speaker loudness	Section 16.1, page 385
ATO	Switch from command mode to data mode / PPP online mode	Section 7.11, page 142
ATQ	Result Code Presentation Mode	Section 2.4, page 36
ATS0	Set number of rings before automatically answering a call	Section 7.10, page 141
ATS10	Set disconnect delay after indicating the absence of data carrier	Section 7.24, page 159
ATS3	Command Line Termination	Section 18.2, page 419
ATS4	Response Formatting	Section 18.3, page 420
ATS5	Command Line Editing	Section 18.4, page 421
ATS6	Set pause before blind dialing	Section 7.21, page 156
ATS7	Set number of seconds to wait for connection completion	Section 7.22, page 157
ATS8	Comma Dial Pause Time	Section 7.23, page 158
ATV	Result code format mode	Section 2.5, page 37
ATX	CONNECT Result Code Format	Section 2.6, page 38
ATZ	Restore AT Command Settings from User Defined Profile	Section 2.7, page 39

About Gemalto

Gemalto (Euronext NL0000400653 GTO) is the world leader in digital security with 2011 annual revenues of €2 billion and more than 10,000 employees operating out of 74 offices and 14 Research & Development centers, located in 43 countries.

We are at the heart of the rapidly evolving digital society. Billions of people worldwide increasingly want the freedom to communicate, travel, shop, bank, entertain and work - anytime, everywhere - in ways that are enjoyable and safe. Gemalto delivers on their expanding needs for personal mobile services, payment security, authenticated cloud access, identity and privacy protection, eHealthcare and eGovernment efficiency, convenient ticketing and dependable machine-to-machine (M2M) applications.

Gemalto develops secure embedded software and secure products which we design and personalize. Our platforms and services manage these secure products, the confidential data they contain and the trusted end-user services they enable. Our inovations enable our clients to offer trusted and convenient digital services to billions of individuals.

Gemalto thrives with the growing number of people using its solutions to interact with the digital and wireless world.

For more information please visit
m2m.gemalto.com, www.facebook.com/gemalto, or Follow@gemaltom2m on twitter.

Gemalto M2M GmbH
St.-Martin-Str. 60
81541 Munich
Germany

➲ M2M.GEMALTO.COM

gemalto
security to be free

© Gemalto 2015. All rights reserved. Gemalto, the Gemalto logo, are trademarks and service marks of Gemalto and are registered in certain countries. April 2013