D35 Series

Maximum Flow Rate: 36.5 gpm (138 l/min)
Maximum Pressure: 1500 psi (103 bar) for Metallic Pump Heads

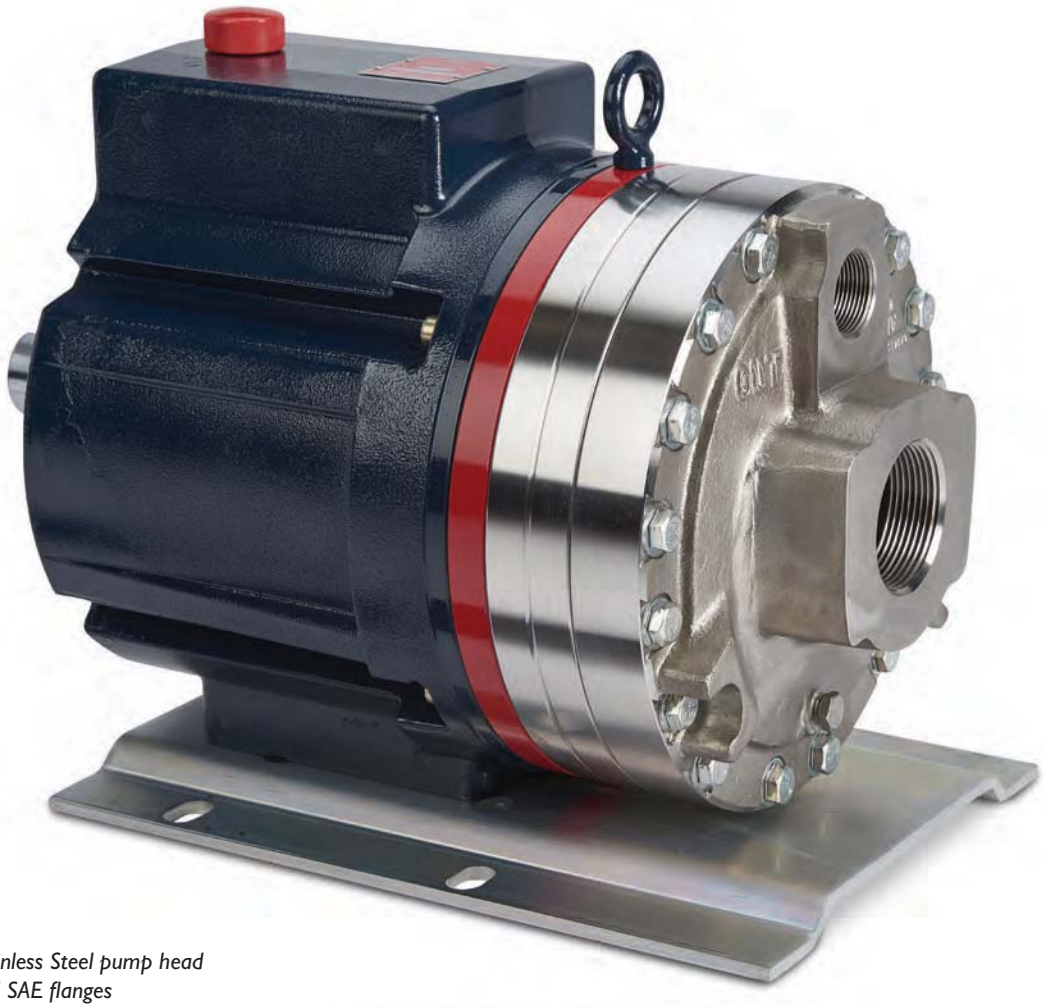

D35 with Stainless Steel pump head and SAE flanges



D35 with Brass pump head

D35 Series Performance

Capacities

Flow

Model	Max. Input rpm	Max. Flow @ 1200 psi (83 bar) gpm	l/min
D35-X	1050	36.5	138
D35-E	1150	34.0	129
		@ 1500 psi (103 bar)	
D35-X	700	23.1	87.5

Pressure

Maximum Inlet Pressure

250 psi (17 bar) with 1500 psi (103 bar) maximum discharge pressure
500 psi (34 bar) with 1200 psi (83 bar) maximum discharge pressure

Maximum Discharge Pressure

1200 psi (83 bar) @ 1150 rpm max.
1500 psi (103 bar) @ 700 rpm max.

Performance and specification ratings apply to D35 configurations unless specifically noted otherwise.

Maximum Flow at Designated Pressure

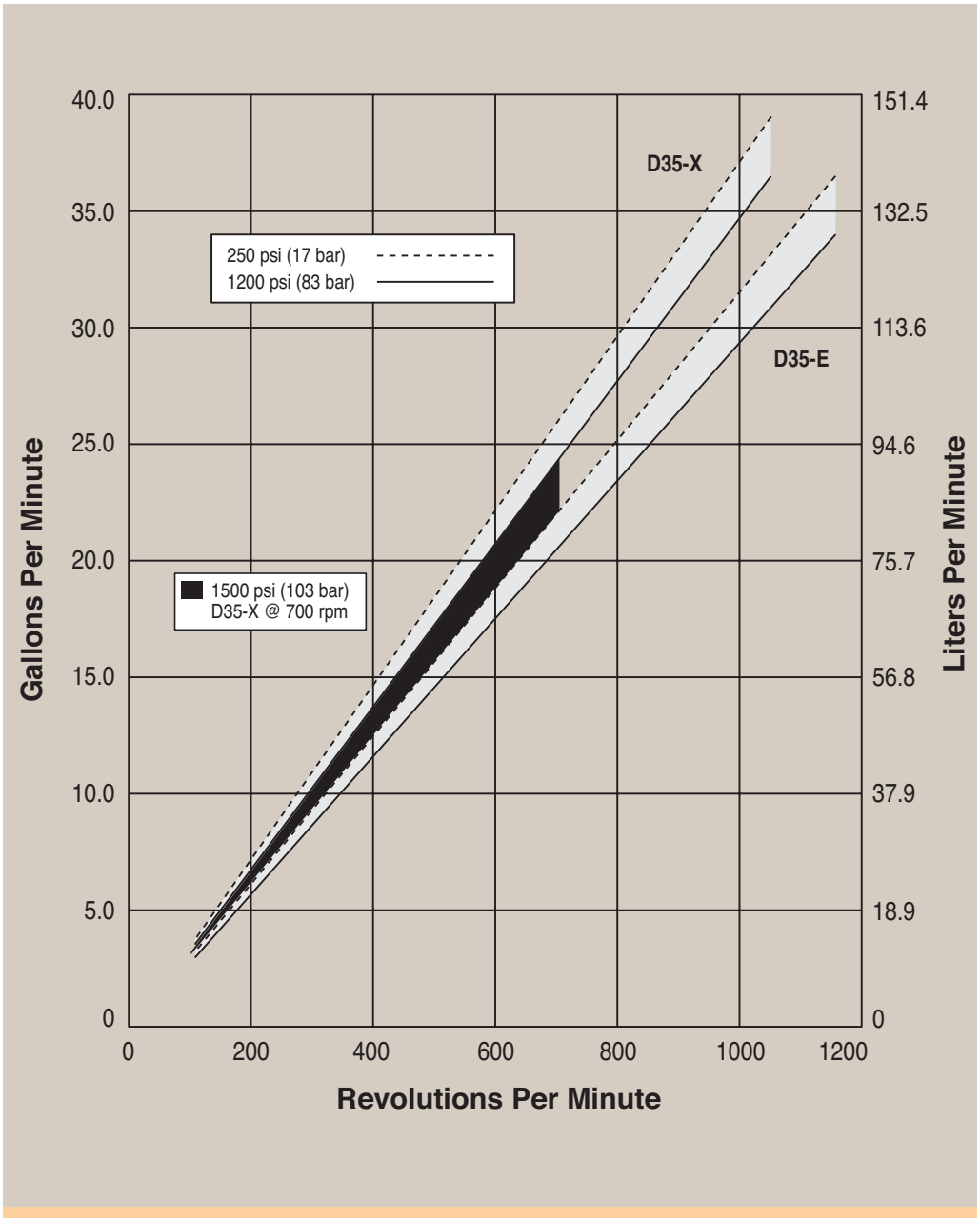



D35 Series Specifications

Flow Capacities @1200 psi (83 bar)			
Model	**rpm**	**gpm**	**l/min**
D35-X	1050	36.5	138
D35-E	1150	34.0	129
Delivery @1200 psi (83 bar)			
Model	**gal/rev**	**liters/rev**	
D35-X	0.0347	0.1314	
D35-E	0.0296	0.1120	
Delivery @1500 psi (103 bar)			
Model	**gal/rev**	**liters/rev**	
D35-X	0.0330	0.1250	
Maximum Discharge Pressure			
Metallic Heads:	1500 psi (103 bar) @ 700 rpm		
Maximum Inlet Pressure	250 psi (17 bar) with 1500 psi (103 bar) maximum discharge pressure 500 psi (34 bar) with 1200 psi (83 bar) maximum discharge pressure		
Maximum Operating Temperature			
Metallic Heads:	250° F (121° C) - Consult factory for correct component selection for temperatures from 160° F (71° C) to 250° F (121° C).		
Maximum Solids Size	800 microns		
Inlet Port	2-1/2 inch NPT 150lb or 600lb ANSI RF flange 3 inch SAE flange		
Discharge Port	1-1/4 inch NPT 600lb or 1500lb ANSI RF flange 1-1/4 inch SAE flange		
Shaft Diameter	2 inch (50.8 mm)		
Shaft Rotation	Reverse (bi-directional)		
Bearings	Tapered roller bearings		
Oil Capacity	7.75 US quarts (7.3 liters) - See pages 104 and 105 for oil selection and specification.		
Weight			
Metallic Heads:	257 lbs. (116.6 kg)		

Net Positive Suction Head (NPSHr)

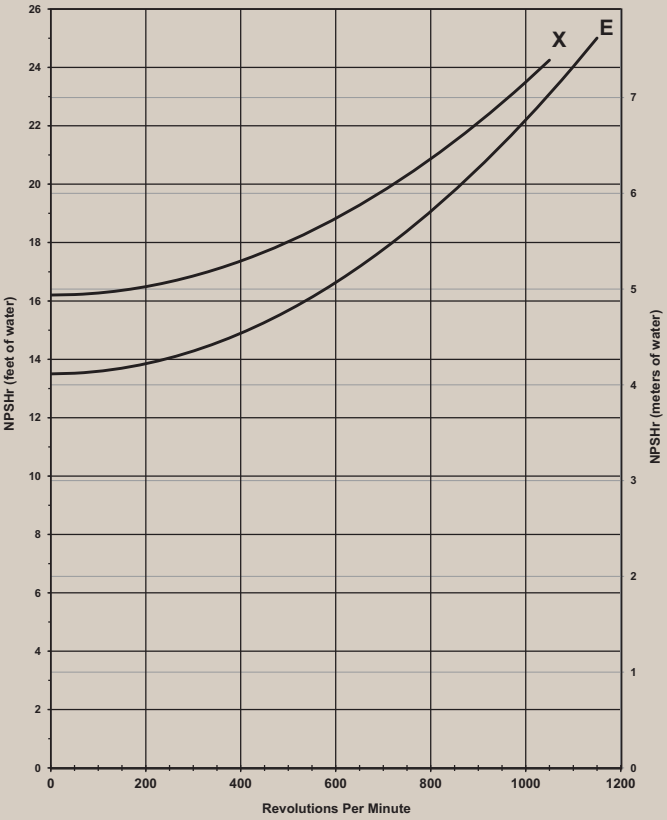

Note: Positive inlet pressure required with PTFE diaphragms.

Self-priming:

Each Hydra-Cell pump has different lift capability depending on model size, cam angle, speed, and fluid characteristics. To ensure that your specific lift characteristics are met, refer to the inlet calculations regarding friction, and acceleration head losses in your Hydra-Cell Installation & Service Manual. Compare those calculations to the NPSHr curves above.

Calculating Required Power

$$\frac{100 \times \text{rpm}}{63{,}000} + \frac{\text{gpm} \times \text{psi}}{1{,}460} = \text{electric motor hp}$$

$$\frac{100 \times \text{rpm}}{84{,}428} + \frac{\text{l/min} \times \text{bar}}{511} = \text{electric motor kW}$$

See page 168 for calculating pulley size.

When using a variable frequency controller (VFD) calculate the hp or kW at minimum and maximum pump speed to ensure the correct hp or kW motor is selected. Note that motor manufacturers typically de-rate the service factor to 1.0 when operating with a VFD.

For technical assistance in pump selection, see Frequently Asked Questions on page 166, Design Considerations on page 167, and Installation Guidelines on pages 168-169.

D35 Series Representative Drawings

D35 Models with NPT Inlet/Outlet Ports Inches (mm)

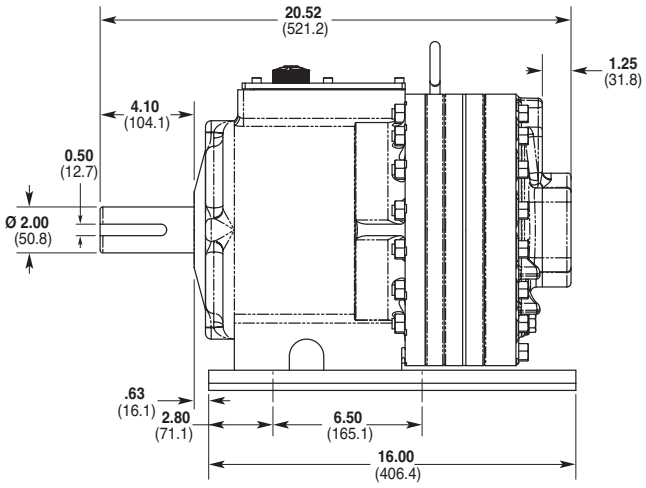

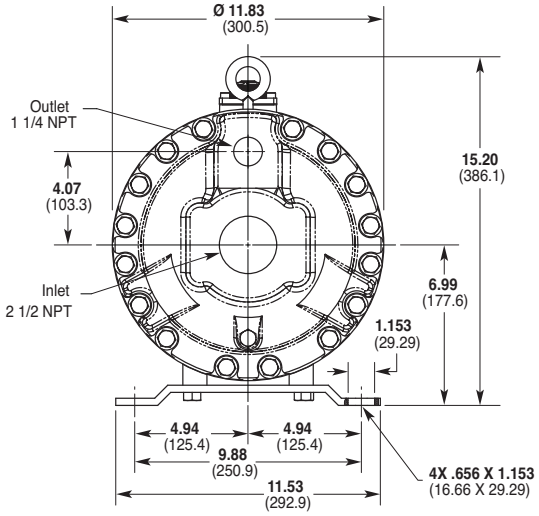

D35 Models with SAE Flange Inlet/Outlet Ports Inches (mm)

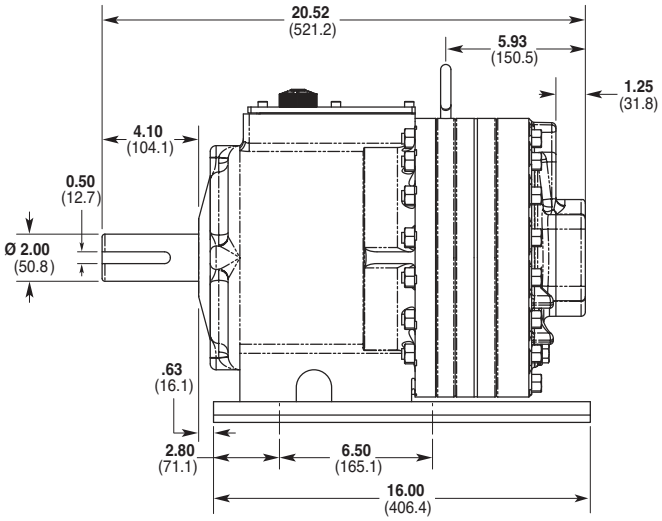

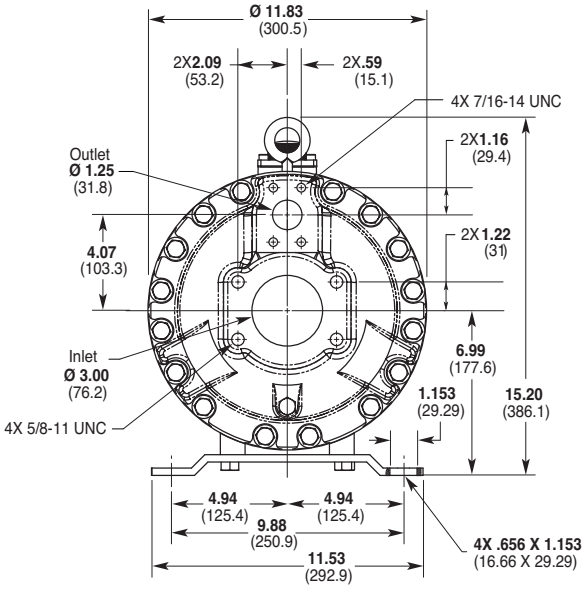

Note: *Contact factory for additional drawings of specific models and configurations.*

D35 Series Representative Drawings/Valves/Skids

D35 Models with ANSI Flange Inlet/Outlet Ports Inches (mm)

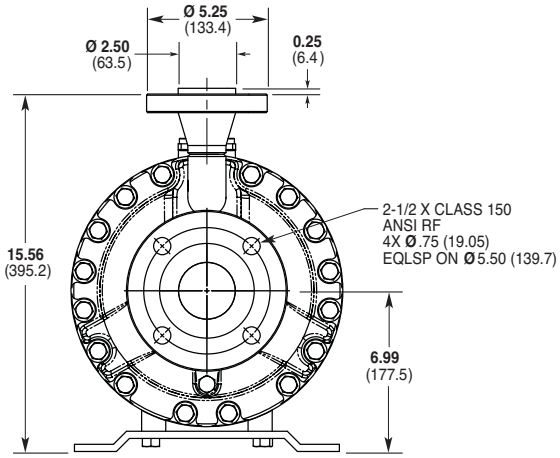

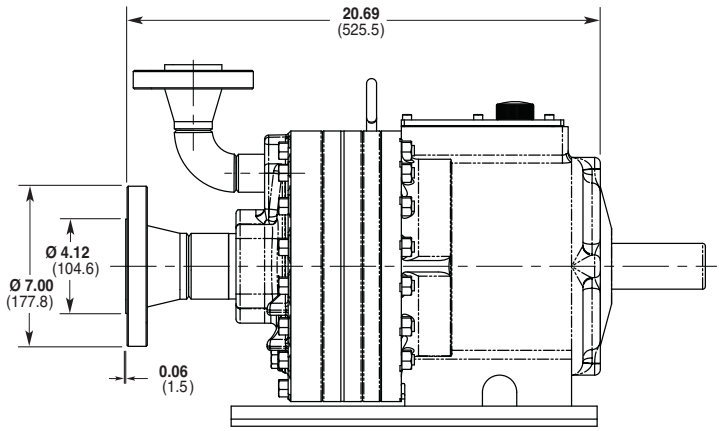

Note: *Contact factory for additional drawings of specific models and configurations.*

Valve Selection

A seal-less C64 Pressure Regulating Valve is recommended for Hydra-Cell D35 pumping systems, especially for high-pressure requirements or when handling dirty fluids.

See page 88 for more information.



A C24 Pressure Regulating Valve provides a capable, lower-cost alternative to C64 valves for Hydra-Cell D35 pumping systems.

See page 84 for more information.





Skid-mounted D35 with 20hp, 3-phase motor.

D35 Series How to Order

Ordering Information

1	2	3	4	5	6	7	8	9	10	11	12

A complete D35 Series Model Number contains 12 digits including 9 customer-specified design and materials options, for example: D35XKBTHFECA.

Digit	Order Code	Description
1-3		**Pump Configuration**
	D35	Shaft-driven (NPT Ports or SAE or ANSI Flanges)
4		**Hydraulic End Cam**
	X	Max 36.5 gpm (138 l/min) @ 1050 rpm
	E	Max 34.0 gpm (129 l/min) @ 1150 rpm
5		**Pump Head Version**
	K	Kel-Cell NPT Ports or ANSI Flanges
	E	Kel-Cell SAE Flanges
6		**Pump Head Material**
	B	Brass
	C	Cast Iron (Nickel-plated)
	G	Duplex Alloy 2205 (with Hastelloy C followers & follower screws)
	Q	316L Stainless Steel ANSI flange class 600 x 1500
	R	316L Stainless Steel ANSI flange class 150 x 600
	S	316L Stainless Steel - threaded or SAE ports
	T	Hastelloy CW12MW
7		**Diaphragm & O-ring Material**
	A	Aflas diaphragm / PTFE o-ring
	E	EPDM (requires EPDM-compatible oil - Digit 12 oil code D)
	G	FKM
	J	PTFE (available with E cam only; 1050 rpm max.)
	P	Neoprene
	T	Buna-N
8		**Valve Seat Material**
	C	Ceramic
	D	Tungsten Carbide
	H	17-4 Stainless Steel
	N	Nitronic 50
	T	Hastelloy C
9		**Valve Material**
	C	Ceramic
	D	Tungsten Carbide
	F	17-4 Stainless Steel
	N	Nitronic 50
	T	Hastelloy C

Digit	Order Code	Description
10		**Valve Springs**
	E	Elgiloy
	H	17-7 Stainless Steel
	T	Hastelloy C
11		**Valve Spring Retainers**
	C	Celcon
	H	17-7 Stainless Steel
	M	PVDF
	P	Polypropylene
	T	Hastelloy C
	Y	Nylon (Zytel)
12		**Hydra-Oil**
	A	10W30 standard-duty oil
	B	40-wt for continuous-duty oil (use with 316L SST or Hastelloy CW12MW pump head - standard)
	D	EPDM-compatible oil
	E	Food-contact oil
	G	5W30 cold-temp severe-duty synthetic oil
	H	15W50 high-temp severe-duty synthetic oil

D35 Pump Housing is standard as Cast Aluminum. Upgrade to Ductile Iron available.

Note: *For motors, bases, couplings and other pump accessories, refer to the Accessories section beginning on page 92.*