1.2 Types ZIZS, ZIZA

The types ZIZA are only available in configuration A (S_{17}). The distance dimensions S_8, S_9 and S_{17} will be found in section 6, item 6.9.

L_A dimensions according to the specifications of the customer.

L_Z dimensions ≤ 200 are delivered without part 20 ($L_Z = L_A - 2 \times S_{8/9}$) (however in the case of type ZIZA part 20 is included)

Dimension table see item 1.5.

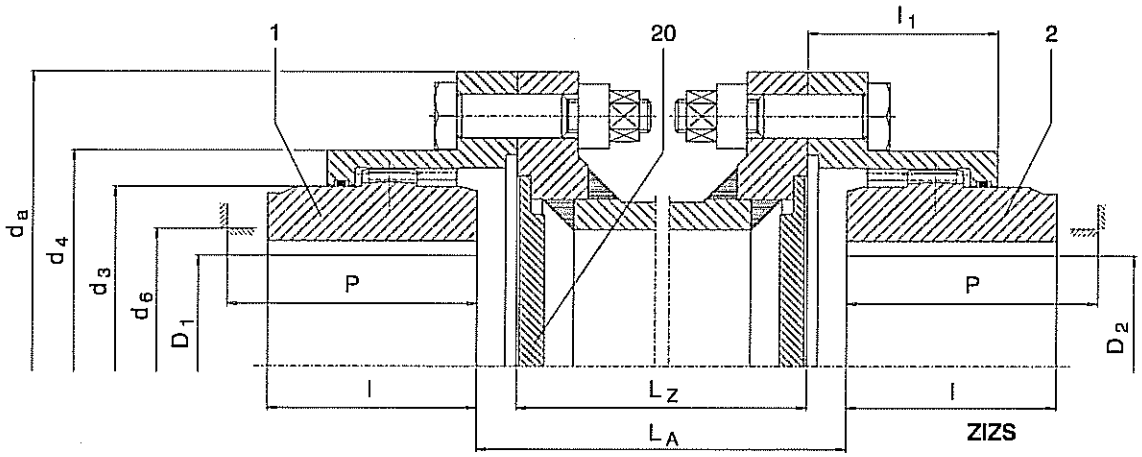

ZIZS

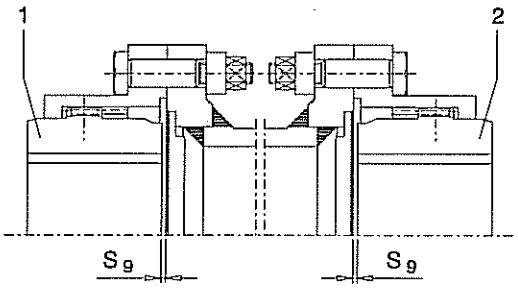

Configuration A

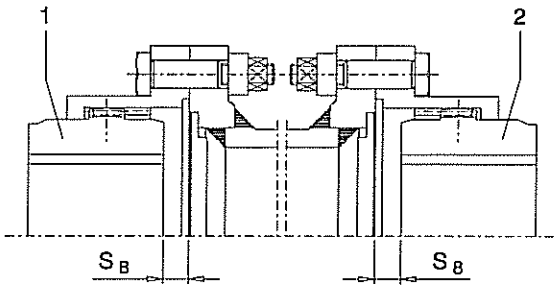

Configuration B

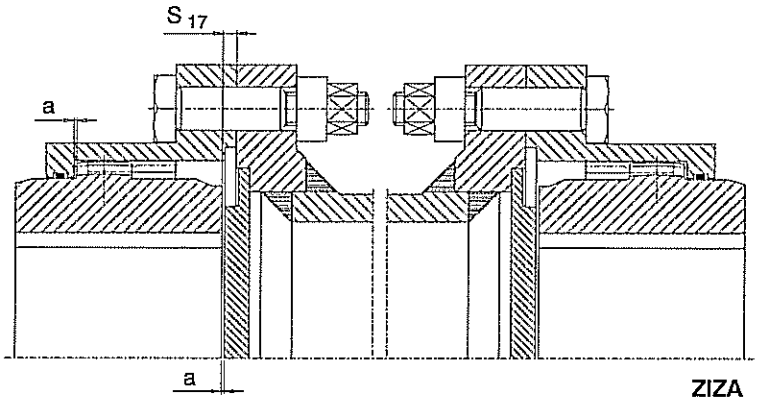

ZIZA