Thermoelectric tripping device BAE72(-S)

- ***Thermoelectric tripping device***
- ***BAE72-S, without LED (order separately)***
  BAE72B-S, with LED (not available for order separately, only integrated with actuator)



Technical data

Electrical data	Rated voltage	AC/DC 24V
	Rated current	Max. 3A
	Through resistance	<1 Ω
	Connection	Cable 1.2m long, 2×0.5 mm², BETA flam 145 (interchangeable wires)
Functional data	Operating temperature thermal trips	Tf1: duct outside temperature 72°C Tf2, Tf3: duct inside temperature 72°C (replaceable)
	(..-S) with test button	For function check
	LED	Light when - there is a supply voltage - the temperature fuses are ok - the test switch is not pressed
	Testing	– VdS Verband der Sachversicherer, D-Köln, to DIN 4102, Part 06 – CNPP Centre National de Prévention et Protection, F-Vernon, to NF S61-937
Working conditions	Protection class	III (safety extra-low voltage)
	Degree of protection	IP54
	Ambient temperature range	–30…+50°C
	Storage temperature	–40…+50°C
	Humidity test	To EN 60730-1
	EMC	CE according to 89/336/EEC
	Maintenance	Maintenance-free
Dimensions / weight	Dimensions (L x W x H)	See “Dimensions”
	Weight	85g

Wiring diagram

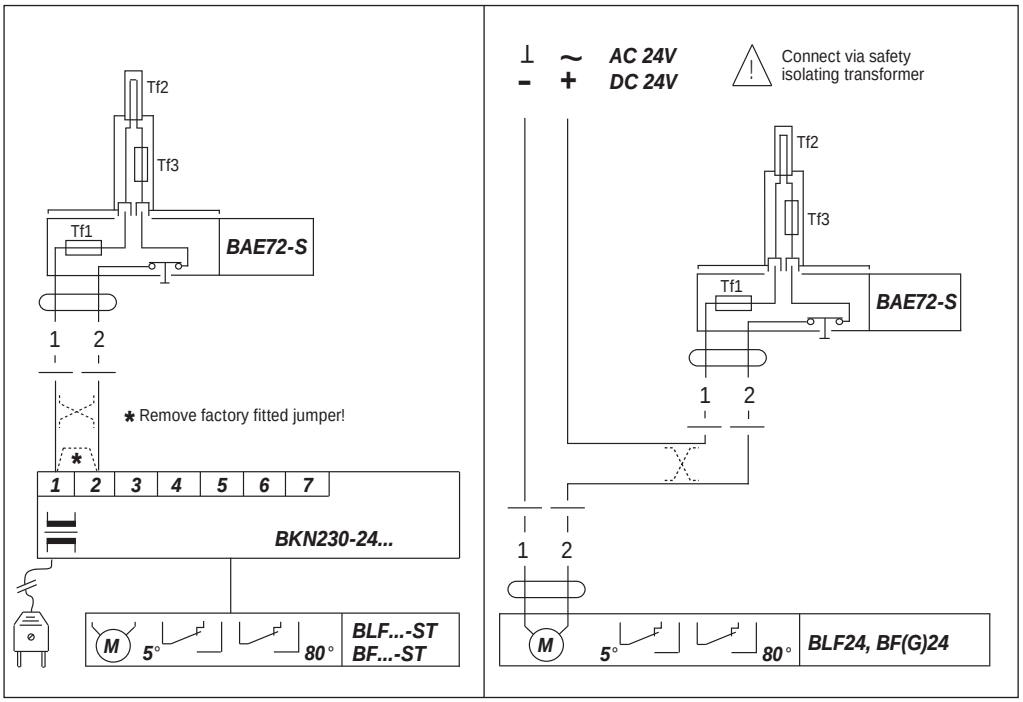

Dimensions [mm]

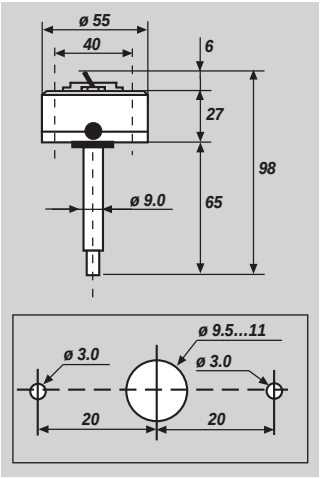

Spare parts:

Thermal trip Tf2/Tf3	***ZBAE72***
Thermal trip Tf2/95°C	***ZBAE95***

V1.2 01.01.2013 Subject to modification