OILTECH®
OLAER GROUP

The Professional Choice – in Fluid Management

LAC

With AC motor - optimized for industrial use

OLAER® OILTECH® OILAIR FCH

The Olaer Group is a global player specialising in innovative, efficient system solutions for temperature optimisation and energy storage.
All over the world, our products are working in the most diverse environments and applications, e.g. the aircraft, engineering, steel and mining industries, as well as in sectors such as oil and gas, contracting and transport, farming and forestry, renewable energy, etc.

LAC Air Oil Cooler

For industrial use - maximum cooling capacity 160 kW

The LAC air oil cooler with single-phase or three-phase AC motor is optimized for use in the industrial sector. Together with a wide range of accessories, the LAC cooler is suitable for installation in most applications and environments. The maximum cooling capacity is 160 kW at ETD 40°C. Choosing the right cooler requires precise system sizing. The most reliable way to size is with the aid of Oiltech's calculation program. This program, together with precise evaluations from our experienced, skilled engineers, gives you the opportunity for more cooling per € invested.

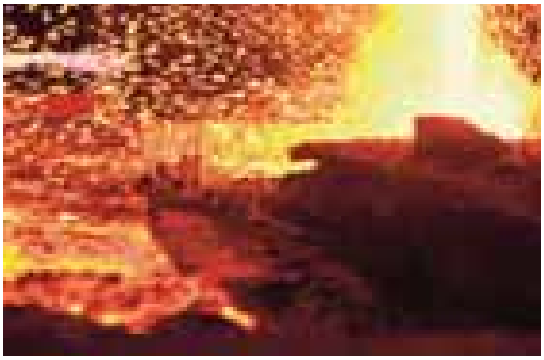

Overheating - an expensive problem

An under-sized cooling capacity produces a temperature balance that is too high. The consequences are poor lubricating properties, internal leakage, a higher risk of cavitation, damaged components, etc. Overheating leads to a significant drop in cost-efficiency and environmental consideration.

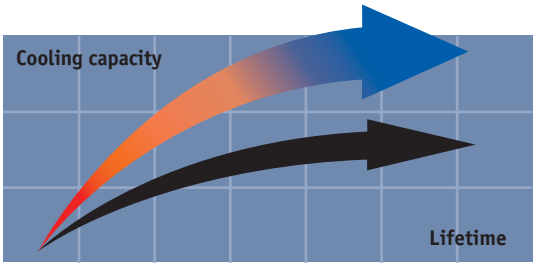

Temperature optimisation - a basic prerequisite for cost-efficient operation

Temperature balance in a hydraulic system occurs when the cooler can cool down the energy input that the system does not consume - the system's lost energy (Ploss = Pcool = Pin – Pused).
Temperature optimisation means that temperature balance occurs at the system's ideal working temperature – the temperature at which the oil's viscosity and the air content comply with recommended values. The correct working temperature produces a number of economic and environmental benefits:

- The hydraulic system's useful life is extended.
- The oil's useful life is extended.
- The hydraulic system's availability increases – more operating time and fewer shutdowns.
- Service and repair costs are reduced.
- High efficiency level maintained in continuous operation – the system's efficiency falls if the temperature exceeds the ideal working temperature.

Clever design and the right choice of materials and components produce a long useful life, high availability and low service and maintenance costs.

Compact design
and low weight.

Easy to maintain
and easy to retrofit in many applications.

Quiet
fan and fan motor.

AC motor single-phase for smaller and three-phase for larger cooler sizes.

Cooler matrix
with low pressure drop and high cooling capacity.

LAC-M and LAC-X

LAC air oil coolers are also available in two special versions, LAC-X (ATEX version), approved for applications where there may be an explosive environment above ground, and LAC-M, adapted to be able better to deal with corrosion attacks, for example in marine environments.

Calculate the cooling capacity requirement

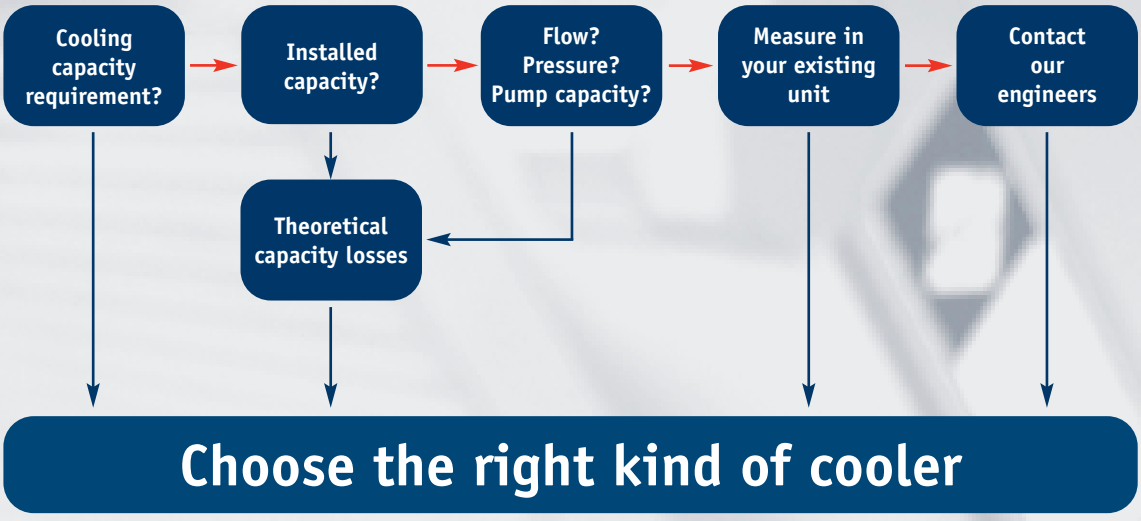

Enter your values...

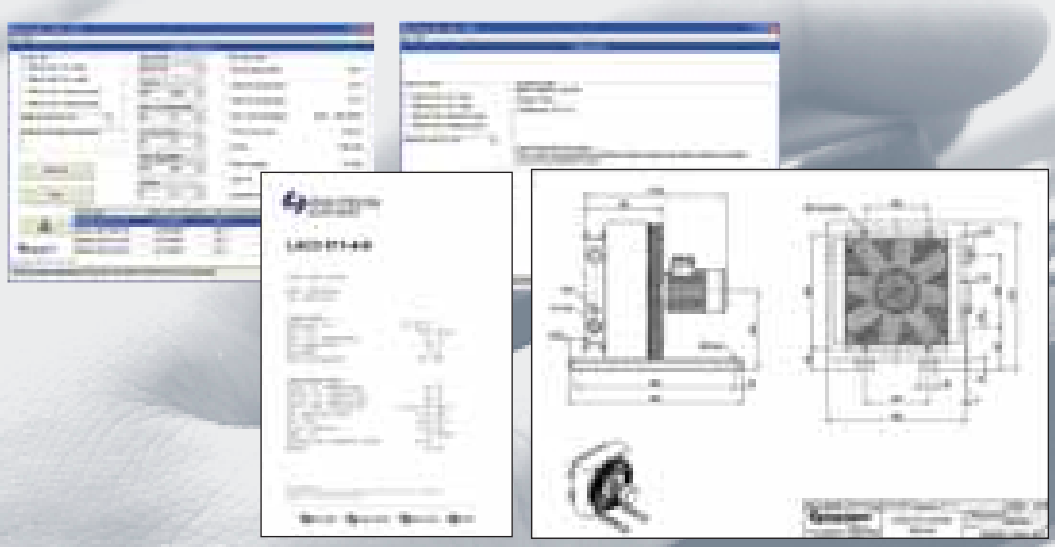

...suggested solution

Better energy consumption means not only less environmental impact, but also reduces operating costs, i.e. more cooling per € invested.

More cooling per €

with precise calculations and our engineers' support

Optimal sizing produces efficient cooling. Correct sizing requires knowledge and experience. Oiltech's calculation program, combined with our engineers' support, gives you access to this very knowledge and experience. The result is more cooling per € invested.
The user-friendly calculation program can be downloaded from Oiltech's website – www.oiltech.se.

Valuable system review into the bargain

A more wide-ranging review of the hydraulic system is often a natural element of cooling calculations. Other potential system improvements can then be discussed – e.g. filtering, offline or online cooling, etc. Contact us for further guidance and information.

Oiltech's quality and performance guarantee insurance for your operations and systems

A constant striving towards more cost-efficient and environmently-friendly hydraulic systems requires continuous development. Areas where we are continuously seeking to improve performance include cooling capacity, noise level, pressure drop and fatigue.

Meticulous quality and performance tests are conducted in Oiltech's laboratory. All tests and measurements take place in accordance with standardised methods - cooling capacity in accordance with EN1048, noise level ISO 3743, pressure drop EN 1048 and fatigue ISO 10771-1.
For more information about our standardised tests, ask for "Oiltech's blue book – a manual for more reliable cooler purchasing".

The cooling capacity curves are based on the inlet oil temperature and the ambient air temperature. An oil temperature of 60 °C and an air temperature of 20 °C produce a temperature difference of 40 °C. Multiply by kW/°C for total cooling capacity.

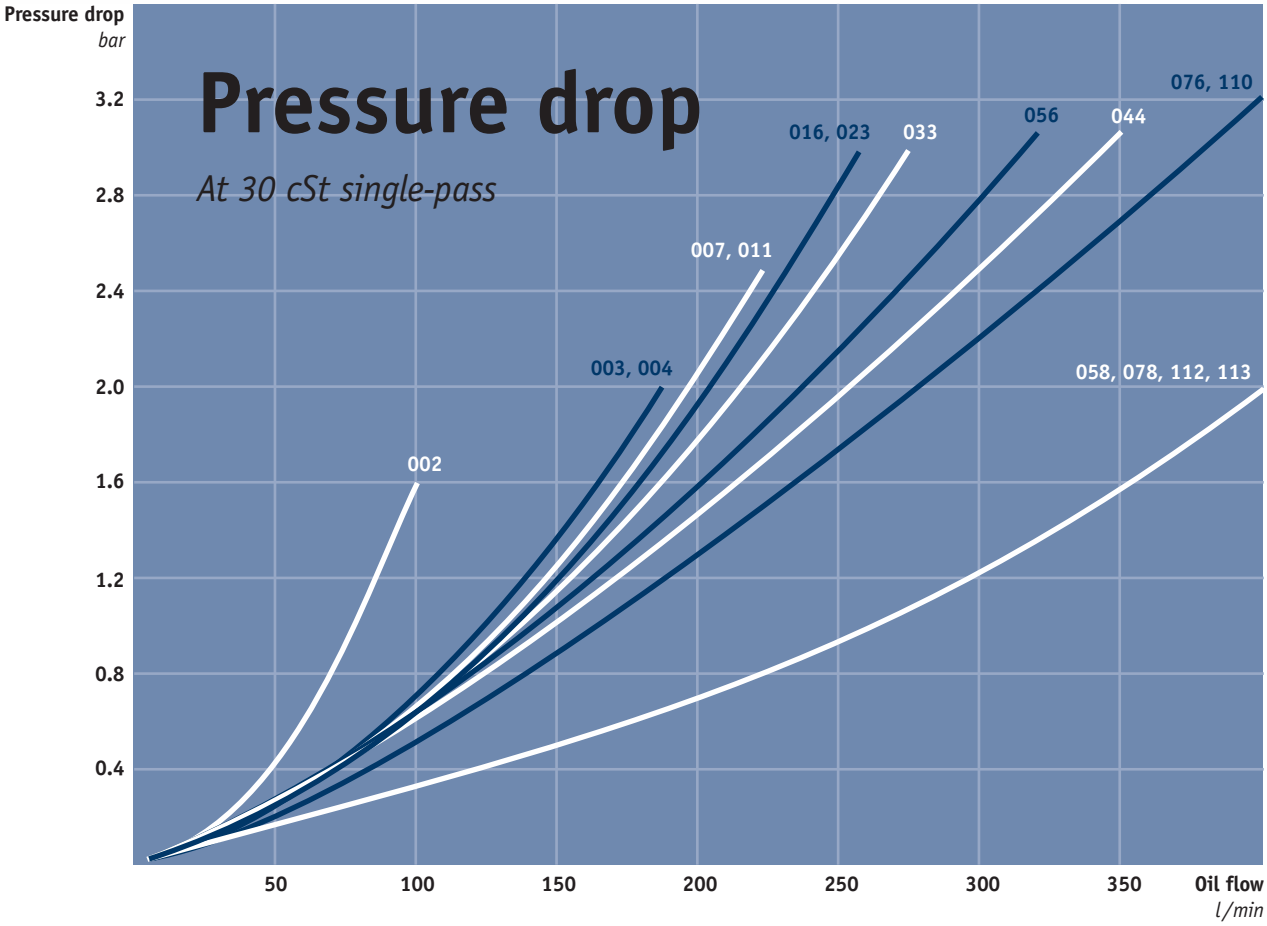

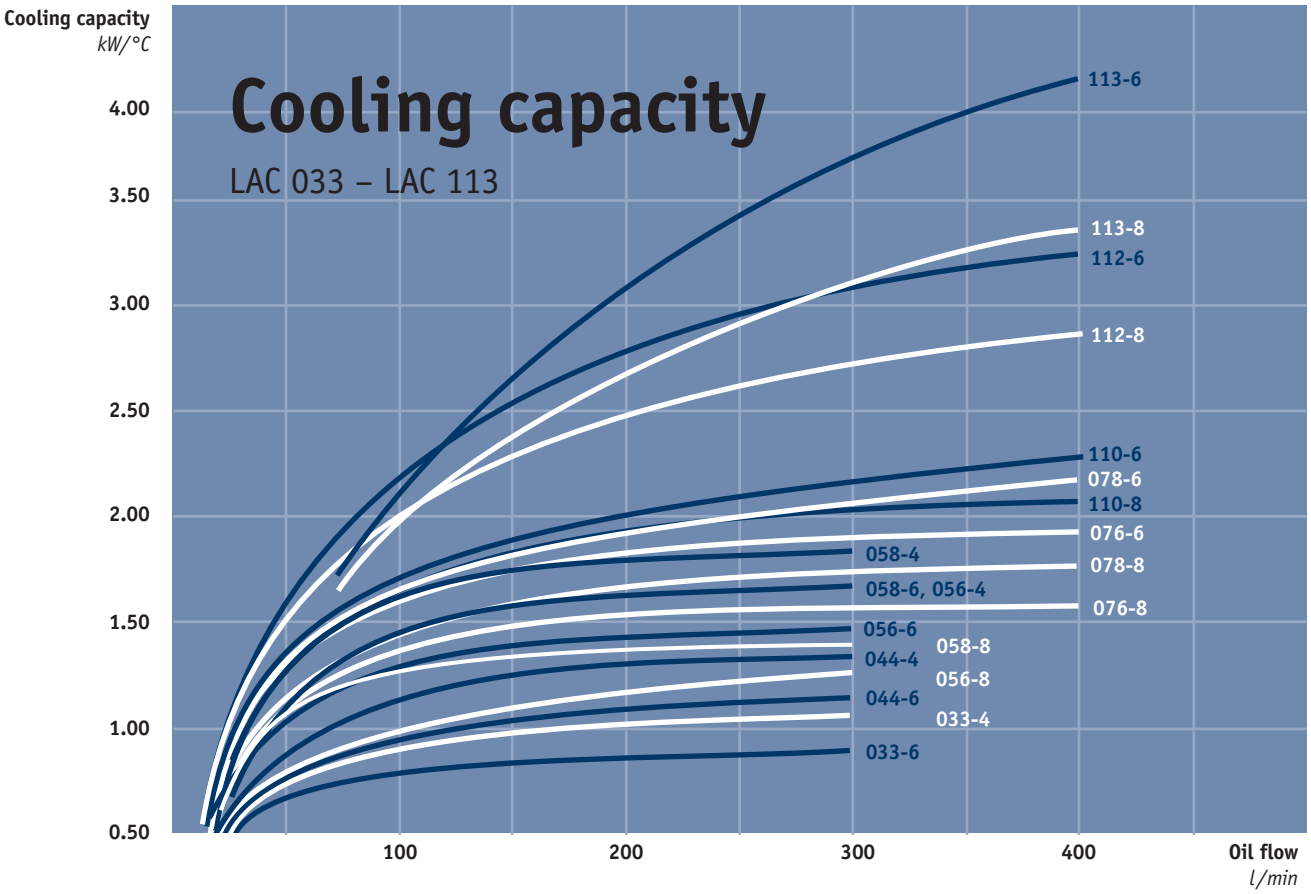
Cooling capacity
kW/°C
Cooling capacity
LAC 033 – LAC 113
4.00
3.50
3.00
2.50
2.00
1.50
1.00
0.50
100
200
300
400
Oil flow
l/min
113-6
113-8
112-6
112-8
110-6
078-6
110-8
076-6
058-4
078-8
058-6, 056-4
076-8
056-6
058-8
044-4
056-8
044-6
033-4
033-6

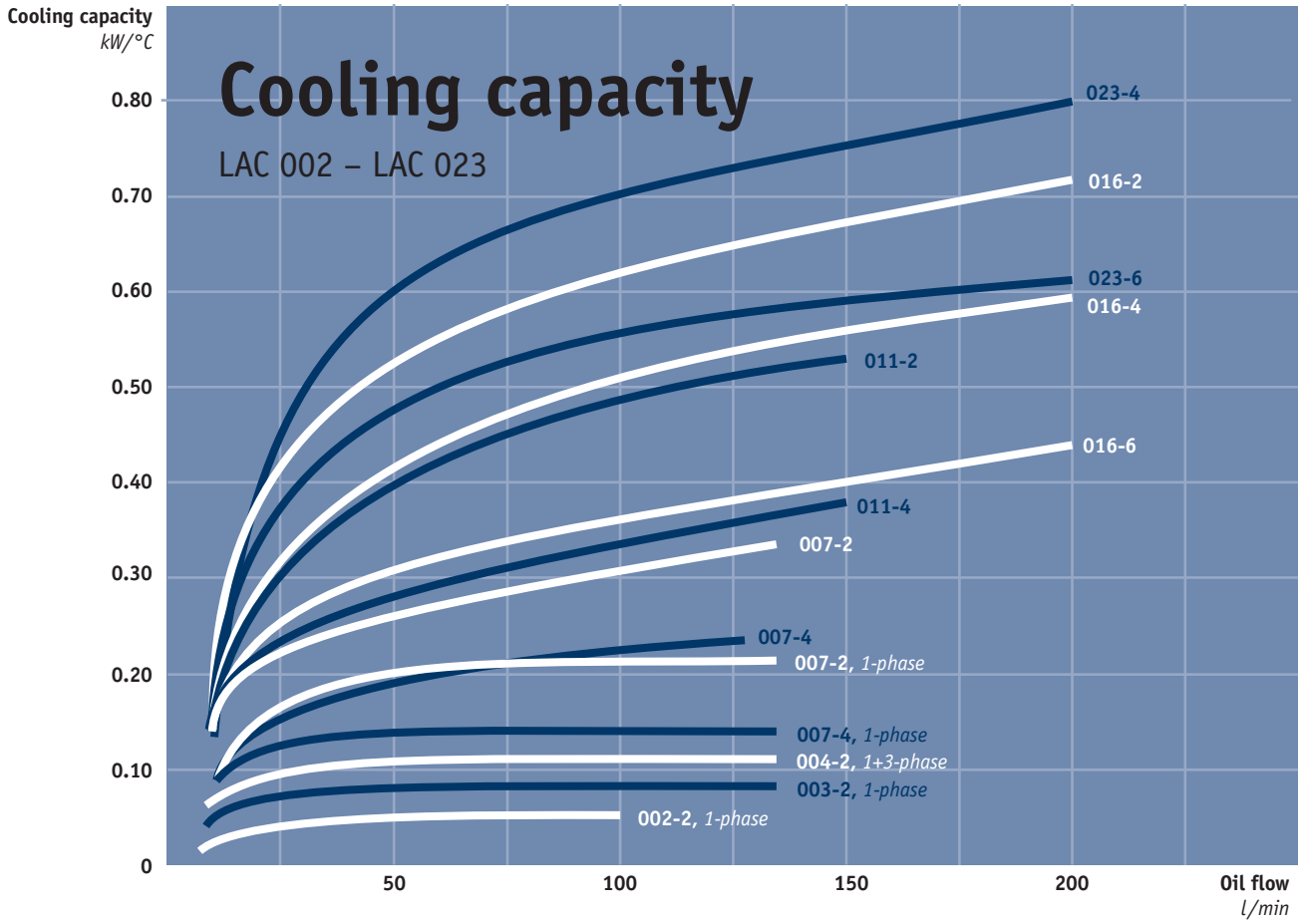
Cooling capacity
kW/°C
Cooling capacity
LAC 002 – LAC 023
0.80
0.70
0.60
0.50
0.40
0.30
0.20
0.10
0
50
100
150
200
Oil flow
l/min
023-4
016-2
023-6
016-4
011-2
016-6
011-4
007-2
007-4
007-2, 1-phase
007-4, 1-phase
004-2, 1+3-phase
003-2, 1-phase
002-2, 1-phase

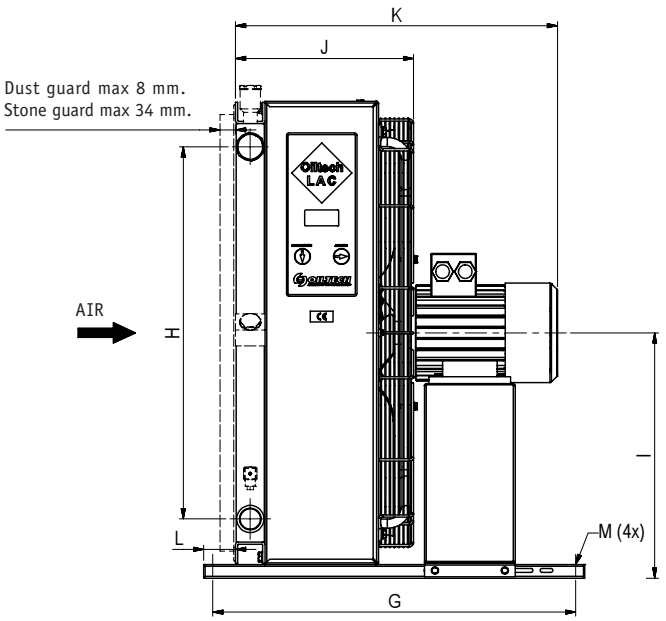

TYPE		Acoustic pressure level L_pA dB(A) 1m*	No. of poles/ Capacity kW	Weight kg (approx)	
LAC	002-2-single-phase	50	2-0.05	4	
LAC	003-2-single-phase	61	2-0.05	5	
LAC	004-2-single-phase	63	2-0.07	6	
LAC	004-2-three-phase	63	2-0.07	6	
LAC	007-4-single-phase	65	2-0.08	9	
LAC	007-2-single-phase	79	2-0.24	10	
LAC2	**007-4-three-phase**	**62**	**4-0.25**	**15**	
LAC2	**007-2-three-phase**	**79**	**2-0.55**	**16**	
LAC2	**011-4-three-phase**	**67**	**4-0.25**	**20**	
LAC2	**011-2-three-phase**	**82**	**2-1.10**	**25**	
LAC2	**016-6-three-phase**	**60**	**6-0.18**	**23**	
LAC2	**016-4-three-phase**	**70**	**4-0.37**	**24**	
LAC2	**016-2-three-phase**	**86**	**2-1.10**	**27**	
LAC2	**023-6-three-phase**	**64**	**6-0.18**	**35**	
LAC2	**023-4-three-phase**	**76**	**4-0.75**	**36**	
LAC	033-6-three-phase	74	6-0.55	45	
LAC	033-4-three-phase	84	4-2.20	52	
LAC	044-6-three-phase	76	6-0.55	63	
LAC	044-4-three-phase	85	4-2.20	65	
LAC	056-8-three-phase	73	8-0.55	73	
LAC	056-6-three-phase	81	6-1.50	75	
LAC	056-4-three-phase	84	4-2.20	75	
LAC	058-8-three-phase	74	8-0.55	80	
LAC	058-6-three-phase	82	6-1.50	82	
LAC	058-4-three-phase	85	4-2.20	82	
LAC	076-8-three-phase	79	8-1.10	130	
LAC	076-6-three-phase	86	6-2.20	140	
LAC	078-8-three-phase	80	8-1.10	136	
LAC	078-6-three-phase	87	6-2.20	146	
LAC	110-8-three-phase	84	8-2.20	160	
LAC	110-6-three-phase	90	6-5.50	170	
LAC	112-8-three-phase	85	8-2.20	168	
LAC	112-6-three-phase	91	6-5.50	178	
LAC	113-8-three-phase	86	8-2.20	218	
LAC	113-6-three-phase	92	6-5.50	237	

** = Noise level tolerance ± 3 dB(A)*

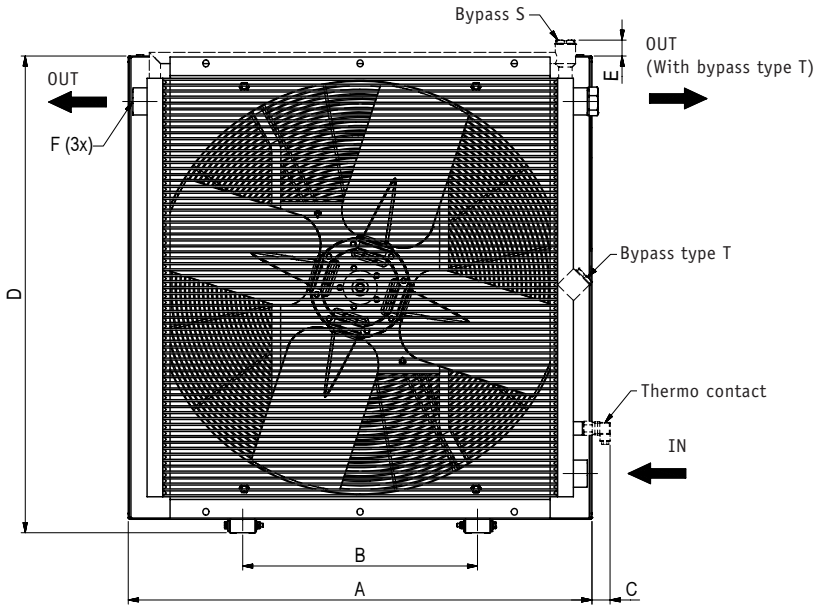

TYPE		A	B	C	D	E	F	G	H	I	J	K	L	M ∅
LAC	002-2-single-phase	155	74	68	186	-	G½	186	72	99	92	153	37	9
LAC	003-2-single-phase	210	134	68	223	73	G1	145	90	118	112	225	27	9
LAC	004-2-single-phase	250	134	68	259	66	G1	145	90	131	117	230	27	9
LAC	004-2-three-phase	250	134	68	259	66	G1	145	90	131	117	230	27	9
LAC	007-4-single-phase	340	203	64	343	52	G1	267	160	213	135	252	56	9
LAC	007-2-single-phase	340	203	64	343	52	G1	267	160	213	135	252	56	9
LAC2	**007-4-three-phase**	**365**	**203**	**64**	**395**	**42**	**G1**	**510**	**160**	**213**	**225**	**429**	**50**	**9**
LAC2	**007-2-three-phase**	**365**	**203**	**64**	**395**	**42**	**G1**	**510**	**160**	**213**	**225**	**434**	**50**	**9**
LAC2	**011-4-three-phase**	**440**	**203**	**62**	**470**	**41**	**G1**	**510**	**230**	**250**	**249**	**453**	**50**	**9**
LAC2	**011-2-three-phase**	**440**	**203**	**62**	**470**	**41**	**G1**	**510**	**230**	**250**	**249**	**475**	**50**	**9**
LAC2	**016-6-three-phase**	**496**	**203**	**66**	**526**	**46**	**G1**	**510**	**230**	**278**	**272**	**474**	**50**	**9**
LAC2	**016-4-three-phase**	**496**	**203**	**66**	**526**	**46**	**G1**	**510**	**230**	**278**	**272**	**479**	**50**	**9**
LAC2	**016-2-three-phase**	**496**	**203**	**66**	**526**	**46**	**G1**	**510**	**230**	**278**	**272**	**496**	**50**	**9**
LAC2	**023-6-three-phase**	**580**	**356**	**63**	**610**	**44**	**G1**	**510**	**305**	**320**	**287**	**489**	**50**	**9**
LAC2	**023-4-three-phase**	**580**	**356**	**63**	**610**	**44**	**G1**	**510**	**305**	**320**	**287**	**511**	**50**	**9**
LAC	033-6-three-phase	692	356	53	722	42	G1¼	510	406	376	318	534	50	9
LAC	033-4-three-phase	692	356	53	722	42	G1¼	510	406	376	318	618	50	9
LAC	044-6-three-phase	692	356	53	866	59	G1¼	510	584	448	343	559	50	9
LAC	044-4-three-phase	692	356	53	866	59	G1¼	510	584	448	343	643	50	9
LAC	056-8-three-phase	868	356	49	898	43	G1¼	510	584	448	343	643	50	9
LAC	056-6-three-phase	868	508	49	898	43	G1¼	510	584	464	368	668	50	9
LAC	056-4-three-phase	868	508	49	898	43	G1¼	510	584	464	368	668	50	9
LAC	058-8-three-phase	868	508	49	898	43	G2	510	584	464	388	652	30	9
LAC	058-6-three-phase	868	508	49	898	43	G2	510	584	464	388	682	30	9
LAC	058-4-three-phase	868	508	49	898	43	G2	510	584	464	388	688	30	9
LAC	076-8-three-phase	1022	518	41	1052	45	G1½	800	821	541	393	693	70	14
LAC	076-6-three-phase	1022	518	41	1052	45	G1½	800	821	541	393	710	70	14
LAC	078-8-three-phase	1022	518	41	1052	45	G2	800	821	541	413	713	50	14
LAC	078-6-three-phase	1022	518	41	1052	45	G2	800	821	541	413	730	50	14
LAC	110-8-three-phase	1185	600	54	1215	45	G2	800	985	623	418	785	70	14
LAC	110-6-three-phase	1185	600	54	1215	45	G2	800	985	623	418	785	70	14
LAC	112-8-three-phase	1185	600	54	1215	45	G2	800	985	623	438	805	50	14
LAC	112-6-three-phase	1185	600	54	1215	45	G2	800	985	623	438	805	50	14
LAC	113-8-three-phase	1200	600	82	1215	45	G2	860	985	623	465	833	82	14
LAC	113-6-three-phase	1200	600	82	1215	45	G2	860	985	623	465	871	82	14

Key for LAC and LAC2 air oil coolers

All positions must be filled in when ordering.

EXAMPLE:

LAC2 - 016 - 6 - A - 50 - T20 - D - 0
1 2 3 4 5 6 7 8

1. AIR OIL COOLER WITH AC MOTOR = LAC / LAC2

2. COOLER SIZE

002, 003, 004, 007, 011, 016, 023, 033, 044, 056, 058, 076, 078, 110, 112, 113	

3. NUMBER OF POLES, MOTOR

2-pole	= 2
4-pole	= 4
6-pole	= 6
8-pole	= 8

4. VOLTAGE AND FREQUENCY

No motor	= 0
Three-phase 220-240/380-420 V 50 Hz*	= A
Three-phase 440-480 V 60 Hz*	= B
Single-phase 230 V 50/60 Hz**	= C
Three-phase 220-240/380-420 V 50 Hz 440/480 V 60 Hz***	= D
Three-phase 500 V 50 Hz	= E
Three-phase 400/690 V 50 Hz 440-480 V 60 Hz	= F
Three-phase 525 V 50 Hz	= G
Motor for special voltage (stated in plain language)	= X

** = for LAC 033 to LAC 113, ** = contact us for frequency 60 Hz*
**** = for LAC 007 to LAC 023*

5. THERMO CONTACT

No thermo contact	= 00
40 °C	= 40
50 °C	= 50
60 °C	= 60
70 °C	= 70
80 °C	= 80
90 °C	= 90

6. COOLER MATRIX

Standard	= 000
Two-pass	= T00
Built-in, pressure-controlled bypass, single-pass	
2 bar	= S20
5 bar	= S50
8 bar	= S80
Built-in, pressure-controlled bypass, two-pass*	
2 bar	= T20
5 bar	= T50
8 bar	= T80
Built-in temperature and pressure-controlled bypass, single-pass	
50 °C, 2.2 bar	= S25
60 °C, 2.2 bar	= S26
70 °C, 2.2 bar	= S27
90 °C, 2.2 bar	= S29
Built-in temperature and pressure-controlled bypass, two-pass*	
50 °C, 2.2 bar	= T25
60 °C, 2.2 bar	= T26
70 °C, 2.2 bar	= T27
90 °C, 2.2 bar	= T29

** = not for Oiltech LAC 002 - LAC 004*

7. MATRIX GUARD

No guard	= 0
Stone guard	= S
Dust guard	= D
Dust and stone guard	= P

8. STANDARD/SPECIAL

Standard	= 0
Special	= Z

Technical specification

FLUID COMBINATIONS

Mineral oil	HL/HLP in accordance with DIN 51524
Oil/water emulsion	HFA, HFB in accordance with CETOP RP 77H
Water glycol	HFC in accordance with CETOP RP 77H
Phosphate ester	HFD-R in accordance with CETOP RP 77H

MATERIAL

Cooler matrix	Aluminum
Fan blades/hub	Glass fibre reinforced polypropylene/ Aluminum
Fan housing	Steel
Fan guard	Steel
Other parts	Steel
Surface treatment	Electrostatically powder-coated

COOLER MATRIX

Maximum static working pressure	21 bar
Dynamic working pressure	14 bar*
Heat transfer tolerance	±6 %
Maximum oil inlet temperature	120 °C

** Tested in accordance with ISO/DIS 10771-1*

3-PHASE MOTOR

3-phase asynchronous motors in accordance with IEC 60034-1 and IEC 60072 in accordance with DIN 57530/VDE 0530

Insulation class	F
Rise of temperature	B
Protection class	IP 55

1-PHASE MOTOR

Insulation class	B
Rise of temperature	B
Protection class	IP 44

3-PHASE MOTOR LAC 004

Rated voltage	230/400V 50/60 Hz
Insulation class	B
Rise of temperature	B
Protection class	IP 44

COOLING CAPACITY CURVES

The cooling capacity curves in this technical data sheet are based on tests in accordance with EN 1048 and have been made using oil type ISO VG 46 at 60 °C.

CONTACT OILTECH FOR ADVICE ON

- Oil temperatures > 120 °C
- Oil viscosity > 100 cSt
- Aggressive environments
- Ambient air rich in particles
- High-altitude locations

With our specialist expertise, industry knowledge and advanced technology,
we can offer a range of different solutions for coolers and accessories to meet your requirements.

Take the next step

– choose the right accessories

Supplementing a hydraulic system with a cooler, cooler accessories and an accumulator gives you increased availability and a longer useful life, as well as lower service and repair costs. All applications and operating environments are unique. A well-planned choice of the following accessories can thus further improve your hydraulic system. Please contact us for guidance and information.

Pressure-controlled bypass valve *Integrated*

Guides the oil past the cooler matrix if the pressure drop is too high. Reduces the risk of the cooler bursting, e.g. in connection with cold starts and temporary peaks in pressure or flow. Available for single-pass or two-pass matrix design.

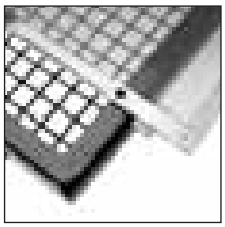

Stone guard/Dust guard

Protects components and systems from tough conditions.

Temperature-controlled bypass valve *Integrated*

Same function as the pressure-controlled bypass valve, but with a temperature-controlled opening pressure – the hotter the oil, the higher the opening pressure. Available for single-pass or two-pass matrix design.

Lifting eyes

For simple installation and relocation.

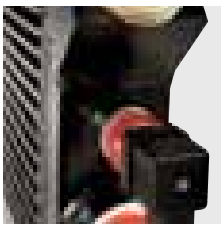

Thermo contact

Transmitter with fixed temperature indication. For temperature warnings, and for more cost-efficient operation and better environmental consideration through the automatic switching on and off of the fan motor.

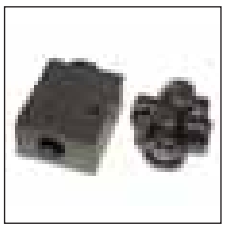

Temperature-controlled 3-way valve *External*

Same function as the temperature-controlled bypass valve, but positioned externally.

Note: must be ordered separately.

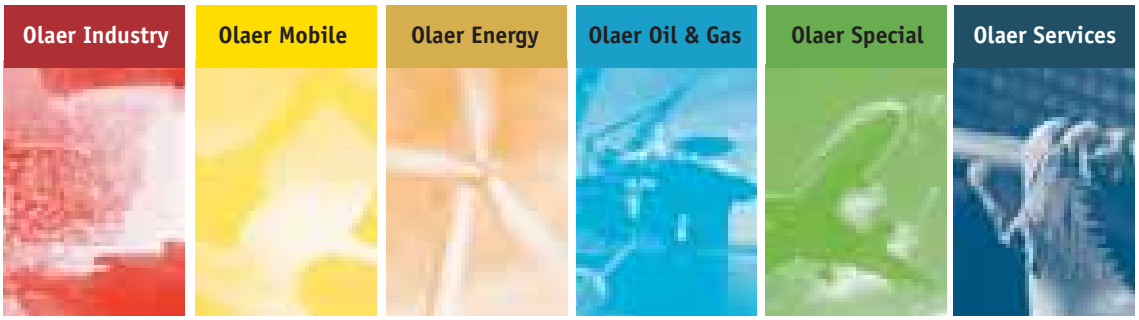

Production / © Micce Rylander Byra

The Olaer Group develops, manufactures and markets products and systems in six business areas.

Global perspective

and local entrepreneurial flair

The Olaer Group is a global player specialising in innovative, efficient system solutions for temperature optimisation and energy storage.
The Group develops, manufactures and markets products and systems for a number of different sectors, e.g. the aircraft, engineering, steel and mining industries, as well as for sectors such as oil and gas, contracting and transport, farming and forestry, renewable energy, etc.
All over the world, our products operate in the most diverse environments and applications. One constantly repeated demand in the market is for optimal energy storage and temperature optimisation.
We work at a local level with the whole world as our workplace – local entrepreneurial flair and a global perspective go hand in hand.
Our local presence, long experience and a wealth of knowledge combined with our cutting-edge expertise to give you the best possible conditions for making a professional choice.

OLAER® GROUP

The Professional Choice – in Fluid Management

Olaer Group Network

OLAER® OILTECH® OILAIR FCH