Electric and electronic rotary gear motor series AR2..., AR2...E

AR2 gear motors are specially designed to be installed in industrial combustion plants and are particularly suitable to control modulating valves, ball valves, butterfly dampers and other devices for the regulation of fluids in air conditioning and heating systems.

AR2 electric motor is bidirectional with high static and maintaining torque, for 2 or 3 position operation. AR2 electronic version is controlled by analogical input signal in current or voltage and on request with output signal in current or voltage.

Actuators of the series AR2 have the certificate CE and EMC Electromagnetic Compatibility.



TECHNICAL FEATURES

Body and cover	Die-casted aluminium	**Supply voltage**	230V ac, 115V ac, 24V ac 50-60 Hz
Nominal torque	4÷20 Nm	**On request**	24V dc
Maintaining torque	4÷20 Nm	**Power consumption**	4 - 7 VA
Rotation time	7.5, 15, 30, 60 s, for 90°	**Input signal**	4÷20 mA or 0÷10V dc
Rotation angle	Standard 90°	**Output signal**	4÷20 mA or 0÷10V dc
On request	From 20 ÷ 180°	**Duty cycle**	Continuos 100% ED
Output shaft	9,5 mm □	**End / Aux. switches rating**	0,5 A / 48V dc and ac
Ambient temperature	-10÷ +60 °C	**Cable gland**	2 x Pg 13,5
Enclosure	IP54 acc. IEC 529, IP65 on request	**Weight**	~ 2,5 Kg

FEATURES

- Versatile installation in any position allows easy fitting to existing equipments
- Interchangeability with the most available gear motors
- Sturdy compact, balanced design, suitable for industrial applications
- External position indicator
- no 2 end switches + no 2 adjustable auxiliary microswitches with free electric contacts
- Manual/automatic control station and relay for phase cut
- Wide range of accessories on request:
  - 1 or 2 potentiometer - range: 150 ohm to 2.5 kohm
  - Multipolar connectors for easy plug-in electric wiring
  - Auxiliary extended drive shaft Ø 8 mm or □ 9,5 mm (max. 3 Nm)
  - 160°, 180° or clockwise rotation on request

MODELS

Models	Rated and maintenance torque (Nm)	Rotation time for 90° (50 Hz)	Power consumption (VA)	Weight (Kg)
AR2C0000	4	7 s	7	2,5
AR2C1000	7	15 s		
AR2C2000	15 / 11	30 s		
AR2C3000	20	60 s		

AR2 = Gear motor

Supply voltage (50 - 60 Hz)
A = 24V ac ± 10%
B = 115V ac + 6% - 10%
C = 230V ac + 6% - 10%
B / A = With transformer 115V / 24V ac ~
C / A = With transformer 230V / 24V ac ~

Rotation times for 90° at 50Hz
0 = 7,5 s
1 = 15 s
2 = 30 s
3 = 60 s

Feedback potentiometer
00 = Not foreseen
11 = 150 ohm
13 = 1 kohm
15 = 2,5 kohm
16 = 5 kohm (Spectrol)
18 = 1 kohm (Spectrol)
25 = n. 2 Pot. 2,5 kohm

Auxiliary microswitches
0 = None
2 = nr. 2 switches

Accessories
M = Multipolar connectors
16 = 160° rotation
18 = 180° rotation
S = Control statio auto/man an all models
A1 = Auxiliary shaft Ø 8 mm
A2 = Auxiliary shaft 9,5 mm square
F3 = Flange F3
F4 = Flange F4
DX = Clockwise rotation
R1 = Relay control (ON/OFF)
Z = Enclosure IP65

Control signal
E1 = Input 0÷10V dc, output 0÷10V dc
E2 = Input 0÷10V dc or 4÷20 mA, output 0÷10V dc
E4 = Input 0÷10V dc
E5 = Input 4÷20 mA
E7 = Input 4÷20 mA , output 0÷10V dc
E8 = Input 4÷20 mA , output 4÷20 mA

AR2	C	2	15	2	S18	E2

WIRING DIAGRAM

ELECTRIC FLOATING

SCHEMA S4
FORM 940905

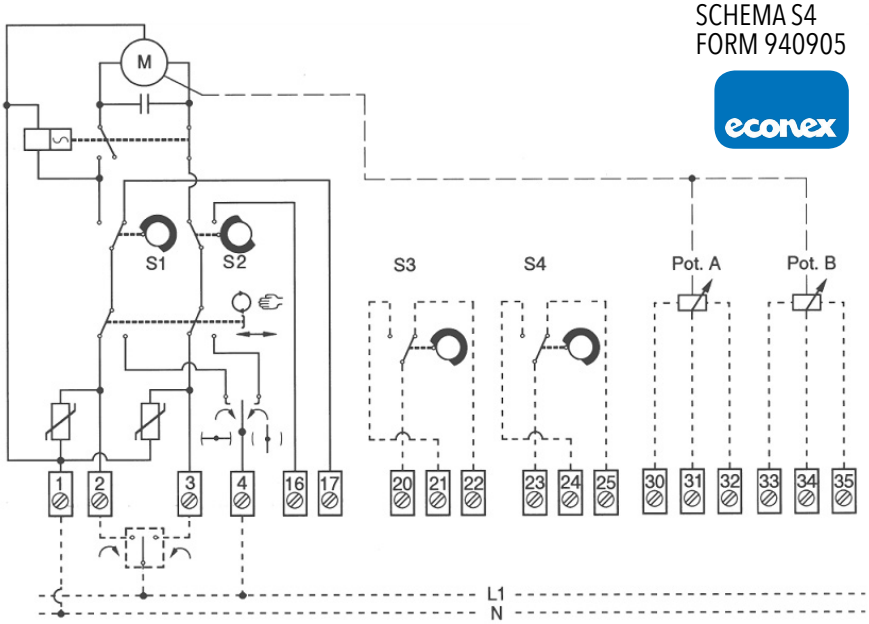

ELECTRONIC ANALOGIC VERSION 24V

SCHEMA GT 88 CG/2
FORM 07/13

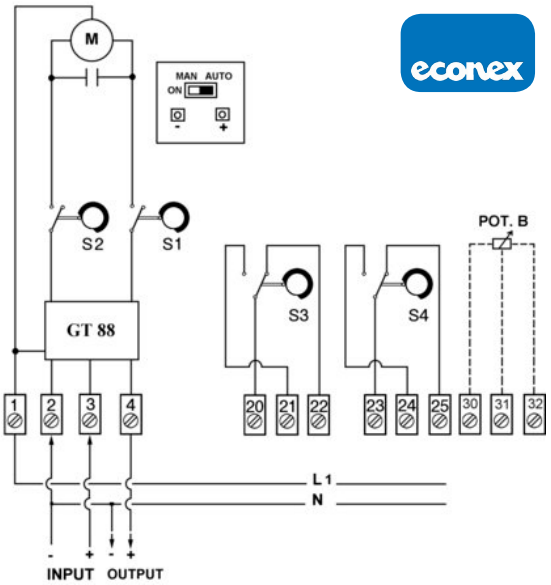

ELECTRONIC ANALOGIC VERSION 115 - 230V

SCHEMA GT 88 CG/2 - 1
FORM 14/14

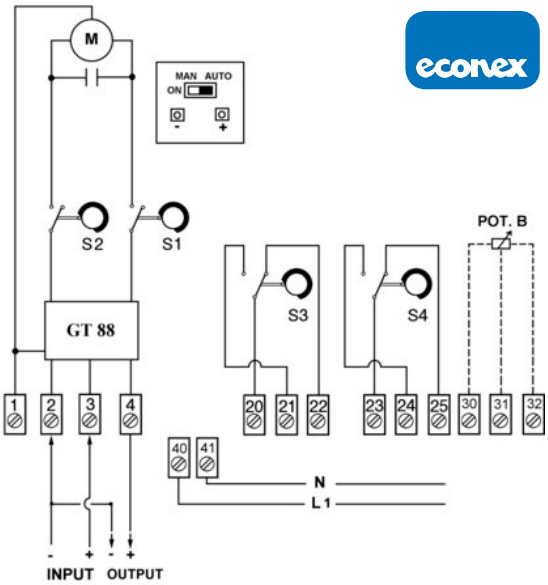

CAM ADJUSTAMENT

Use the proper lever supplied with the gear motor equipment for cam adjustment. Use the lever from the right side, introducing the pin into one of the bores on the sides of the blue cam and lever it to the desired position. If the blue cam is in a behind position, use the lever on its curved side to move the blue cam to a more suitable position to perform adjustment. Adjustment is possible in both directions along the whole rotation angle of the cam shaft. Remove the lever before servicing.



DIMENSIONS

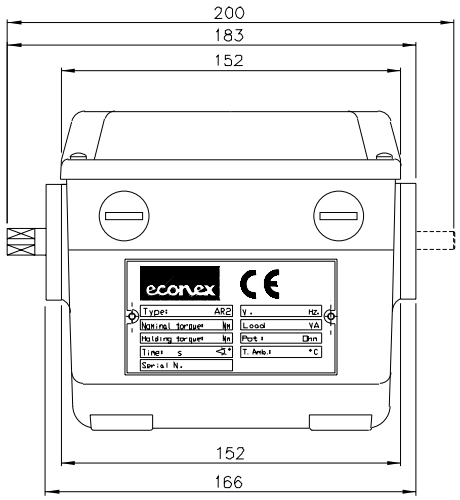

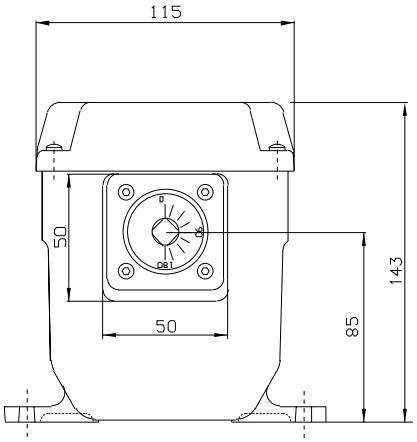

FLANGE F4

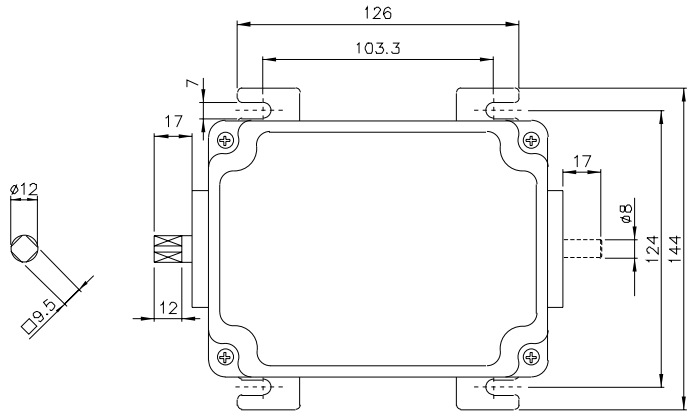

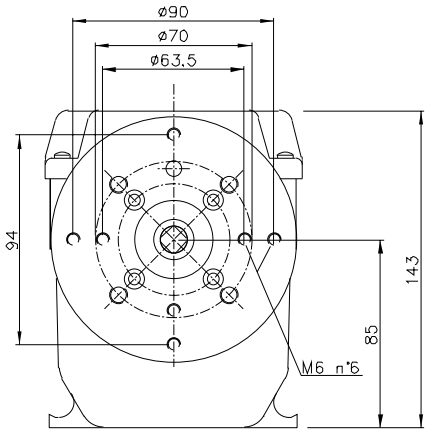

All the reported data are subject to be changed without notice.

from 140906

econex
Econex s.r.l. - Via Francesco De Sanctis, 53 - I-20141 Milano
Tel. +39 0289502912 - Fax +39 028463084 - www.econex.it - info@econex.it