Photoelectric Sensors

BOS 18M-PA-ID20-S4
Order Code: BOS01EY

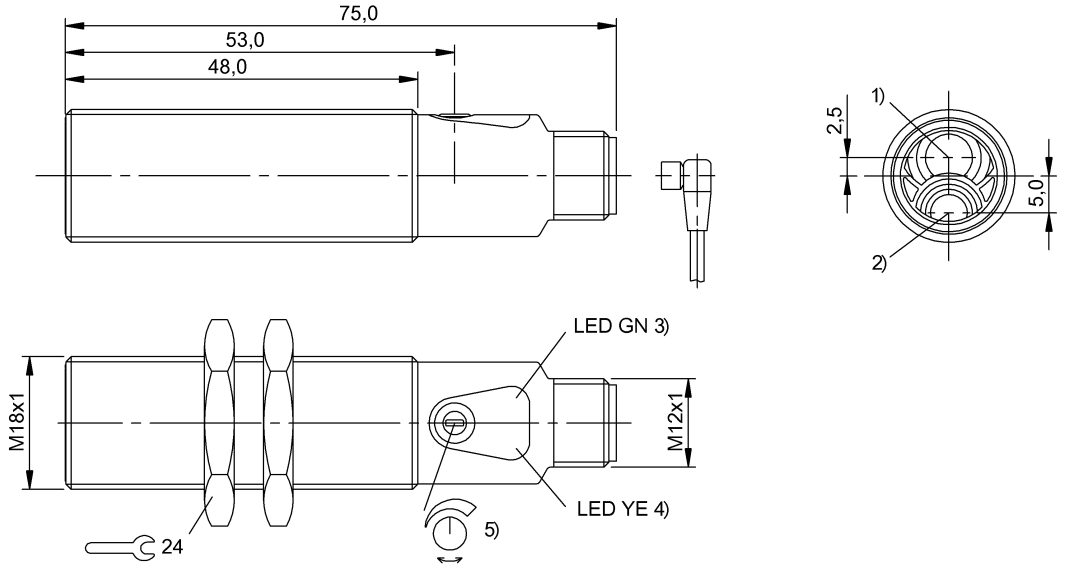

1) Optical axis receiver, 2) Optical axis emitter, 3) Operating voltage, 4) Light reception/limit area, 5) Sn

Basic features

Approval/Conformity	cULus CE UKCA WEEE
Basic standard	IEC 60947-5-2
Principle of operation	Photoelectric sensor
Scope of delivery	2x nut M18x1 User manual
Series	18M
Style	Cylinder Straight optics

Display/Operation

Adjuster	1-turn potentiometer
Display	LED green: Power Error - LED green, flashing LED yellow: Light received Limit range - LED yellow, flashing
Setting	Rated switching distance (Sn)

Electrical connection

Connection	Connector, M12x1-Male, 4-pin
Contact, surface protection	Gold plated
Polarity reversal protected	yes
Protection against device mix-ups	yes
Short-circuit protection	yes

Electrical data

Load capacitance max. at Ue	0.2 µF
No-load current Io max. at Ue	25 mA
Operating voltage Ub	10...30 VDC
Protection class	II
Rated insulation voltage Ui	75 V DC
Rated operating current Ie	100 mA
Rated operating voltage Ue DC	24 V
Ready delay tv max.	20 ms
Residual current Ir max.	30 µA
Ripple max. (% of Ue)	15 %
Switching frequency	800 Hz
Turn-off delay toff max.	0.63 ms
Turn-on delay ton max.	0.63 ms
Utilization category	DC -13
Voltage drop Ud max. at Ie	2.5 V

Environmental conditions

Ambient temperature	-5...55 °C
Contamination scale	3
EN 60068-2-27, Shock	Half-sinus, 30 g_n, 11 ms, 3x6 Half-sinus, 100 gn, 2 ms, 3x8000
EN 60068-2-6, Vibration	10...55 Hz, amplitude 1 mm, 3x30 min 10...2000 Hz, amplitude 1 mm, 30 gn, 3x5 h
IP rating	IP67

Photoelectric Sensors

BOS 18M-PA-ID20-S4
Order Code: BOS01EY

Functional safety

MTTF (40 °C)	872 a

Interface

Switching output	PNP normally closed (NC) PNP normally open (NO) Pins 4-2

Material

Housing material	Brass, nickel-plated
Housing material, surface protection	nickel-plated
Material sensing surface	Glass, anti-glare
Surface protection	nickel-plated

Mechanical data

Dimension	Ø 18 x 75 mm
Mounting part	Nut M18x1
Tightening torque max.	15 Nm 30 Nm

Optical features

Ambient light max.	5000 Lux
Beam characteristic	Divergent
LED group per IEC 62471	Exempt Group
Light spot size	Ø 50 mm at 600 mm
Light type	LED infrared
Principle of optical operation	Diffuse sensor, energetic
Switching function, optical	Light-on dark-on
Wave length	850 nm

Range/Distance

Hysteresis H max. (% of Sr)	10.0 %
Range	1...800 mm
Rated operating distance Sn	800 mm, Adjustable
Temperature drift max. (% of Sr)	10 %

Remarks

Order accessories separately.
For additional information, refer to user's guide.
Reference object (target): gray card, 200 x 200, 90 % remission, axial approach.
The sensor is functional again after the overload has been eliminated.
For more information about MTTF and B10d see MTTF / B10d Certificate

Indication of the MTTF- / B10d value does not represent a binding composition and/or life expectancy assurance; these are simply experiential values with no warranty implications. These declared values also do not extend the expiration period for defect claims or affect it in any way.

Connector Drawings



Wiring Diagrams (Schematic)

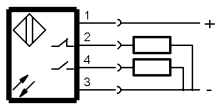

Opto Symbols

