Rotary joint

model
WRA

Single rotary flange | 25MPa



Single rotary with flange is a compact type rotary joint with mounting section of the body shaped in the form of flange to keep the overall height low. Four types are available with 2 to 8 circuits, and each circuit can be used independently. Fluid should be supplied from flange side of the body with manifold piping.

Low starting torque

Special seal with lower resistance has been adopted to minimize sliding friction to realize low starting torque.

Usable for both oil and air

Superior sealing capability of special seal can be utilized not only for hydraulic circuits but also for air circuits.

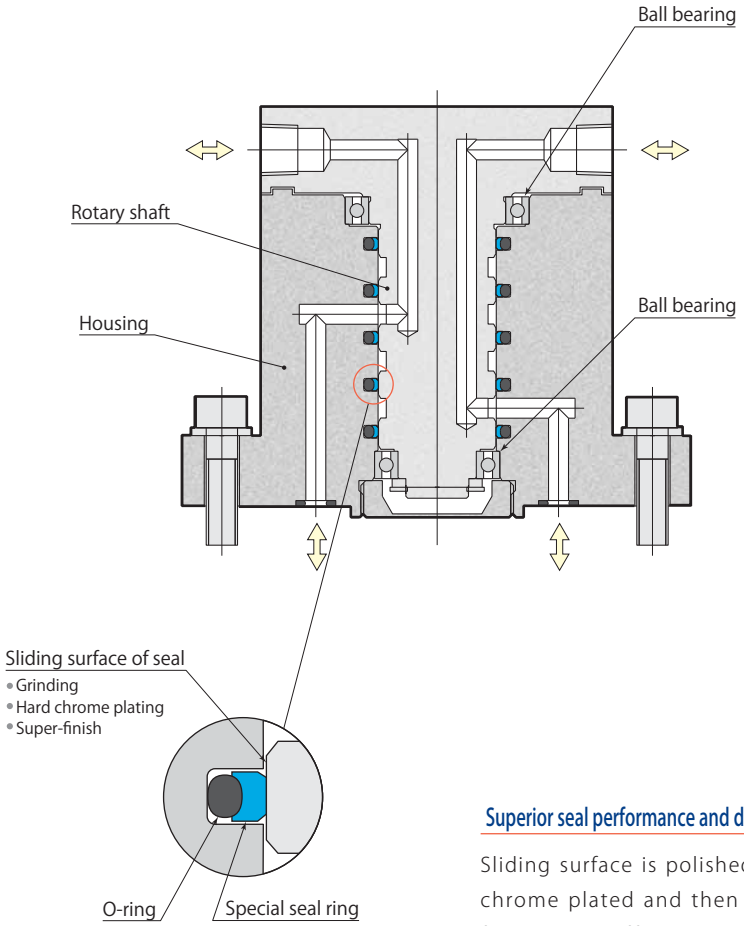

Superior seal performance and durability

Sliding surface is polished, hard chrome plated and then super-finished to offer superior seal performance and durability.

2 circuits

WRA2F

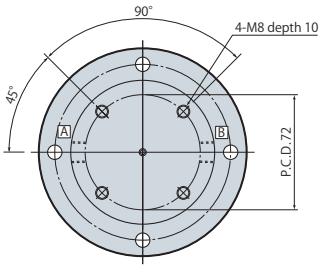

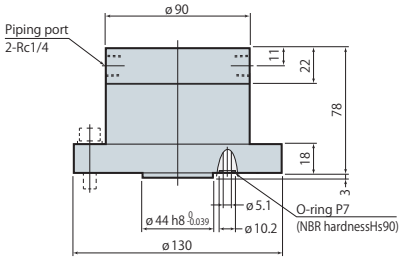

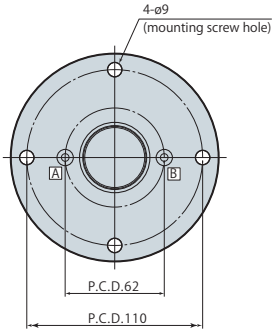

Each piping port is marked with code A or B.
The mounting surface finish must be no rougher than Rz6.3 (ISO4287:1997).

Specifications

Model	WRA2F	WRA4F	WRA6F	WRA8F
Number of circuits	2 circuits	4 circuits	6 circuits	8 circuits
Fluid used	General mineral based hydraulic oil (ISO-VG32 equivalent) or air			
Max. working pressure MPa	25			
Allowable rotations	Varies depending on fluid pressure (refer to **page → 272** for details on allowable rotations.)			
Operating temperature °C	0 ~ 70			
Piping port size	Rc1/4 (body lower surface is manifold piping)			
Mass kg	4.9	6.1	10.9	14.9

4 circuits

WRA4F

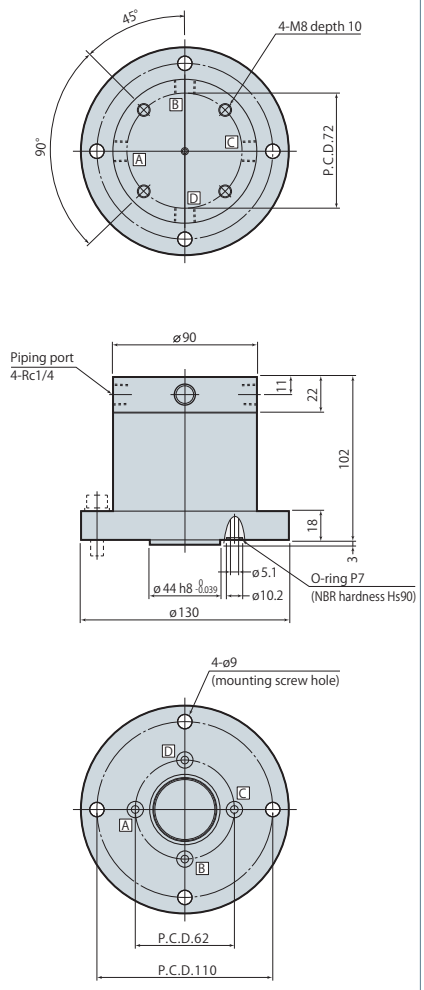

Each piping port is marked with code A through D. The mounting surface finish must be no rougher than Rz6.3 (ISO4287:1997).

6 circuits

WRA6F

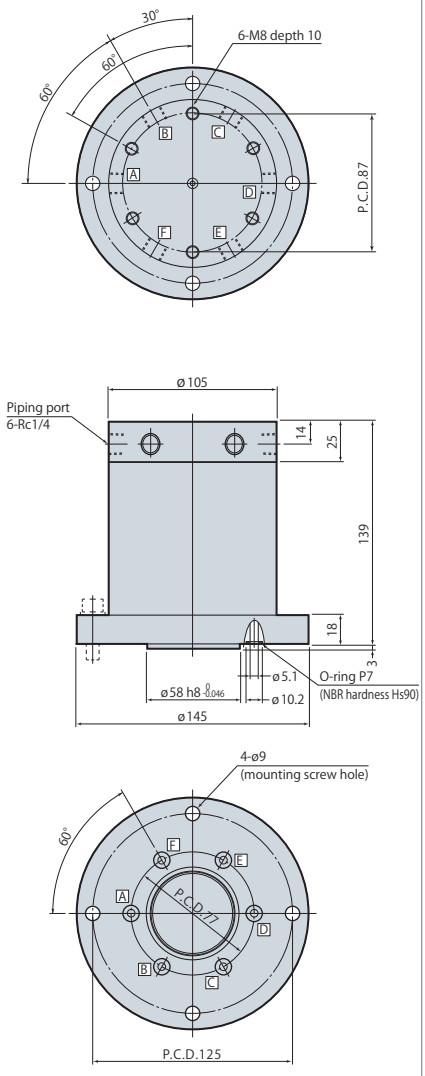

Each piping port is marked with code A through F. The mounting surface finish must be no rougher than Rz6.3 (ISO4287:1997).

8 circuits

WRA8F

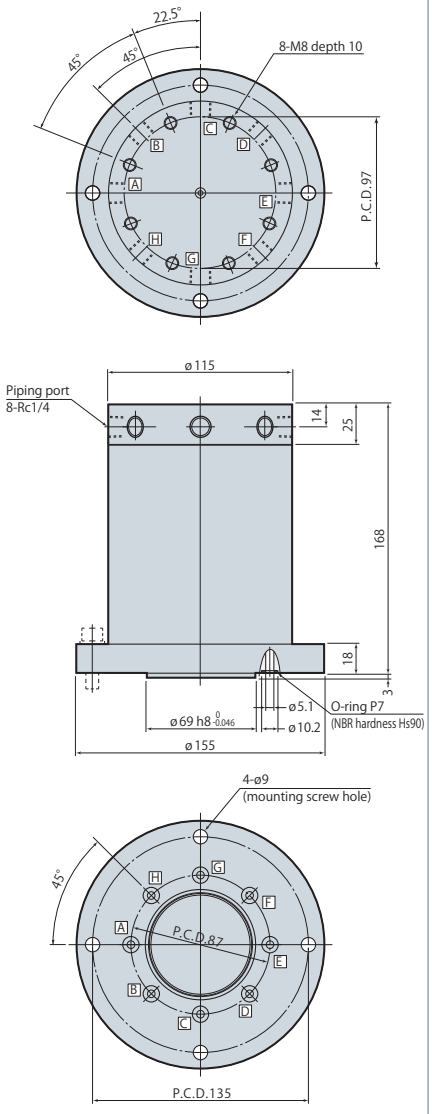

Each piping port is marked with code A through H. The mounting surface finish must be no rougher than Rz6.3 (ISO4287:1997).

Mounting screws are not included.