TA2804

Temperature transmitter

TA-030FLEC01- - /US

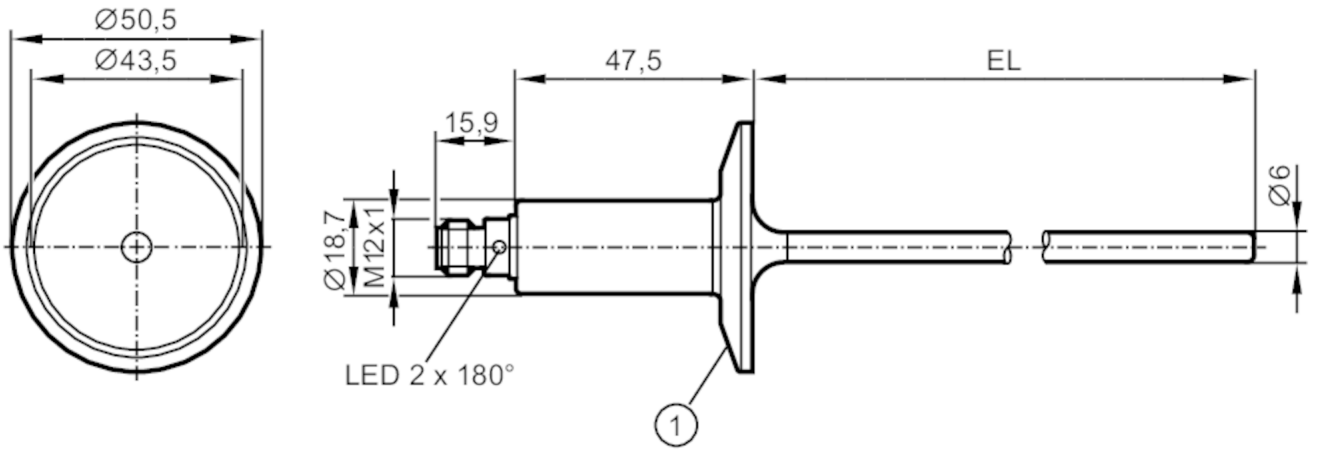

1 1.5" Clamp ISO 2852

EC 1935/2004 EHEDG Certified FCM IO-Link

Product characteristics		
Number of inputs and outputs		Number of analog outputs: 1
Process connection		Clamp DN25...DN40 (1...1,5") DIN 32676 (ISO 2852)
Installation length EL	[mm]	30
Application		
Measuring element		1 x Pt 1000; (to DIN EN 60751, class A)
Media		liquids and gases
Pressure rating	[bar]	100
Vacuum resistance	[mbar]	-1000
MAWP (for applications according to CRN)	[bar]	55
Electrical data		
Operating voltage	[V]	18...32 DC; (cULus - Class 2 source required)
Current consumption	[mA]	< 50
Protection class		III
Reverse polarity protection		yes
Power-on delay time	[s]	2
Inputs / outputs		
Number of inputs and outputs		Number of analog outputs: 1
Outputs		
Total number of outputs		1
Output signal		analog signal; IO-Link; (configurable)
Number of analog outputs		1
Analog current output	[mA]	4...20
Max. load	[Ω]	250; ((18...19 V); 19...32 V: 300 Ω)
Short-circuit protection		yes
Overload protection		yes

TA2804

Temperature transmitter

TA-030FLEC01- - /US

Measuring/setting range			
Factory setting		0...350 °F	
Resolution			
Resolution of analog output	[K]	0.04	
Accuracy / deviations			
Precision analog output	[K]	± 0,3 + (± 0,1 % MS)	
Temperature coefficient [% of the span / 10 K]		0,1; (In case of deviation from the reference condition 25 ± 5 °C)	
Reaction times			
Dynamic response T05 / T09	[s]	< 0,5 / < 2	
Interfaces			
Communication interface		IO-Link	
Transmission type		COM2 (38,4 kBaud)	
IO-Link revision		1.1	
Operating conditions			
Ambient temperature	[°C]	-25...80	
Note on ambient temperature		at medium temperature: < 160 °C	
		-25...60 °C	
		at medium temperature: < 200 °C	
Storage temperature	[°C]	-40...100	
Protection		IP 67; IP 68; IP 69K	
Tests / approvals			
EMC		DIN EN 61000-6-2	
		DIN EN 61000-6-3	
Shock resistance		DIN IEC 68-2-27	50 g (11 ms)
Vibration resistance		DIN IEC 68-2-6	10 g (10...2000 Hz)
MTTF	[years]	232	
Note on approval		Factory certificate available as download at www.factory-certificate.ifm	
UL approval		UL approval number	K002
Mechanical data			
Weight	[g]	226	
Dimensions	[mm]	Ø 18.71	
Material		stainless steel (1.4404 / 316L); PEI; FKM	
Materials (wetted parts)		stainless steel (1.4404 / 316L) electropolished	
Process connection		Clamp DN25...DN40 (1...1,5") DIN 32676 (ISO 2852)	
Surface characteristics Ra/Rz of the wetted parts		Ra: < 0.8	
Probe diameter	[mm]	6	
Installation length EL	[mm]	30	
Remarks			
Remarks		MS = set measuring span	
		The values for accuracy apply to flowing water.	
Pack quantity		1 pcs.	

TA2804

Temperature transmitter

TA-030FLEC01- - /US

Electrical connection

Connector: 1 x M12; coding: A



Connection

